Browning®

McGILL®

ROLLWAY®

SEALMASTER®

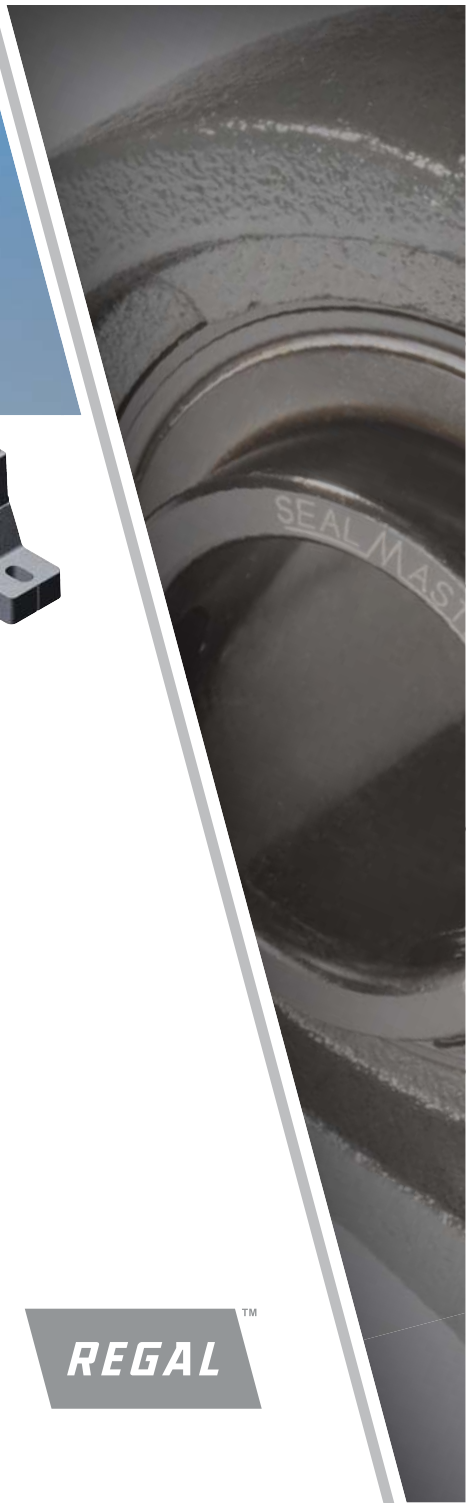

BEARING PRODUCT CATALOG

CAM FOLLOWER BEARINGS
NEEDLE ROLLER BEARINGS
CYLINDRICAL ROLLER BEARINGS
THRUST ROLLER BEARINGS
MOUNTED BALL BEARINGS
MOUNTED ROLLER BEARINGS
ROD END & SPHERICAL PLAIN BEARINGS
CORROSION RESISTANT BEARINGS
SPECIALTY & AEROSPACE BEARINGS

REGAL™

The Regal Power Transmission Solutions Advantage

Regal Power Transmission Solutions brings you more than a century of technology and engineering experience. As a Regal Power Transmission Solutions business, we are part of one of the world's leading suppliers of innovation and insight, providing solutions to customers around the world. Backed by extraordinary technological capabilities and resources, we can deliver customized, competitively valuable solutions that meet the unique needs of each of our customers.

Time-tested Brand Performance

Regal Power Transmission Solutions is a family of respected product brands that supply a variety of power transmission components designed to increase both uptime and productivity. Each of our brands brings years of time-tested reliability and proven performance results. Together they deliver a product line unparalleled in its breadth.

Founded in 1886, Browning is the world leader in V-belt drives and helical shaft-mounted speed reducers. Browning also offers a broad range of other products, including gearing, mounted ball bearings, mounted roller bearings and sprockets.

Founded in 1958 in Spain, Jaure is a leader in the European marketplace. Jaure provides highly engineered couplings for industries ranging from steel and paper, hoisting to windmills and marine applications.

Founded in 1920, Kop-Flex brings over 80 years of design and application experience to a wide range of industries. Kop-Flex products include gear, disc and resilient shaft couplings.

Founded in 1905, McGill patented the CAMROL® cam-follower bearing, which today is offered in more than 1,400 different combinations and configurations. McGill products also include aerospace bearings, needle and spherical bearings.

Founded in 1880, Morse is well known for its performance-proven roller-chain drives, clutches, worm-gear speed reducers and couplings.

Founded in 1908, Rollway provides over 2,000 different types of cylindrical roller bearings, cylindrical and tapered thrust bearings and extra-large roller bearings.

Founded in 1935, Sealmaster is the industry's preferred bearing product, known for its premium-quality mounted ball-bearing line, as well as its mounted roller bearings.

Founded in 1985, System Plast S.p.A. is a global supplier of steel and engineered plastic conveying chains and chain tracks, modular plastic belts, composite housed bearings and Valu Guide® conveyor components and guide rails.

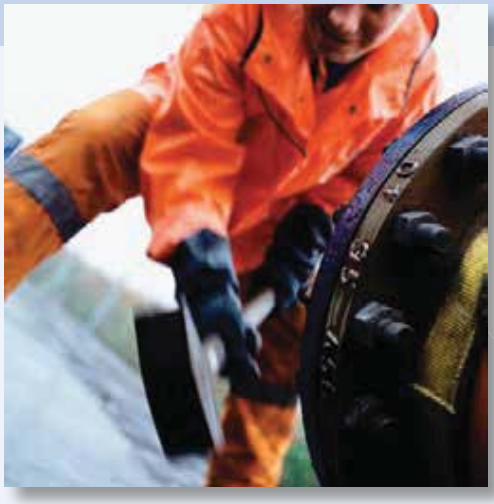

A History of Innovation

Our tradition of innovation goes far beyond our product enhancements. We've been at the forefront in offering across-the-board improvements in everything from manufacturing techniques to online tools as well as our Customer Solution and Innovation Centers.

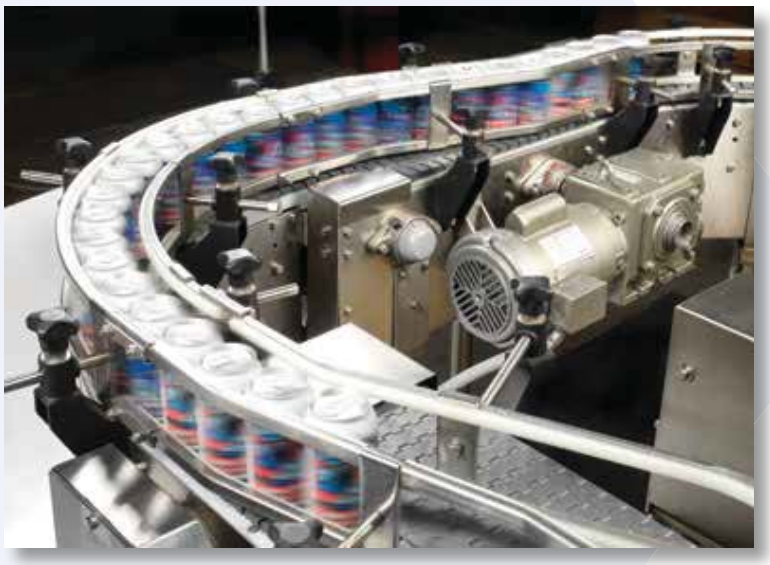

Manufacturing

Our lean-manufacturing capabilities, coupled with our combined engineering expertise and our global facilities, lets us deliver the solutions you need – when and where you need them. In addition, our bearings group continues to advance its assemble-to-order (ATO) capabilities. The result? Fast, accurate production that outpaces industry standards. Meanwhile, our coupling operation's engineered to order (ETO) process offers specific customer application solutions.

Online Tools

Our EDGE® Online industry-leading consultative website (www.RegalPTS.com) offers quick, concise and complete access to a wide range of support services, including:

- eCatalog
- Product selection
- Engineered solutions
- Smart interchange
- Product literature
- CAD templates
- EDGE JIT – a seamless, web-based program that selects drives at the lowest transactional costs
- eLINK – a transaction tool that lets you instantly contact us for messages and updates on:
  - Stock/price checks
  - Order status
  - Shipment tracking
  - Order entry
  - Quote center
  - Shopping list (favorites)

Training

PT University® online training program helps make sure that your personnel receive the training they require. Regal Power Transmission Solutions provides comprehensive, high- quality product training for our customers. Our cutting edge training tools, coupled with our experienced training personnel, deliver unsurpassed product knowledge to customers everywhere. We can tailor training to programs that best fit your needs, including online and instructor-led courses.

Technical Support

For added technical support, we provide:

- Research & design – Regal Power Transmission Solutions spends 3.5% of its total revenue on R&D
- Six global technical support centers
- International technical support
- Around-the-clock service availability, via our Application Engineering Department (800-626-2093), e-mail or online chat

Channel Partners

Regal Power Transmission Solutions has distribution channel partners throughout the world offering a wide variety of value-added services. For a full listing of our authorized distributors, technical support centers and online tools, visit www.RegalPTS.com

The Power of People

The real innovation behind our products comes from our people. Our engineers study your unique industry challenges as thoroughly as their own areas of expertise. Meanwhile, our sales force and field-service personnel also work hard to understand the challenges of every customer, in every marketplace and industry. Finally, our customer service representatives are always ready and available to answer any questions, solve problems or deal with any issues.

About This Catalog

Inside this catalog, you will find the common range of unmounted and mounted bearing products offered by Regal Power Transmission Solutions, carrying the globally recognized brands: Browning, McGill, Rollway and Sealmaster.

To help you easily locate the information you are looking for this catalog has been laid out in a consistent format between the various brands and bearing types. The structure of the catalog is as follows:

Bearing Basics

This section includes general engineering information pertaining to bearing types, selection criteria, standard formulas used across the various bearing types such as L10, lubrication methods and types.

Product Sections

The following information typically appears in each product section.

Product Type Overview

A short descriptive narrative of the bearing types found in this section.

Section Table of Contents

A pictorial and descriptive table allowing you to narrow down the bearing type required for specific application or design need.

Exploded Product View

An exploded product view highlighting various critical components of the bearing.

Product Nomenclature

A breakdown of the part nomenclature (description) as a guide to easily understand the part numbers, and shows the standard and common optional features.

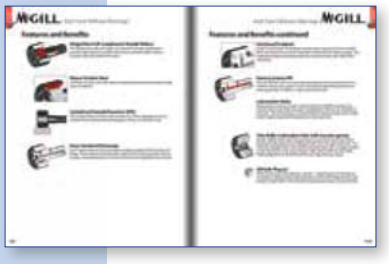

Standard Product Features & Benefits

Additional details of the key components highlighted in the exploded view detailing the specific feature and reviewing why it is a benefit to you the user.

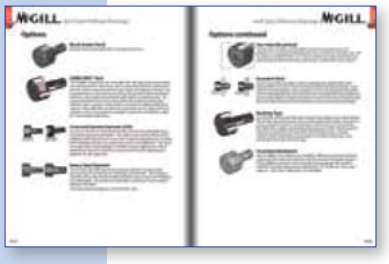

Optional Product Features & Benefits

A listing of the common options available to further enhance bearing performance in your application or features tailored to specific applications such as high speed, high temperature, low temperature, etc.

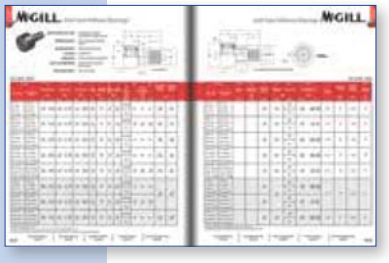

Product Tables

- A 3D Model of the bearing product at the top of the page to clearly identify what the product looks like.
- Basic Product Information to help guide the user in understanding the key product attributes.
- A 2D Line Drawing with dimensional call outs that have been standardized across product types for easy comparisons.
- Table with inch and metric dimensions listing the critical dimensions for design and selection as shown in the 2D line drawing, including the bearing dynamic capacity, and mass in lbs. and kgs.
- Special notes or instructions pertaining to the specific product shown.

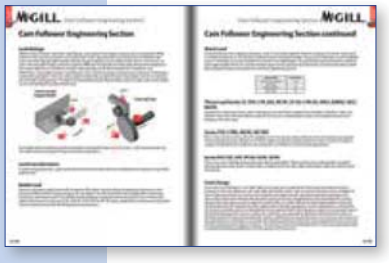

Engineering Section

Technical information pertaining to the information found in the section. The technical information will vary slightly by product type such as speed limits, lubrication recommendations, series codes, internal and mounting clearances, and mounting instructions.

Table of Contents


McGILL
CF 2
McGILL MR 32 SS
ROLLWAY T 16060 USA
ROLLWAY NJ 2326 E USA
ROLLWAY NJ 2326 E USA
McGILL
SB 22207 W33 SS

Bearing Basics

Table of Contents

Bearing Selection

Introduction

The following general information will serve the purpose of aiding the machine designer or bearing user when applying the bearings covered in this catalog. Additional data dealing solely with each type of bearing is found in each respective section. Cross references are made whenever necessary. Engineering data should be carefully considered in selecting the proper design and size bearing.

For those applications where unusual or abnormal operating conditions exist, it is advisable to consult Application Engineering for recommendations. Examples of such conditions requiring special consideration are those involving high or low temperatures, misalignment, shaft and housing fits that might cause the bearing to be too tightly fitted internally after mounting, vibration, moisture, contamination, etc.

Application Considerations

The proper selection and application of power transmission products and components, including the related area of product safety, is the responsibility of the customer. Operating and performance requirements and potential associated issues will vary appreciably depending upon the use and application of such products and components. The scope of the technical and application information included in this publication is necessarily limited. Unusual operating environments and conditions, lubrication requirements, loading supports, and other factors can materially affect the application and operating results of the products and components and the customer should carefully review its requirements. Any technical advice or review furnished by Regal Power Transmission Solutions and its divisions with respect to the use of products and components is given in good faith and without charge, and Regal assumes no obligation or liability for the advice given, or results obtained, all such advice and review being given and accepted at customer's risk.

For a copy of our **Standard Terms and Conditions of Sale, Warranty, Limitation of Liability and Remedy**,please contact Regal Power Transmission Solutions customer service, 1-800-626-2120. These terms and conditions of sale, disclaimers and limitations of liability apply to any person who may buy, acquire or use an Regal Power Transmission Corporation product referred to herein, including any person who buys from a licensed distributor of these branded products.

Nuclear Applications
Goods and/or Services Sold Hereunder are not for use in any Nuclear and Related Applications

Buyer accepts goods and/or services with the foregoing understanding, agrees to communicate the same in writing to any subsequent purchaser or users and to defend, indemnify and hold harmless Seller from any claims, losses, suits, judgments and damages, including incidental and consequential damages, arising from such use, whether the cause of action be based in tort, contract or otherwise, including allegations that the Seller's liability is based on negligence or strict liability.

Bearing Selection Continued

Bearing Selection

Before beginning the bearing selection process for a particular application it is important to have a good idea of where the bearing will be installed, what its purpose will be, what operating conditions will the bearing be expected to function in, and a desired bearing life. Each bearing type has certain characteristics which make it suitable for a certain application(s). Having comprehensive knowledge of these requirements will aid in bearing selection. In most cases there are several factors to consider when choosing a bearing type. Therefore the following information is to be used only as a guide. In the selection process the following factors must be considered:

1. **Equipment constraints**
2. **Load – Magnitude and Direction**
   - Magnitude
   - Direction
     - ◊ Radial
     - ◊ Thrust
     - ◊ Combined
3. **Misalignment**
   - Static
   - Dynamic
4. **Expansion**
5. **Noise**
6. **Vibration and shock loading**
7. **Environment**
8. **Bearing Type**

Equipment Constraints

Sometimes, bearing bore diameter and housing type are predetermined by the equipment and shaft diameter with which the bearing will be used. Small diameter shafts typically are used when light loads are transferred and may lead to the choice of a ball bearing. Higher loads typically dictate larger shaft diameters and then taper or spherical roller bearings may be needed. For mounted bearings, equipment constraints can also dictate what type of housing style can be used (i.e. pillow block, 2-bolt flange, 4-bolt flange, etc.).

Load – Magnitude and Direction

Load magnitude typically dictates size of bearing required but it can also affect the type of bearing. Ball bearings work well in light to moderate loads, roller bearings work well for moderate to heavy loads. Bearings with a full complement of rollers are generally better for higher loads than a caged bearing of the same size and full complement bearings are also recommended for applications with oscillatory rotation.

Load direction can be radial, axial, or a combination of these two directions. These directions along with load magnitude are deciding factors in selection of bearing type.

Bearing Selection Continued

Radial loading is the most common type of bearing load and is defined as a load perpendicular, or 90 degrees to the shaft centerline. Most ball and roller bearings are designed to accept primarily radial loads.

Thrust, or axial, loading is defined as loading in the direction through the shaft centerline. The ability of the bearing to carry a thrust load is dependent on the bearing contact angle geometry. The larger the contact angle the more thrust load that can be carried. Typically, tapered roller and double row spherical roller bearings are better suited for applications with a higher degree of thrust load.

Combination loading consists of both a radial and a thrust load acting simultaneously on the bearing. When combination loads are acting on a bearing it is necessary to determine an equivalent radial load when calculating bearing life.

Misalignment

Bearing misalignment is a result of angular misalignment between the shaft and housing. This misalignment comes in two different forms, static and dynamic. Static misalignment is the outcome of bearings that are mounted on different planes causing an angular shaft displacement and resulting in the bearing operating under a fixed misalignment angle. Mounted ball bearings, certain series mounted roller bearings, and spherical rollers bearings have a design feature that allows them to accommodate a limited degree of fixed misalignment. Dynamic misalignment is an eccentric shaft rotation caused by shafting imperfections and resulting in the bearing operating under a varying misalignment angle. Spherical roller bearings are typically best suited for applications involving dynamic misalignment.

Static System Misalignment

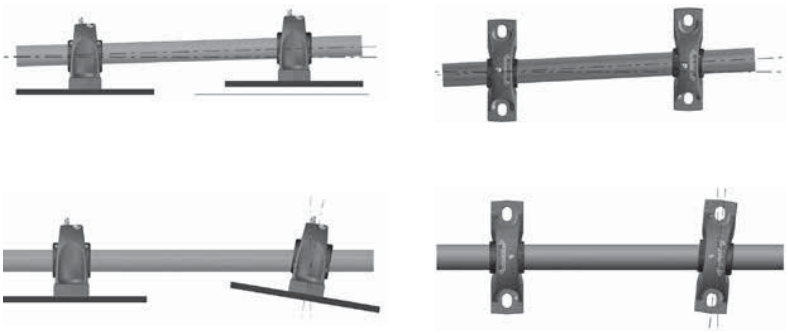

Dynamic System Misalignment

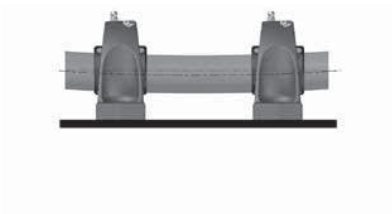

Bearing Selection Continued

Each bearing type is capable of accommodating a certain amount of either static, dynamic, or combination misalignment. When application misalignment exceeds the allowable limit for the particular bearing, increased contact stresses between bearing rolling elements and raceways occurs and bearing life is reduced. Individual product sections contain additional information regarding what types and degrees of misalignment each bearing type is capable of handling.

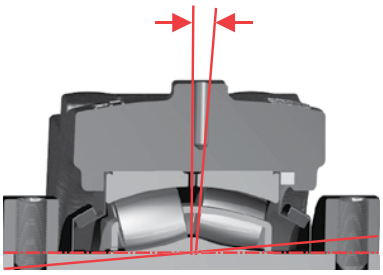

Example of Sealmaster Mounted Spherical Roller Bearing Misalignment

Expansion

For applications in which shaft linear growth must be accommodated, this expansion must be taken into account with either the bearing mounting method or bearing type selection. Typically this expansion is due to the difference in thermal changes in the shaft versus that in the support structure. Therefore change in length can be determined using standard thermal expansion equations. The maximum temperature difference between the shaft and the support structure should be used in the calculation of the shaft growth. Likewise, consideration must be given to the shaft and structure materials, as different materials can have different rates of expansion or contraction.

To allow for shaft expansion, some applications will require the bearing to be of an expansion type. An expansion type bearing is one that has an internal design feature which allows it to accommodate axial expansion. Before installation, make sure proper linear shaft expansion is accounted for. Expansion units should be placed in a location where relative movement between the bearing insert and the housing can be tolerated. For most applications using expansion type units, the fixed unit (non-expansion unit) is placed at the drive end of the shaft. Not providing expansion where necessary may result in undesirable thrust loads, thus reducing bearing operating life.

Example of Sealmaster Mounted Spherical Roller Bearing Expansion and Non-Expansion

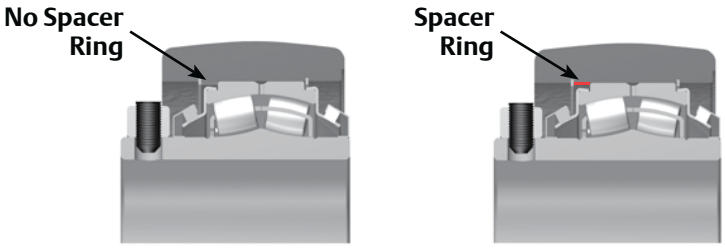

Expansion **Non-Expansion**

For more information on Bearing Basics, please contact Application Engineering (800) 626-2093.

Bearing Selection Continued

Noise

Noise sensitive applications such as fans require smooth running bearings. These are typically low duty environments which makes ball bearings a good choice. Concentric locking mechanisms are preferred to keep vibration at a minimum, but not required. Regal Power Transmission Solutions offers a special suffix that can be applied to many mounted ball bearing products for air handling applications. This option offers a loose fit between the bearing insert and housing for easy self-aligning, as well as noise testing of all units.

Vibration and Shock Loading

Vibration and shock loading present in vibratory conveyors, shakers, and other heavy industrial applications transfer large forces to bearings and accompanying raceways. These loads create large stresses at the interface between the rolling elements and raceways and can cause considerable damage and a reduction of bearing life. Roller bearings may be a good selection because of their larger supporting contact area with the bearing races. This allows loads to be carried over a larger area thus reducing stress. Special housing fits for mounted bearings can be added from the factory to aid in longer bearing life.

Environment

Environmental factors such as solids contamination (particle type, size, quantity), exposure to moisture (water, acid caustic),and thermal conditions are important variables in bearing selection. Bearing components (seals, grease, bearing material, etc.) can be modified in order to better suit a specialized application. Availability of special features may be affected by shaft size, bearing type, and housing type therefore this must be considered in the bearing selection process. Individual product sections contain additional information regarding these specialized features and availability.

Bearing Type

Radial Ball Bearings

Radial ball bearings create a fairly small elliptical contact between the ball-path and rolling element thus distributing loads across a small area. Surface contact is minimized and less friction and heat is generated which allows ball bearings a higher speed range. This small contact area also limits ball bearings to accepting only light to moderate loads. Radial ball bearings have a zero degree free contact angle but can accept light thrust loads (in combination with a radial load) due to the shape geometry of their raceways. Mounted ball bearing units have some degree of external static self-aligning capability (the bearing insert can misalign with respect to the housing). Mounted ball bearings come in a variety of housing styles and features to suit a wide variety of applications.

Bearing Selection Continued

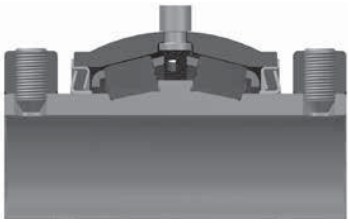

Tapered Radial Roller Bearings

Tapered radial roller bearings create a line contact between the raceway and rolling element distributing loads across a larger area. Also, a double row provides twice as many rolling elements available to carry bearing load which increases bearing load capacity. Because tapered roller bearings are set at an angle, they can accept heavy loads from both the radial (Y) and thrust (X) directions. This makes them ideal for tough applications such as mining, bulk material handling, and off-highway applications. Many mounted tapered roller bearing units are similar to mounted ball units in that they are externally self aligning to accommodate some static misalignment. There are a variety of housing styles and features available.

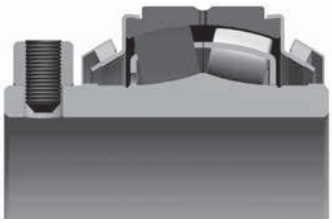

Spherical radial roller bearings

Spherical radial roller bearings have a barrel shaped profile. This combined with a curved raceway allows relative motion between the rolling elements and raceways (internally self-aligning). This attribute makes them ideal for application where both static and dynamic misalignment is present. Spherical roller bearings create an elliptical shaped contact area that is larger than a ball bearing. Single row design spherical roller bearings should not be used in combined loading applications when the thrust load exceeds 20% of the applied radial load. Mounted spherical roller bearings employ a double row design, which are set at an angle and can accept a limited degree of thrust load in combination with radial load. Due to some sliding that occurs at the bearing and raceway interface, spherical roller bearings are generally not suitable for higher speed applications.

Needle Radial Roller Bearing

A needle radial roller bearing is a cylindrical roller where the length of the roller is significantly larger than the diameter. The rollers make a large line contact with the raceways, allowing them to accept fairly high radial load. Needle roller bearings also do not have a contact angle and are not recommended in applications where thrust loading is present. If high thrust loads are present, provisions should be put in place to allow bearings better suited to handle the thrust loads. Needle bearing assemblies typically consist of an inner race (or sometimes a precision shaft), a needle cage which orients and contains the needle rollers, the needle rollers themselves, and an outer race. The needle cage is sometimes omitted and a full complement of rollers is used instead for oscillatory and high load applications.

Bearing Selection Continued

Cylindrical Radial Roller Bearings

Cylindrical radial roller bearings are similar in design to needle roller bearing but the dimensions of diameter and roller length are closer in magnitude. The rolling elements create a line contact with the raceways and can handle relatively high radial loads. These bearings typically use cage separated rollers which allows for higher operating speeds. Cylindrical roller bearings can also accept incidental to light thrust loads. Rollway Cylindrical roller bearings are crowned to maximize load carrying potential, reduce edge loading, and tolerate some minor misalignment.

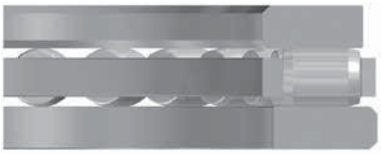

Thrust Cylindrical Roller

Thrust cylindrical roller and thrust spherical roller bearings use rolling elements as described above. However, instead of radial rings for raceways, thrust bearings use plate rings so that these designs can be applied to support pure thrust loads. These designs do not support radial loads. The cylindrical roller type provides a fairly rigid construction capable of supporting fairly heavy thrust loads. The spherical roller type can also support heavy thrust loads, and can also accommodate some misalignment.

Rod ends

Rod ends are designed to provide an efficient smooth transfer of motion in a wide variety of applications and equipment. This motion is usually associated with various types of linkage controls. Commonly referred to as plain or sliding bearings, they are designed primarily to assist and provide motion transfer, support a load, allow for angular motion and angular misalignment.

Rod ends can be joined together or connected with a threaded rod or tube to form linkage assemblies allowing design engineers flexibility in transferring motion between points with long center distances. There are two surface areas in contact rubbing against each other, therefore normal operation of rod ends results in wear of the raceways leading to fatigue or fracture of the outer member. Give consideration to this in the design of the equipment. In general, rod ends are designed to accept radial loads and not intended to carry thrust loads. Applications of rod ends with thrust loading should be reviewed with Application Engineering.

Spherical Plain Bearings

Spherical plain bearings provide a similar function as rod ends and must be supported in a housing. Spherical bearings are typically more capable of supporting higher loads versus an equivalent rod end bore size. This occurs because rod end load capacity is controlled by the head and shank geometry. Spherical bearings have a larger bearing area and generally are less restricted by the housing material or dimensions in which they are mounted. Static thrust rating of plain spherical bearings is 20% of the static radial rating of each unit but proper housing design is needed to support the bearing.

Bearing Selection Guide

The following chart can be used as a reference guide when working through the selection process. More detailed information on each bearing type as well as the available housing and seal options can be found in sections dealing with the individual bearing types.

	Bearing Type	Pure Radial Loading	Pure Axial Loading	Combination Loading	High Speeds	Static Self-Aligning Capability	Dynamic Self-Aligning Capability
	Mounted Ball Bearings	●	◒	◒	●	◒	○
	Mounted Taper Roller Bearings	●	◒	●	◒	◒	○
	Mounted Spherical Roller Bearings	●	◒	●	◒	●	●
	Cylindrical Roller Bearings	◒	varied based on design	○	●	○	○
	Unmounted Needle Bearings	●	○	◒	◒	○	○
	Rod Ends	●	◒	◒	◒	◒	◒
	Plain Spherical Bearings	●	◒	◒	◒	◒	◒
	Cylindrical Thrust Bearings	○	●	○	○	○	○
	Tapered Thrust Bearings	○	●	○	◒	○	○
	Journal Roller Bearings	●	○	○	◒	○	○

○ = Not Recommended

Poor ◒ ◒ ◒ ◒ ● Best

For more information on Bearing Basics, please contact Application Engineering (800) 626-2093.

Load Ratings and Life

Introduction

The following general information will serve the purpose of aiding the machine designer or bearing user when applying bearings covered by this catalog. Additional data dealing solely with each type of bearing is found in each respective section. Cross references are made whenever necessary. Engineering data should be carefully considered in selecting the proper design and size bearing.

For those applications where unusual or abnormal operating conditions exist, it is advisable to consult Application Engineering for recommendations. Examples of such conditions requiring special consideration are those involving high or low temperatures, misalignment, shaft and housing fits that might cause the bearing to be too tightly fitted internally after mounting, vibration, moisture, contamination, etc.

Load Ratings

The basic load rating or Basic Dynamic Rating as defined by the American Bearing Manufacturers Association (ABMA) is that calculated, constant radial load which 90% of a group of apparently identical bearings with stationary outer ring can theoretically endure for a Rating Life. For bearing types other than tapered roller, the basic rating life is one million revolutions (33 1/3 RPM for 500 hours). For tapered roller bearings, the basic rating life is ninety million revolutions. The basic load rating is a reference value only, the basic rating life value having been chosen for a means of life calculation.

It is not anticipated that bearing loading equal to the Basic Dynamic Rating would normally be applied while the bearing is rotating. Bearings in this catalog should not normally be subjected to dynamic loads greater than 50 percent of the Basic Dynamic Rating. Consult Application Engineering if such conditions exist.

Bearing Life – L10

Bearings which have been properly sized for the application, solidly mounted, lubricated, and protected will operate with minimal, if any, internal wear until fatigue of the rings or rolling elements takes place. Fatigue is the first evidence of spalling of the rolling contact surfaces of these parts, and occurs because of the repeated stressing of the contacts.

The “life” of an individual bearing is defined as the number of revolutions (or hours at a given constant speed) which the bearing runs before the first evidence of fatigue develops in the material of either ring or of any of the rolling elements. The L10 or “rating life” of a group of apparently identical roller bearings is defined as the number of revolutions (or hours at some given constant speed) that 90% of the group of bearings will complete or exceed before the first evidence of fatigue develops.

Load Ratings and Life

Life Calculations

The L10 (rating) life for any given application and bearing selection can be calculated in terms of millions of revolutions by using the bearing Basic Dynamic Rating (BDR) and applied radial load (or, equivalent radial load in the case of radial bearing applications having combined radial and thrust loads). The L10 life for any given application can be calculated in terms of hours, using the bearing Basic Dynamic Rating, applied load (or equivalent radial load) and suitable speed factors, by the following equation:

$$L_{10} = \left(\frac{C}{P}\right)^{P} \times \frac{1{,}000{,}000}{60 \times n} = \left(\frac{C}{P}\right)^{P} \times \frac{16667}{n}$$

Where: L_{10} = The # of hours that 90% of identical bearings under ideal conditions will operate at a specific speed and condition before fatigue is expected to occur.
C = Basic Dynamic Rating (lbs) 1,000,000 Revolutions
P = Constant Equivalent Radial Load (lbs)
p = Exponent for life
3 for ball bearings
10/3 for roller bearings
n = Speed (RPM)

For thrust cylindrical roller and thrust tapered roller bearings the above equations change to:

$$L_{10} = \left(\frac{C}{P}\right)^{10/3} \times \frac{1{,}000{,}000}{60 \times n} = \left(\frac{C}{P}\right)^{10/3} \times \frac{16667}{n}$$

Where: L_{10} = The # of hours that 90% of identical bearings under ideal conditions will operate at a specific speed and condition before fatigue is expected to occur.
C = Basic Dynamic Thrust Rating (lbs) 1,000,000 Revolutions
P = Constant Equivalent Thrust Load (lbs)
p = 10/3
n = Speed (RPM)

The BDR for tapered roller bearings is based on 90 million revolutions instead of one million for other types of bearings. Therefore there is a specific equation used to calculate their L10 life.

$$L_{10} = \left(\frac{C90}{P}\right)^{10/3} \times \frac{90{,}000{,}000}{60 \times n} = \left(\frac{C90}{P}\right)^{10/3} \times \frac{1{,}500{,}000}{n}$$

Where:
Where: L_{10} = The # of hours that 90% of identical bearings under ideal conditions will operate at a specific speed and condition before fatigue is expected to occur.
C90= 2-Row Basic Dynamic Rating (lbs) 90,000,000 Revolutions
P = Constant Equivalent Radial Load (lbs)
n = Speed (RPM)

* For speeds less than 50 RPM, use 50 RPM when doing L10 calculations.

Note: L10 life does not apply to rod ends and plain spherical bearings due to the sliding motion between components versus a rolling motion. Normal operation of these types of bearings results in wear of the raceways or fatigue or fracture of the outer member. Give consideration to this in the design of the equipment.

For more information on Bearing Basics, please contact Application Engineering (800) 626-2093.

Load Ratings and Life Continued

Additionally, the ABMA provides application factors for all types of bearings which need to be considered to determine an adjusted Rated Life (Lna). L10 life rating is based on laboratory conditions yet other factors are encountered in actual bearing application that will reduce bearing life. Lna life rating takes into account reliability factors, material type, and operating conditions.

$$L_{na} = a_1 \times a_2 \times a_3 \times L_{10}$$

Where:

L_{na} = Adjusted Rated Life.

a_1 = Reliability Factor. Adjustment factor applied where estimated fatigue life is based on reliability other than 90% (See Table No 1).

Table No. 1 Life Adjustment Factor for Reliability

Reliability %	L_{na}	a_1
90	L10	1
95	L5	0.62
96	L4	0.53
97	L3	0.44
98	L2	0.33
99	L1	0.21
50	L50	5

a_2 = Material Factor. Life adjustment for bearing race material. Regal Power Transmission Solutions bearing races are manufactured from bearing quality steel. Therefore the a_2 factor is 1.0.

a_3 = Life Adjustment Factor for Operating Conditions. This factor should take into account the adequacy of lubricant, presence of foreign matter, conditions causing changes in material properties, and unusual loading or mounting conditions. Assuming a properly selected and mounted bearing having adequate seals and lubricant operating below 250°F and tight fitted to the shaft, the a_3 factor should be 1.0.

Mounted bearings are typically “slip fitted” to the shaft and rely on design features such as the inner race length and locking device for support. ABMA recommends an a_3 factor of .456 for “slip fit” ball bearings.

Vibration and shock loading can act as an additional loading to the steady expected applied load. When shock or vibration is present, an a_3 Life Adjustment Factor can be applied. Shock loading has many variables which often are not easily determined. Typically, it is best to rely on one’s experience with the particular application. Consult Application Engineering for assistance with applications involving shock or vibration loading.

The a_3 factor takes into account a wide range of application and mounting conditions as well as bearing features and design. Accurate determination of this factor is normally achieved through testing and in-field experience. Regal Power Transmission Solutions offers a wide range of options which can maximize bearing performance. Consult Application Engineering for more information. Example calculations can be found in the individual engineering sections at the end of the various product sections.

Load Ratings and Life Continued

Variable Load Formula

Root mean load (RML) is to be used when a number of varying loads are applied to a bearing for varying time limits. Maximum loading still must be considered for bearing size selection.

$$\text{RML}^* = \sqrt[P]{\frac{(L_1{}^P N_1) + (L_2{}^P N_2) + (L_3{}^P N_3)}{100}}$$

Where:

p = Exponent for life
3 for ball bearings
10/3 for roller bearings

L_1, L_2, etc. = Load in pounds

N_1, N_2, etc. = Percent of total time operated at loads L_1, L_2, etc.

* Apply RML to rating at mean speed to determine resultant life.

Mean Speed Formula

The following formula is to be used when operating speed varies over time.

$$\text{Mean Speed} = \frac{S_1N_1 + S_2N_2 + S_3N_3}{100}$$

S_1S_2, etc = Speeds in RPM

N_1N_2, etc = Percentage of total time operated at speeds S_1S_2, etc

Bearing Life In Oscillating Applications

The equivalent rotative speed (ERS) is used in life calculations when the bearing does not make complete revolutions during operation. The ERS is then used as the bearing operating speed in the calculation of the L10 (Rating) Life. The formula is based on sufficient angular rotation to have roller paths overlap.

ERS = Equivalent Rotative Speed

N = Total number of degrees per minute through which the bearing will rotate.

$$\text{ERS} = \frac{N}{360}$$

In the above formula, allowance is made for the total number of stress applications on the weakest race per unit time, which, in turn, determines fatigue life and the speed factors. When the oscillation angle is very small, fretting corrosion can take place. The theory behind fretting corrosion is best explained by the fact that the rolling elements in small angles of oscillation retrace a path over an unchanging area of the inner or outer races where the lubricant is prevented by inertia from flowing in behind the roller as the bearing oscillates in one direction. Upon reversal, this small area of rolling contact is traversed by the same roller in the dry state. The friction of the two unlubricated surfaces causes fretting corrosion and produces failures which are unpredictable from a normal life standpoint. For applications with small angles of oscillation, it is recommended that it be reviewed with Application Engineering to select a bearing type that will help minimize potential fretting corrosion.

Load Ratings and Life Continued

With a given bearing selected for an oscillating application, the best lubrication means is a light mineral oil under positive flow conditions. With a light oil, there is a tendency for all areas in the bearing load zone to be immersed in lubricant at all times. The full flow lubrication dictates that any oxidized material which may form is immediately carried away by the lubricant, and since these oxides are abrasive, further wear tends to be avoided. If grease lubrication must be used, it is best to consult with either the bearing manufacturer or the lubricant manufacturer to determine the best possible type of lubricant. Greases have been compounded to resist the detrimental effect of fretting corrosion for such applications.

Static Load Rating

The "static load rating" for rolling element bearings is that uniformly distributed static radial load acting on a non-rotating bearing, which produces a contact stress of 580,000 psi for roller bearings and 609,000 psi for ball bearings, at the center of the most heavily loaded rolling element. At this stress level, plastic deformation begins to be significant. Experience has shown that the plastic deformation at this stress level can be tolerated in most bearing applications without impairment of subsequent bearing operation. In certain applications where subsequent rotation of the bearing is slow and where smoothness and friction requirements are not too exacting, a higher static load limit can be tolerated. Where extreme smoothness is required or friction requirements are critical, a lower static load limit may be necessary.

Minimum Bearing Load

Skidding, or sliding, of the rolling elements on the raceway instead of a true rolling motion can cause excessive wear. Applications with high speeds and light loading are particularly prone to skidding. As a general guideline, rolling element bearings should be radially loaded at least 2% of Basic Dynamic Rating for roller bearings and 1% of Basic Dynamic Rating for ball bearings. For applications where load is light relative to the bearings dynamic load rating, consult Application Engineering for assistance.

Load Ratings and Life Continued

Computing Bearing Loads

In the computation of bearing loads in any application of a Regal Power Transmission Solutions unit, the principal factor determining the selection of the unit is the equivalent radial load to which the bearing will be subjected. These radial loads result from any one or any combination of the following sources:

1. Weights of machine parts supported by bearings.
2. Tension due to belt or chain pull.
3. Centrifugal force from out of balance, eccentric or cam action.

The resulting load from any one, or any combination of the above sources is further determined by knowing:

1. The magnitude of the load.
2. Direction of the load.
3. The point of load application.
4. The distance between bearing centers.

Bearing loads are the result of force acting on the shaft. Direction, magnitude, and location with respect to the bearings must be considered when calculating bearing loads. The following cases are typical examples of loads encountered and methods of calculating bearing loads.

CASE #1
Drive Load Calculation

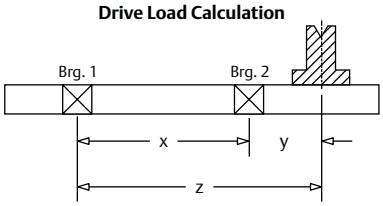

$$P = \frac{126{,}000 \times HP}{RPM \times d} \times K$$ = Apply P to Case 2, 3 or 4 if applicable

HP = horsepower
RPM = revolutions per minute
d = pitch of pulley in inches
K = constant for type of drive used
K = 1.5 for V-belts
K = 2 to 3 for flat transmission belts
K = 1.1 for chain drives

CASE #2
Cantilever and Drive

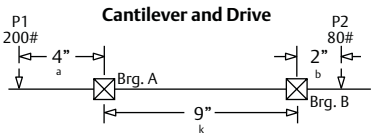

$$\text{Load on Bearing A} = \frac{P_1 \times (a + k) - (P_2 \times b)}{k}$$

$$= \frac{200 \times (4 + 9) - (80 \times 2)}{9}$$

= 271 lbs.

$$\text{Load on Bearing B} = \frac{P_2 \times (k + b) - (P_1 \times a)}{k}$$

$$= \frac{80 \times (9 + 2) - (200 \times 4)}{9}$$

= 9 lbs.

CASE #3
Straddle, Cantilever Drive

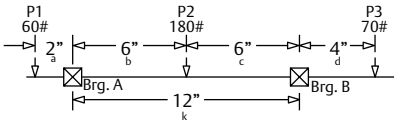

$$\text{Load on Bearing A} = \frac{P_1 \times (k + a) + (P_2 \times c) - (P_3 \times d)}{k}$$

$$= \frac{60 \times (12 + 2) + (180 \times 6) - (70 \times 4)}{12}$$

= 137 lbs.

$$\text{Load on Bearing B} = \frac{-(P_1 \times a) + (P_2 + b) + P_3 \times (k + d)}{k}$$

$$= \frac{-(60 \times 2) + (180 \times 6) + 70 \times (12 + 4)}{12}$$

= 173 lbs.

CASE #4
Straddle Mount, Cantilever Drive

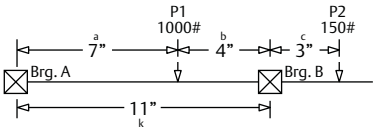

$$\text{Load on Bearing A} = \frac{(P_1 \times b) - (P_2 \times c)}{k}$$

$$= \frac{(1000 \times 4) - (150 \times 3)}{11}$$

= 323 lbs.

$$\text{Load on Bearing B} = \frac{(P_1 \times a) + (c + k) \times (P_2)}{k}$$

$$= \frac{(1000 \times 7) + (3 + 11) \times (150)}{11}$$

= 827 lbs.

CASE #5
Vibrating Drives

Load due to Centrifugal and Inertial Forces - In a shaker or gyrating screen bearing application, the load on the bearings is increased by sudden stopping, starting, and reversing of typically large loads. This can be expressed as a basic physical law:

Force = Mass x Accelerations

In order to use this law, we develop from it the following equation:

$$F = .000341 \times WR(RPM)^2$$

Where: F = Load of force in lbs.
W = Weight of rotating mass in lbs.
R = Radius of rotation or throw in feet
RPM = Shaft rotation in revolutions per minute

What is the centrifugal bearing load on a shaker screen which weighs 2,500 lbs., has a throw of 1/4 in. and whose shaft speed is 500 RPM?

$$F = .000341 \times 2{,}500 \times \frac{.250}{12} \times (500)^2 = 4{,}440 \text{ lbs.}$$

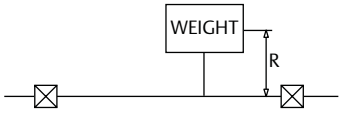

For more information on Bearing Basics, please contact Application Engineering (800) 626-2093.

Lubrication

Proper lubrication is essential to achieving desired bearing life. Each bearing application creates individually different requirements for adequate lubrication. To assist in selecting the lubricant and lubrication method, the following information is furnished as a general guide. Generally, the assistance of a qualified engineering representative from a lubricant company should be enlisted. If specific recommendations are required for a particular application, consult Application Engineering.

Lubricants are used to:

a. Reduce friction and wear
b. Reduce adhesion
c. Provide a barrier to contamination
d. Cool the moving elements
e. Protect against corrosion

Adequate lubrication is necessary in the rolling-contact areas, on contacts between rolling element and retainer, on contacts between a roller end and flange and on other areas where sliding takes place. Lubrication is required to reduce galling, adhesion, wear, corrosion, scuffing, welding and pitting. Of primary importance is adequate lubrication of the rolling element (Hertzian) contacts to avoid reduction of bearing fatigue life. These heavily loaded areas between the rolling elements and raceways impose the most critical requirement on the lubricant and its properties.

Lubricants of too low an initial viscosity or those too sensitive to temperature changes may induce shallow spalls under conditions of high slip (as in misalignment) or may induce plastic flow of the contacting surfaces.

Lubricants are often limited by their ability to:

a. Replenish themselves
b. Dissipate frictional heat
c. Resist high environmental temperatures
d. Remain stable under operating conditions

One important purpose of a lubricant is to prevent corrosion of the bearing surfaces engaged in rolling (Hertzian) contact. Many applications involve environments which allow water to accumulate in the bearing cavity. Whether from direct intake or condensation, moisture is detrimental and a lubricant must be selected to disperse the water or to prevent its attack on the metal since corrosion drastically reduces bearing life. Applications involving heavy loads and high operating temperatures also require careful approaches. Here extreme pressure (EP) lubricants should be used. High shaft speeds generally dictate lubricant selection based on the need for cooling, the suppression of churning or aeration of conventional lubricant and, most important of all, the inherent speed limitations of certain bearing types.

Elastohydrodynamic (EHL) lubrication is the model that explains the lubrication of anti-friction bearings. EHL takes into account the deformation of the rolling elements and raceways as well as the increased viscosity of the lubricant in the load zone.

Lubrication Continued

In a rotating rolling element bearing there is one of three types of lubrication conditions present; 1) boundary, 2) thin film, 3) thick film. Bearing operating speed is an important element in determining the lubrication condition. Boundary lubrication occurs when there is metal on metal contact between rolling elements and races. This may be due to low speed and/or oil viscosity that is too low to separate the surfaces. Boundary lubrication is the most severe condition for antifriction bearings and distress of the rolling elements and races will occur. In the thin film condition, partial separation of the surfaces of the rolling elements and races occur with some asperities in contact. This condition may be due to low speed and/or oil viscosity too low to separate the surfaces completely. Some distress of the bearing surfaces will take place in thin film lubrication. Thick film lubrication is the preferred condition for optimum bearing performance. The speed of the bearing and/or the lubricant viscosity is sufficient to separate the rolling elements and raceways. Higher viscosity oils (or higher operating speeds) can help to attain the thick film lubrication condition, but excessively high oil viscosities may lead to higher operating temperatures from churning of the oil or skidding of the rolling elements. Lower viscosity oils sufficient to attain a thick film lubrication condition at the operating speed are selected in high speed applications as they have less tendency to churn or cause skidding.

Grease Lubrication

Greases are applied where fluid lubricants cannot be used because of the difficulty of retention, relubrication, or because of the danger of churning. Rolling contact bearings are often grease lubricated because grease is easier to retain in the housing over a longer period than oil and grease acts, to some extent, as a seal against the entry of dirt and other contaminates into the bearing. Greases are usually made by using soap or other inorganic compounds to thicken petroleum or synthetic oils. The thickener is used to immobilize the oil, acting as a reservoir to release the oil at a slow rate. Though the thickener may have lubrication properties itself, the oil bleeding from the bulk of the grease is felt to be the determining factor. When the oil has depleted to approximately 50% of the total weight of the grease, the lubricating ability of the grease becomes doubtful.

Greases are divided into grades by the NLGI (National Lubricating Grease Institute), ranging from 0, the softest, up through 6, the stiffest. The grade is determined by testing a penetrometer, measuring the depth of penetration of a specific weighted cone. Most greases have thixotropic properties (they soften with working) and, as such, must be considered for their worked properties rather than in the “as-received” condition. Conversely, many greases are found to stiffen when exposed to high shear rates in automatic grease dispensing equipment.

To limit shock loads and settling, grease-lubricated bearing housings should have dividers or seals to keep the bulk of the grease in place. Grease lubrication depends on a relatively small amount of mobile lubricant (the oil bled out of the bulk) to replenish that thrown out of the bearing during operation. If the space between the bulk of the grease and the bearing is too large, then a long delay (determined by the grease bleed rate and its temperature) will be encountered before lubricant in the bearing is resupplied. This delay may affect bearing life.

Grease is normally applied with the material in the cavity contacting the bearing in the lower quadrant for bearings mounted on horizontal shafts. The initial action of the bearing when rotated is to purge itself of excess grease and to clear a path for bleed oil to enter the bearing. Therefore, greases selected are often of an NLGI grade 2 or 3 consistency, referred to as the “channeling” variety.

Lubrication Continued

Grease usually consists of three primary components: oil, thickener, and additives.

Oil is the primary lubricating component in grease and consists of two types: petroleum and synthetic. Petroleum oils are the primary oils used today. Synthetic hydrocarbons can be thought of as synthetic petroleum oils. Other synthetics include esters, silicones, fluorinated hydrocarbons, etc.

Oil is a fluid and can be obtained in varying viscosities. Viscosity refers to the "thickness" of the oil and is usually directly related to an oils' shear strength or its ability to resist loading. Selection of oil viscosity for rolling element bearing applications is normally dependent on bearing size, speed, load and operating temperature. Method of lubrication may also affect the selected oil viscosity. With these factors known, selection of proper oil viscosity can be made on the basis of elastohydrodynamic analysis, which can be provided by Application Engineering.

The thickeners primary purposes are to retain the oil so that it remains in the bearing, release the oil as needed, and reabsorb the oil as needed. The thickener can also provide additional sealing and protection from contamination and heat dissipation. There are many types of grease thickeners including lithium, calcium, sodium, aluminum, polyurea, etc.

Lithium Soap Grease

For grease lubrication, lithium soap base greases are most common. They are preferred for needle bearings in general because of their ability to stand up under churning action of rollers in a confined space. These greases are not channeling types, therefore provide constant lubrication for roller contact surfaces. They are also insoluble in water. Typical operating temperature range is approximately -30°F to +250°F (-35°C to +120°C).

Sodium Soap Grease

Sodium soap greases are suitable for many applications since they do have a relatively broad useful operating temperature range. However, they are generally restricted to the lower operating speeds because they are typically fibrous and more adhesive than other grease types. Because of this, they resist throw-off, but the fibrous texture causes higher operating temperatures than lithium or calcium soap greases. Very small amounts of water can be absorbed by sodium soap greases, which may be an advantage in some applications; however, this type grease will be washed away if excessive water is present. Typical operating temperature range is approximately -5°F to +200°F (-20°C to +93°C).

Calcium Soap Grease

Calcium soap greases are typically used because they are water resistant. They are smooth textured and have good mechanical stability, but are limited to lower operating temperatures than lithium or sodium soap greases. Typical operating temperature range is approximately -5°F to +150°F (-20°C to +65°C).

Lubrication Continued

Polyurea Thickened Grease

Polyurea thickened greases are smooth textured with good mechanical stability. They exhibit very good oxidation and water resistance properties. Oxidation resistance makes this grease type suitable for higher operating temperatures. Typical operating temperature range is approximately -30°F to +350°F (-35°C to +175°C).

Bentonite or Clay Thickened Grease

These smooth textured greases have very good heat resistance, as the thickener will not melt. They are limited by the base oil temperature properties. Operating temperatures up to +350°F (+175°C) are typical, with intermittent operation up to +450°F (+230°C) sometimes possible. Low temperature properties are satisfactory. However, this type is often formulated with a high oil viscosity for high temperature. Such formulations may not be suitable for low temperature applications.

Greases also can also contain additives. These additives may increase load capacity, resist corrosion, resist temperature extremes, resist oxidation, affect oil viscosity, thickener consistency characteristics, as well as many other characteristics.

Consult Application Engineering when using EP additives or other solid additives such as molybdenum disulfide, graphite, brass, nickel, etc.

Food Grade Grease

"Food Grade" grease may be desirable in applications that are within close proximity to food production. "Food Grade" grease is an option in most Regal Power Transmission Solutions bearing products. Please consult Application Engineering for current specifications.

Reduced Maintenance

Some bearings offered by Regal Power Transmission Solutions have features which can help extend bearing operating life and therefore are not provided with provisions for relubrication. This type of bearing may have an operating life limited by the life of the original grease fill and the ability of the seals to protect the bearing from contamination. Regal Power Transmission Solutions has many seal and grease options for reduced maintenance bearings. Further information for these offerings can be found in the respective bearing type Engineering sections.

High Temperature Grease

High temperature grease options are available for most Regal Power Transmission Solutions bearings. Consult Application Engineering for a suggested lubricant for your application. Higher operating temperatures can also affect required lubrication interval. Refer to the lubrication interval information in the respective bearing type Engineering section.

Lubrication Continued

Grease Compatibility

Combinations of greases with different thickeners can result in a mixture having poorer performance or physical properties than the individual components. Incompatibility can also result from other than different thickeners. Because grease is a combination of thickener, oil and additives, it is also possible that any of these components may be incompatible with those of the other grease. Therefore caution should be used when relubricating with or combining different greases. Contact Application Engineering for current grease specifications. Contact your grease manufacturer for grease compatibility.

Petroleum oils and synthetic hydrocarbons are, generally speaking, compatible. Other synthetic oils are, more often than not, incompatible with other oils.

Additives may cause compatibility problems in some cases. Caution should be used when relubricating with or combining different greases. Contact Application Engineering for current grease specifications and your grease manufacturer to verify grease compatibility.

Oil Lubrication

Oil lubrication is normally used when speeds and temperatures are high or when it is desired to have a central oil supply for the machine as a whole. Cooled oil is sometimes circulated through the bearing to carry off excess heat resulting from high speeds heavy loads. Oil for anti-friction bearing lubrication should be well refined with high film strength, good resistance to oxidation and good corrosion protection. Anti-oxidation additives are generally acceptable but are of significance only at higher operating temperatures (over 185 °F). Anti-corrosion additives are always desirable.

Since oils are considerably more uniform in their characteristics than greases, their selection is much easier. The primary requirement, following viscosity, is a high grade mineral oil — not animal or vegetable oils which have a tendency to deteriorate. The oil must be resistant to oxidation, gumming and evaporation so that viscosity assumes the important role. For extremely low starting temperatures, an oil must be selected which has a sufficiently low pour point so the bearing will not be locked by stiff oil. The oil level should normally be maintained at the center of the lower-most rolling element when the bearing is stationary. An over supply of lubricant causes excessive churning action and can lead to heat generation. Oils of varying viscosity may be selected, depending on application conditions. Selection of oil viscosity for rolling element bearing applications is normally dependent on bearing size, speed, load and operating temperature. Method of lubrication may also affect the selected oil viscosity. With these factors known, selection of proper oil viscosity can be made on the basis of elastohydrodynamic analysis, which can be provided by Application Engineering. A general rule is to maintain the following lubricating oil viscosities for the respective bearing types at the bearing operating temperature.

Product	Viscosity at Operating Temperature
Ball	70 SUS (13 cSt)
Needle and Spherical Roller	100-150 SUS (30 cSt)
Cylindrical Roller	110 SUS (23 cSt)
Cylindrical Thrust	125 SUS (26 cSt)
Tapered and Tandem Thrust	160 SUS (34 cSt)

Lubrication Continued

Oil Lubrication Systems

This method of lubrication is generally applicable to unmounted bearing products. The lubrication system must provide each roller bearing with a uniform, continuous supply of clean oil and must satisfy the cooling requirement of the bearing. Oil lubrication systems are also designed to meet the following needs:

a. Adaptability to function over the range of variables encountered in the operating regime
b. Reliability in a given operating environment and over the length of the normal maintenance periods
c. Maintainability
d. Overall ability to meet the requirements of the system application
e. Relative cost when compared to the cost of machine or application

The table below provides a list of commonly used lubrication systems and shows some of the significant features that must be considered in their design and selection for roller bearing applications.

Lubrication System	Initial Cost	Required Maintenance	Oil Flow	Cooling	Reliability	Sensitivity to Environmental Changes	Sealing Requirements
Manual	Low	High	Variable and dependent on worker for continuity	Minimal and variable	Poor	Highly adaptable	Not Significant
Drip Feed	Low	Contingent upon type of service and location of lubrication points	May vary with time	Low	Average	May be affected by temperature variations	Not Significant
Splash	Dependent on Design	Negligible	Dependent upon maintenance of oil level in housing	Fair	High	Sensitive to low temperature. may accumulate moisture due to condensation	Generally critical
Wick Feed	Low to Medium	Medium	Uniform, filtered, continuous	Negligible	High, if wick is maintained	Sensitive to low temperature	Not Significant
Pressure Circulating System	High	Medium	Controlled and continuous. Adding filtration ensures clean oil supply	Excellent, can include heat exchanger	High	May accumulate moisture due to condensation	Important
Air-Oil Mist	High	Medium	Positive, automatic delivery of regulated oil quantity, free of contamination	Excellent	High	Sensitive to low temperature	Important

Lubrication Continued

Lubrication Frequency

Lubrication frequency is dependent on application speed, temperature, and level of contamination. Relubrication schedules are only general recommendations. Experience and testing may be required for specific applications. Check individual product sections for more information on specific Regal Power Transmission Solutions product lubrication guidelines.

Solid Lubricants

Oil saturated polymers (OSP) are generally a porous plastic that retains oil and are used in place of grease. This option may be used in inaccessible areas where relubrication is difficult. Oil is released during bearing operation and excess oil is reabsorbed when operation stops. Since the polymer material fills the bearing cavity, it also helps to keep out contaminant. This product is generally limited to slower operating speeds and generally to temperatures below +200°F (+93°C).

Graphite is another form of solid lubrication. A semi-solid graphite mixture is inserted into the bearing and then baked to cure the material. Lubrication comes in the form of a thin layer of solid graphite that is deposited on all friction surfaces. This type of lubrication works well in extreme temperature (high or low), high contamination, or even when the bearing is submerged (lubricant does not have anti-corrosion properties).

Dry Film

Dry film lubricants such as molybdenum disulfide or graphite are well suited for specialized applications such as: high temperature, oscillatory rotation, maintenance free operation, or locations where bearings cannot be reached for easy maintenance. The lubricant is applied as a thin film and is permanently bonded to the bearing surfaces. The interaction of the rolling elements with this solid lubricant works to compact the lubricant into the surface imperfections of the bearing elements and reduces metal-to-metal contact.

Mounting

Mounting the bearing has important effects on performance, durability and reliability. Proper tools, fixtures and techniques are a must for any bearing application, and it is the responsibility of the design engineer to provide for this in his design, advisory notes, mounting instructions and service manuals. Nicks, dents, scores, scratches, corrosion staining and dirt must be avoided if reliability, long life and smooth running are to be expected. This section is provided as a reference only, additional data dealing solely with each type of bearing is found in each respective section.

Fit selections given in the various sections will serve as a guide for the majority of applications where the bearings are subjected to normal or heavy loads and other normal operating conditions. When bearings are subjected to very heavy or vibratory loads it may be necessary to employ shaft and housing fits tighter than standard. The same applies if shafts or housings of soft metal or those not having smoothly ground bearing seats (i.e., the smoothness ordinarily associated with ground or reamed bores) are used. Furthermore, if speeds are abnormally high, it may be necessary to maintain shaft and housing fits other than those shown in tables. Consult Application Engineering for recommendations for these abnormal conditions.

Shaft Fit – Mounted Product

Most mounted bearings are used to provide rotational support by inserting a shaft through them, typically with a slip fit. The shafts tolerance and finish is of utmost importance for proper bearing function and useful life. Ground shaft finishes are normally suggested for most applications; however, in some cases, a ground finish is not practical. In these situations, a machined finish may be acceptable; consult Application Engineering for recommendations. Additional shaft requirements dealing solely with each type of bearing are found in each respective section.

High Load Applications – Mounted Product

Applications where the loading approaches the load listed in the respective mounted product's rating table at 5000 hours life and 150/250 rpm should be reviewed and given special consideration. Modifications to consider include:

- Shaft size should be closely controlled for a line to line to a light press fit.
- Skwezloc® Locking Collar or double lock is the preferred lock system.
- Lubricants with "EP" extreme pressure additives may be required.
- Care in housing selection, load direction, and mounting techniques should be exercised. Refer to respective mounted product's installation instructions.

High Speed Applications – Mounted Product

Applications where the speed is in the range of 80% to 100% of the maximum speed listed in the respective mounted product's rating table should be reviewed and given special consideration. Modifications to consider include:

- Shaft size should be controlled to specifications listed in the installation section.
- Skwezloc Locking Collar or double lock is the preferred lock system.
- High quality lubricants should be used.
- Grease should be added more frequently and in small amounts. Refer to respective mounted product's relubrication schedule.
- Care in mounting techniques should be exercised. Refer to respective mounted product's installation instructions.

Mounting Continued

Shaft Fit – Unmounted Product

The slipping or creeping of a bearing race on a rotating shaft, or in a rotating housing, occurs when the fit is loose. Such slipping or creeping action can result in rapid wear of both the shaft and bearing races when the surfaces are dry and heavily loaded. To help prevent this, the bearing is customarily mounted with a press fit on the rotating race and a push fit on the stationary race with the tightness or looseness dependent upon the service intended. Bearings should be mounted squarely when press fitted, either in housings or on shafts, and installation pressure should be applied to the press fitted member only, or should be evenly distributed over both members. Where shock or vibratory loads are to be encountered, fits should be made tighter than for ordinary service. When heavier shaft fits are encountered, the assembly of a bearing on a shaft is best done by expanding the inner race by heating. Heat should not be applied directly to the bearing, but should be conducted to the bearing by some fluid medium. It is recommended that such heating be accomplished in clean mineral oil or in a temperature-controlled furnace at a temperature of between 200°F and 250°F as overheating will reduce the hardness of the races. Sealed bearings should not be mounted by this method as the grease with which the bearings are prelubricated may be affected.

Housing Fit – Mounted Product

For mounted bearing product (pillow blocks, flange blocks...) proper housing fit is dependent on bearing application variables: amount of shock/vibration, high speed fan applications, and need for low torque self-aligning capabilities. Applications with high shock and vibration require tighter fits between the bearing insert and the housing. Shock and vibration work to loosen the fit over time so it is best to start with tight fits. Fan applications require a loose fit to allow for easy self-aligning capabilities to adjust for variations in mounting surfaces that are typically found in air handling mounting structures.

Housing Fit – Unmounted Product

These types of bearings will be mounted into the customer's housing and therefore is application dependent. In the case of unmounted roller bearings or ER style bearings, housing fit is dependent on whether the outer ring is stationary or rotating. In general, a rotating outer ring requires a tighter fit than if the outer ring is stationary. In applications where bearing housings are made of soft materials (aluminum, magnesium, light sheet metal, etc.) or those which lose their fit because of different thermal expansion, outer race mounting must be approached cautiously. First, determine the possible consequences of race loosening and turning. The type of loading must also be considered to determine its effect on race loosening. The force exerted by the rotating elements on the outer race can initiate a precession which will aggravate the race loosening problem through wear, pounding, and abrasion. Since the pressing force is usually greater than the friction forces in effect between the outer race and housing, no foolproof method can be recommended for securing outer races in housings which deform significantly under load or after appreciable service wear. The surest solution is to press the race into a housing of sufficient stiffness with the heaviest fit consistent with the bearing operating clearances. Often, inserts or liners of cast iron or steel are used to maintain the desired fit and increase useful life of both bearing and housing. When stationary outer rings are required to float (move axially in the housing bore to compensate for expansion), a housing bore surface finish of 65 micro inches Ra maximum is recommended.

Mounting Continued

Housing Fit – Cam Follower

Proper mounting of stud type cam follower and track roller bearings requires a close fit between the bearing stud and the housing hole. The endplate must be backed up by the housing member face. Likewise the face of the housing adjacent to the bearing endplate face should be square to the housing bore.

Endplate support is also critical when mounting yoke-type series cam followers and track rollers. If the endplates are not properly backed up, they can partially or completely work off the inner ring. The preferred mounting method is by use of a separate bushing at one side to permit complete axial clamping of the endplates. If the endplates can not be clamped end-wise, it is essential to have a close fit axially in the yoke in which the bearing is mounted to prevent the bearing endplates displacing axially. Refer to the Camrol engineering section for more detailed information regarding cam follower mounting.

Mounting for Precision and Quiet Running Applications - Radial Cylindrical Roller Bearings

In applications of roller bearings where smoothness of operation is important, special precautions must be taken to eliminate those conditions which serve to initiate radial and axial motions. Accompanying these motions are forces that can excite bearing system excursions in resonance with shaft or housing components over a range of frequencies from well below shaft speed to as much as 100 times above it. The more sensitive the configuration, the greater the need for precision in the bearing and mounting. Among the important elements to be controlled are shaft, race, and housing roundness, squareness of faces, diameters, and shoulders. Though not readily appreciated, grinding chatter, lobular out-of-roundness, waviness and any localized deviation from an average or mean diameter (even as a consequence of flat spots as small as .0005 in.) can cause significant operating roughness. To detect the aforementioned deficiencies and ensure the selection of good components, three-point electronic indicator inspection must be made. For ultra precise or quiet applications, components are often checked on a continuous recording instrument capable of measuring to within a few millionths of an inch. Though this may seem extreme, it has been found that shaft deformities will be reflected through the bearings' inner races. Similarly, tight-fit outer races pick up significant deviations in housings. Special attention is required both in housing design and in assembly of the bearing to shaft and housing. Housing response to axial excursions forced by bearing wobble resulting from out-of-square mounting has been found to be a major source of noise and howl in rotating equipment. Stiffer housings and careful alignment of bearing races make significant improvements in applications where noise or vibrations have been found to be objectionable.

Squareness and Alignment - Radial Cylindrical Roller Bearings

In addition to the limits for roundness, squareness of end faces and shoulders must be closely controlled. Tolerances of .0001 in. full indicator reading per inch of diameter are normally required for shoulders, in addition to appropriately selected limits for fillet eccentricities. The latter must also fall within specified limits for radii tolerances to prevent interference with bearing race fillets, which results in cocking of the race. Reference should be made to the individual bearing dimension tables, which list the corner radius for each bearing. Shoulders must also be of sufficient height to ensure proper support for the races.

Mounting Continued

Rollway Cylindrical Roller and McGill Spherical Roller Bearings – Shaft and Housing Seat Diameters

The tolerances, specified in the following charts for shaft and housing bearing seat fits, may be followed for specific application conditions that are encountered, as indicated. For special applications not covered by the following, Application Engineering should be consulted for additional assistance. The proper shaft and housing seat tolerances are designated by a letter and number. For shafts, a lower case letter is used, and for housings, a capital letter, both indicating the location of the tolerance range in relation to the nominal bearing dimension. The numbers indicate the grade of accuracy.

Housing Seat Fits

<table>
<tr><th>Housing Construction</th><th colspan="3">Operating Conditions</th><th>Fit Symbol*</th></tr>
<tr><td rowspan="7">Housing not split radially</td><td rowspan="3">Housing rotating relative to load direction</td><td colspan="2">Heavy loads on bearing in thin wall housing</td><td>P7</td></tr>
<tr><td colspan="2">Normal and heavy loads</td><td>N7</td></tr>
<tr><td colspan="2">Light loads</td><td rowspan="2">M7</td></tr>
<tr><td rowspan="4">The direction of the load indeterminate</td><td colspan="2">Heavy shock loads</td></tr>
<tr><td colspan="2">Heavy and normal loads axial displacement of outer ring not required</td><td>K7</td></tr>
<tr><td rowspan="5">Housing split or not split radially</td><td colspan="2">Normal and light loads axial displacement of outer ring desirable</td><td rowspan="2">J7</td></tr>
<tr><td rowspan="4">Housing stationary relative to load direction</td><td colspan="2">Shock loads, temporary complete unloading</td></tr>
<tr><td rowspan="2">All loads</td><td>Housing not split radially</td><td>H7</td></tr>
<tr><td>Housing split radially</td><td>H8</td></tr>
<tr><td colspan="2">Heat supplied through the shaft</td><td>G7</td></tr>
</table>

* For cast iron or steel housing.
For housings of light metal, tolerances are generally selected that give slightly tighter fits than those shown.

Mounting Continued

Shaft Seat Fits

Operating Condition		Spherical Roller Bearings			Cylindrical Roller Bearings		
		Nominal Shaft Dia.		Fit Symbol	Nominal Shaft Dia.		Fit Symbol
		MM	Inch		MM	Inch	
Stationary inner ring relative to load direction, all loads	Inner ring easily displaced	All diameters	All diameters	g6	All diameters	All diameters	g6
	Inner ring not easily displaced	All diameters	All diameters	h6	All diameters	All diameters	h6
Inner ring rotating relative to load direction, or load direction indeterminate	Radial load ≤ .08 BDR*	≤ 40 Over 40 to 100 Over 100 to 200	≤ 1.57 Over 1.57 to 3.94 Over 3.94 to 7.88	j6 k6 m6	≤ 40 Over 40 to 140 Over 140 to 320	≤ 1.57 Over 1.57 to 5.51 Over 5.51 to 12.6	j6 k6 m6
	Radial load > .08 BDR* ≤ .18 BDR*	≤ 40 Over 40 to 65 Over 65 to 100 Over 100 to 140 Over 140 to 280	≤ 1.57 Over 1.57 to 2.56 Over 2.56 to 3.94 Over 3.94 to 5.52 Over 5.52 to 11.10	k5 m5 m6 n6 p6	≤ 40 Over 40 to 100 Over 100 to 140 Over 140 to 320 Over 320 to 500	≤ 1.57 Over 1.57 to 3.94 Over 3.94 to 5.51 Over 5.51 to 12.6 Over 12.6 to 19.7	k5 m5 m6 n6 p6
	Radial load > .18 BDR	≤ 40 Over 40 to 65 Over 65 to 100 Over 100 to 140 Over 140 to 200 Over 200 to 500	≤ 1.57 Over 1.57 to 2.56 Over 2.56 to 3.94 Over 3.94 to 5.52 Over 5.52 to 7.88 Over 7.88 to 19.69	m5 m6 n6 p6 r6 r7	≤ 40 Over 40 to 65 Over 65 to 140 Over 140 to 200 Over 200 to 500 Over 500	≤ 1.57 Over 1.57 to 2.56 Over 2.56 to 5.51 Over 5.51 to 7.87 Over 7.87 to 19.7 Over 19.7	m5 m6 n6 p6 r6 r7

* BDR - Bearing Basic Dynamic Rating

Mounting Continued

Standard Shaft Fits

Dimensions in 0.0001 inches

Bore mm		g6	h6	j5	j6	k5	k6	m5	m6	n6	p6	r6
3	6	-2	0	+1	+2	+2	-	+4	-	-	-	-
		-5	-3	-1	-1	0	-	+2	-	-	-	-
7	10	-2	0	+2	+3	+3	-	+5	-	-	-	-
		-6	-4	-1	-1	0	-	+2	-	-	-	-
11	18	-2	0	+2	+3	+4	-	+6	-	-	-	-
		-7	-4	-1	-1	0	-	+3	-	-	-	-
19	30	-3	0	+2	+4	+4	-	+7	-	-	-	-
		-8	-5	-2	-2	+1	-	+3	-	-	-	-
31	50	-4	0	+2	+4	+5	+7	+8	+10	-	-	-
		-10	-6	-2	-2	+1	+1	+4	+4	-	-	-
51	80	-4	0	+2	+5	+6	+8	+9	+12	+15	-	-
		-11	-7	-3	-3	+1	+1	+4	+4	+8	-	-
81	120	-5	0	+2	+5	+7	+10	+11	+14	+18	+23	-
		-13	-9	-4	-4	+1	+1	+5	+5	+9	+15	-
121	180	-6	0	+3	+6	+8	+11	+13	+16	+20	+27	+35
		-15	-10	-4	-4	+1	+1	+6	+6	+11	+17	+26
181	200	-6	0	+3	+6	+9	-	+15	+18	+24	+31	+42
		-17	-11	-5	-5	+2	-	+7	+7	+12	+20	+30
201	225	-6	0	+3	+6	+9	-	+15	+18	+24	+31	+43
		-17	-11	-5	-5	+2	-	+7	+7	+12	+20	+31
226	250	-6	0	+3	+6	+9	-	+15	+18	+24	+31	+44
		-17	-11	-5	-5	+2	-	+7	+7	+12	+20	+33
251	280	-7	0	+3	+6	+11	-	+17	+20	+26	+35	+50
		-19	-13	-6	-6	+2	-	+8	+8	+13	+22	+37
281	315	-7	0	+3	+6	+11	-	+17	+20	+26	+35	+51
		-19	-13	-6	-6	+2	-	+8	+8	+13	+22	+39
316	355	-7	0	+3	+7	+11	-	+18	+22	+29	+39	+57
		-21	-14	-7	-7	+2	-	+8	+8	+15	+24	+43
356	400	-7	0	+3	+7	+11	-	+18	-	+29	+39	+59
		-21	-14	-8	-7	+2	-	+8	-	+15	+24	+45
401	450	-8	0	+3	+8	+13	-	+20	-	+31	+43	+65
		-24	-16	-8	-8	+2	-	+9	-	+16	+27	+50
451	500	-8	0	+3	+8	+13	-	+20	-	+31	+43	+68
		-24	-16	-8	-8	+2	-	+9	-	+16	+27	+52
501	560	-9	0	+3	+9	+12	-	+22	-	-	+48	+76
		-26	-17	-9	-9	0	-	+10	-	-	+31	+59
561	630	-9	0	+3	+9	+12	-	+22	-	-	+48	+78
		-26	-17	-9	-9	0	-	+10	-	-	+31	+61
631	710	-9	0	+4	+10	+14	-	+26	-	-	+54	+89
		-29	-20	-10	-10	0	-	+12	-	-	+35	+69

Mounting Continued

Standard Shaft Fits

Dimensions in 0.0001 inches

Bore mm		g6	h6	j5	j6	k5	k6	m5	m6	n6	p6	r6
3	6	-2	0	+1	+2	+2	-	+4	-	-	-	-
		-5	-3	-1	-1	0	-	+2	-	-	-	-
7	10	-2	0	+2	+3	+3	-	+5	-	-	-	-
		-6	-4	-1	-1	0	-	+2	-	-	-	-
11	18	-2	0	+2	+3	+4	-	+6	-	-	-	-
		-7	-4	-1	-1	0	-	+3	-	-	-	-
19	30	-3	0	+2	+4	+4	-	+7	-	-	-	-
		-8	-5	-2	-2	+1	-	+3	-	-	-	-
31	50	-4	0	+2	+4	+5	+7	+8	+10	-	-	-
		-10	-6	-2	-2	+1	+1	+4	+4	-	-	-
51	80	-4	0	+2	+5	+6	+8	+9	+12	+15	-	-
		-11	-7	-3	-3	+1	+1	+4	+4	+8	-	-
81	120	-5	0	+2	+5	+7	+10	+11	+14	+18	+23	-
		-13	-9	-4	-4	+1	+1	+5	+5	+9	+15	-
121	180	-6	0	+3	+6	+8	+11	+13	+16	+20	+27	+35
		-15	-10	-4	-4	+1	+1	+6	+6	+11	+17	+26
181	200	-6	0	+3	+6	+9	-	+15	+18	+24	+31	+42
		-17	-11	-5	-5	+2	-	+7	+7	+12	+20	+30
201	225	-6	0	+3	+6	+9	-	+15	+18	+24	+31	+43
		-17	-11	-5	-5	+2	-	+7	+7	+12	+20	+31
226	250	-6	0	+3	+6	+9	-	+15	+18	+24	+31	+44
		-17	-11	-5	-5	+2	-	+7	+7	+12	+20	+33
251	280	-7	0	+3	+6	+11	-	+17	+20	+26	+35	+50
		-19	-13	-6	-6	+2	-	+8	+8	+13	+22	+37
281	315	-7	0	+3	+6	+11	-	+17	+20	+26	+35	+51
		-19	-13	-6	-6	+2	-	+8	+8	+13	+22	+39
316	355	-7	0	+3	+7	+11	-	+18	+22	+29	+39	+57
		-21	-14	-7	-7	+2	-	+8	+8	+15	+24	+43
356	400	-7	0	+3	+7	+11	-	+18	-	+29	+39	+59
		-21	-14	-8	-7	+2	-	+8	-	+15	+24	+45
401	450	-8	0	+3	+8	+13	-	+20	-	+31	+43	+65
		-24	-16	-8	-8	+2	-	+9	-	+16	+27	+50
451	500	-8	0	+3	+8	+13	-	+20	-	+31	+43	+68
		-24	-16	-8	-8	+2	-	+9	-	+16	+27	+52
501	560	-9	0	+3	+9	+12	-	+22	-	-	+48	+76
		-26	-17	-9	-9	0	-	+10	-	-	+31	+59
561	630	-9	0	+3	+9	+12	-	+22	-	-	+48	+78
		-26	-17	-9	-9	0	-	+10	-	-	+31	+61
631	710	-9	0	+4	+10	+14	-	+26	-	-	+54	+89
		-29	-20	-10	-10	0	-	+12	-	-	+35	+69

Mounting Continued

Standard Housing Fits

Dimensions in 0.0001 inches

OD mm		G7	H8	H7	H6	J6	J7	K6	K7	M6	M7	N6	N7	P6	P7
10	18	+2	0	0	0	-2	-3	-4	-5	-6	-7	-8	-9	-10	-11
		+9	+11	+7	+4	+2	+4	+1	+2	-2	0	4	-2	-6	-4
19	30	+3	0	0	0	-2	-4	-4	-6	-7	-8	-9	-11	-12	-14
		+11	+13	+8	+5	+3	+5	+1	+2	-2	0	-4	-3	-7	-6
31	50	+4	0	0	0	-2	-4	-5	-7	-8	-10	-11	-13	-15	-17
		+13	+15	+10	+6	+4	+6	+1	+3	-2	0	-5	-3	-8	-7
51	80	+4	0	0	0	-2	-5	-6	-8	-9	-12	-13	-15	-18	-20
		+16	+18	+12	+7	+5	+7	+2	+4	-2	0	-6	-4	-10	-8
81	120	+5	0	0	0	-2	-5	-7	-10	-11	-14	-15	-18	-20	-23
		+19	+21	+14	+9	+6	+9	+2	+4	-2	0	-6	-4	-12	-9
121	150	+6	0	0	0	-3	-6	-8	-11	-13	-16	-18	-20	-24	-27
		+21	+25	+16	+10	+7	+10	+2	+5	-3	0	-8	-5	-14	-11
151	180	+6	0	0	0	-3	-6	-8	-11	-13	-16	-18	-20	-24	-27
		+21	+25	+16	+10	+7	+10	+2	+5	-3	0	-8	-5	-14	-11
181	250	+6	0	0	0	-3	-6	-9	-13	-15	-18	-20	-24	-28	-31
		+24	+28	+18	+11	+9	+12	+2	+5	-3	0	-9	-6	-16	-13
251	315	+7	0	0	0	-3	-6	-11	-14	-16	-20	-22	-26	-31	-35
		+27	+32	+20	+13	+10	+14	+2	+6	-4	0	-10	-6	-19	-14
316	400	+7	0	0	0	-3	-7	-11	-16	-18	-22	-24	-29	-34	-39
		+30	+35	+22	+14	+11	+15	+3	+7	-4	0	-10	-6	-20	-16
401	500	+8	0	0	0	-3	-8	-13	-18	-20	-25	-26	-31	-37	-43
		+33	+38	+25	+16	+13	+17	+3	+7	-4	0	-11	-7	-22	-18
501	630	+9	0	0	0	-3	-9	-17	-28	-28	-38	-35	-45	-48	-58
		+36	+43	+28	+17	+15	+19	0	0	-10	-10	-17	-17	-31	-31
631	800	+9	0	0	0	-4	-9	-20	-31	-31	-43	-39	-51	-54	-66
		+41	+49	+31	+20	+16	+22	0	0	-12	-12	-20	-20	-35	-35
801	1000	+10	0	0	0	-4	-10	-22	-35	-35	-49	-44	-57	-61	-75
		+46	+55	+35	+22	+18	+25	0	0	-13	-13	-22	-22	-39	-39

Internal Clearance

Radial and Axial Internal Clearance

Anti-friction bearings are manufactured with specific radial clearances between the raceways and rolling elements. The clearances are designed for normal operating temperatures and application conditions. Certain bearing products, such as spherical roller bearings, are available with industry standard radial clearance ranges. Other bearing products will incorporate radial clearance as determined by the manufacturer. For high temperature and high speed applications, increased radial clearance options may be available to allow for thermal expansion. For mounted bearings exposed to high shock load and vibration, reduced internal clearance may be an option to distribute load over more rolling elements and reduce the stress per rolling element. Oscillatory applications may also benefit from reduced internal clearance. Load is carried over more rolling elements thus putting less stress on bearing raceways and potentially reducing wear.

Axial clearance between rolling elements and raceways also allows an inherent axial movement within the bearing, this is known as end play. End play, is the maximum relative displacement of the bearing rings relative to one another, in a direction parallel to the axis of rotation. The amount of endplay in a given bearing product is based on the design experience of the manufacturer and partly controlled by manufacturing tolerances.

Bearing Stiffness

Bearing stiffness is the relationship between bearing load and bearing deflection due to that load. Bearing stiffness is dependent on several variables: rolling element type, contact angle, applied load, and bearing preload.

Rolling element type comes into play due to the different contact patterns that the rolling elements make with the raceways. Therefore roller bearings, with their large line contact, will be stiffer than the point type contact produced by ball bearings. Additionally, the greater the number of rolling elements within the bearing the stiffer it will be.

Contact angle affects whether a bearing has better radial or axial stiffness. A small contact angle will produce a bearing with higher radial stiffness while a large contact angle will create higher axial stiffness.

Preload increases stiffness by removing internal clearance which in turn puts more rolling elements in contact with the raceway. As a negative affect, preload can increase operational temperatures and internal friction which can lead to reduced bearing life.

For specific information concerning stiffness data related to Regal Power Transmission Solutions bearings, please contact Application Engineering.

Bearing Materials

A portion of bearing life and reliability of a rolling element bearing is based upon the material that the bearing components are made from. L10 bearing life equations are based upon the fatigue limit of the metal surfaces, both raceways and rolling elements. Therefore the proper and highest quality materials must be used.

Through-hardened Steels

52100 is the most common type of through-hardened steel used for bearing components as it is widely recognized as a superior bearing steel. It is resistant to shock loading and carries high metal fatigue life ratings. In addition, Regal Power Transmission Solutions specifies all steel to be vacuum degassed (VDG). This is an extra manufacturing operation to filter impurities and remove inclusions that often appear during steelmaking. The result is a cleaner and more pure material that is better able to withstand subsurface cracking and subsequent premature metal fatigue failures.

Some bearing product produced using 52100 utilizes a zone hardening process in which only the raceway and immediate area is hardened. This creates a hardened surface for rolling elements but ductile in other areas for improved durability and shock load resistance.

Case-hardened Steels

Case hardening is used for certain applications when a through hardened part is undesirable. The surface can be hardened to an acceptable level yet the core of the part remains soft to resistant vibration and impact loads.

8620, 4118 and 9310 are examples of case hardening steel used by Regal Power Transmission Solutions for bearing components. These low carbon alloy steels have good hardenability characteristics and toughness when properly carburized and hardened.

Corrosion Resistant Steels

A variety of corrosion resistant steels are used across the Regal Power Transmission Solutions bearing line. The type of steel used depends on the component, cost effectiveness, and level of corrosion resistance needed.

The most common steel used for corrosion resistant bearing products is 400 series stainless steel. Its corrosion resistance is less than austenitic grades but it can be heat treated to obtain acceptable hardness value needed for anti-friction bearings.

300 series stainless steel is the most common type of stainless steel used for consumer products. It has excellent corrosion resistance when compared to 440C or coatings. However it cannot be hardened to acceptable levels for use in bearings. Therefore it can only be used in certain areas of bearing design that do not see a direct load from rolling elements. This includes components such as housings, seal stampings, setscrews, grease fittings, etc.

Standard bearing steels can also be coated or plated with various substances to provide good corrosion resistance as well as good harness values.

Bearing Materials

High Temperature Steels

As temperature rises, bearing rating is reduced, depending upon the bearing material and the operating temperature. Various types of tool steel, stainless steel and some of the more exotic materials are being used in order to meet the need for bearings to operate at elevated temperatures.

Bearing applications involving elevated temperatures preclude the use of standard bearing materials if full capacity is to be realized. In general, the temperature range is divided as follows:

- 250°F to 400° F
- 400°F to 800°F
- Over 800°F

Applications in range (a) can be generally handled by standard alloy steels , such as SAE 52100 or carburized SAE 8620 , suitably hardened and stabilized for the range of operating temperature . Little or no reduction in basic capacity should be expected. For range (b), high alloy tool steels (M-50) may be used. For range (c), materials such as ceramics are generally required. Design options in this range are generally limited.

Composites – Bushings

Replacing rollers, a non-metallic bushing provides load support and a sliding motion that eliminates or reduces need for bearing lubrication. Recommended for use where relubrication is not convenient or where the possibility of grease contamination of the product being processed is not acceptable. Application limitations are lighter loads and lower speeds when compared to a rolling element bearing.

McGill bushing type CAMROL® bearings have a maximum allowable continuous operating temperature of 200°F (120°). The bushings are intended to be used in the self-lubricated mode. However, continuous feed oil lubrication can be used to provide reduced wear rates. Grease lubrication should not be used.

Housing Material

A variety of housing materials are offered within the Regal Power Transmission Solutions mounted bearing product line. Selection of proper materials is application dependent and based upon variables such as type of loading, cost, and environmental conditions.

Gray iron, or cast iron, is the most common housing material type and has adequate strength for most applications. However, certain application conditions must be considered. Cast iron can be a brittle material when higher tensile (pulling) forces are applied; therefore it is not recommended in applications where shock loads are present.

Ductile iron or cast steel is preferred in applications with heavy loads, shock, and vibration since these materials have higher tensile strength and ductility. The chart below shows a comparison of housing materials and their tensile strengths. There is a slightly higher cost associated with ductile iron and cast steel housings and availability may be limited depending on product line.

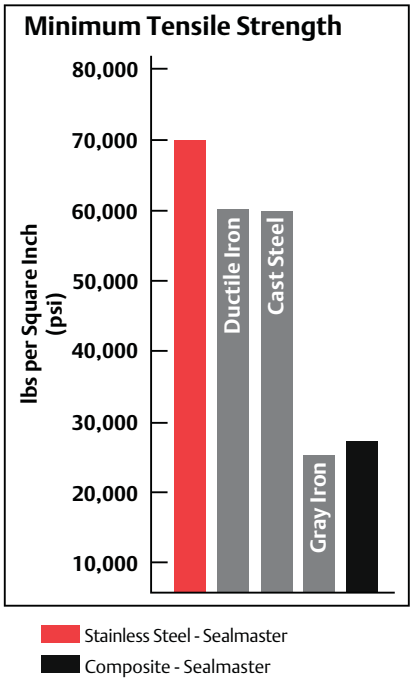

In applications where there is significant humidity, moisture or chemicals present there is a likelihood that corrosion may occur over time. A coating or alternative material maybe required to meet material performance or customer aesthetic requirements. For each product line, Regal Power Transmission Solutions can offer an alternate coating or material to improve corrosion resistance. Refer to each product section or the Corrosion Resistant Engineered Solutions (CRES) section K for more details on available options.

Seal Selection

The purpose of seals on a bearing is to help keep contamination from entering the bearing and to help retain lubricant inside the bearing cavity. Proper seal selection is dependent on a number of application variables: operational speed, level of contamination, type of contamination, operational temperature, and type of lubricant used.

Seal Type

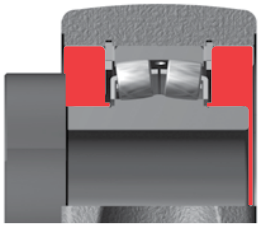

Non-contacting/ Labyrinth Seals

Recommended for use in dry, low contamination environments. Constructed from multiple metal stampings, typically with one element that rotates with the shaft, creating a centrifugal force to help keep out contamination. Excess grease purges from the seal to help remove contaminates caught in the lubricant and prevent seal damage from over lubrication. These types of non-contact seals save energy by reducing drag and normally cannot be blown by over greasing.

Contacting Seals

Contacting seals can be used in a variety of applications depending on type of seal and material used. These factors affect the type and severity of contamination that the seal can withstand.

Felt Seal

The design incorporates a series of passageways with a highly effective filtering media that together block the ingress of contaminants and allow for the purging of oxidized grease during re-lubrication. Protective metal flingers are primary factors in seal performance. The inner flinger is pressed into the outer race and is a stationary foundation for the sealing system. The outer flinger, the first barrier to contaminant entry, is attached to the inner race and therefore rotates with the shaft. The rotation of the outer flinger offers two significant benefits. The first is the creation of a centrifugal force that repels debris by “slinging” it away from the seal area. The second is an extension of the flinger internally into the bearing chamber that initiates a vortex that churns the lubricant back toward the ball path. The design operates with less drag and less heat generation than rubber contact seals.

Recommend for use in dry applications with light to moderate contamination. Standard felt seals can operate in temperatures up to 200°F (93°C). Nomex felt can be used for temperatures 200°F to 400°F (93°C to 204°C).

Rubber Lip

Positive contact molded rubber lip seal with or without an auxiliary flinger. This type of seal functions well in wet and dirty environments up to 250°F (120°C). High temperature versions are available for conditions up to 450°F (232°C). Multiple lip seals are also available for severe applications. Rubber lip seals come in a variety of materials: Buna N Nitrile, FKM, and silicone.

Seal Selection Continued

Spring Loaded

This V-shaped rubber seal is molded into a metal stamping. A spring is retained in the body of the "V" to maintain constant pressure against the inner race over the life of the seal. Seal lip can be oriented inward for increased lubricant retention. For better exclusion of contaminates the lip is oriented outward. High temperature versions available.

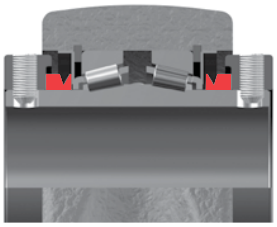

V-Ring

The rubber contact face seal is designed to retain lubricant and help exclude contaminants. The seal is designed with a long flexible face that seals axially against the counterface. The contact seal is self purging. It retains low torque characteristics and rotates with the shaft to help reduce contaminate build-up on the seal. Its low friction reduces heat generation and wear.

Bearing Retainers

The function of a bearing retainer (cage) is to separate the rolling elements at evenly space intervals and reduce internal friction which allows for increased speeds. In roller bearing product the retainer also provides stability to the rolling elements, keeping them from skewing as they rotate. Retainers are sometimes omitted and a full complement of rolling elements is used instead. Additional rolling elements help to add rigidity and increase static capacity.

In some cases use of retainers can also help in aiding longer bearing life. A retained bearing has a larger grease reservoir than a similar bearing that is a full complement.

Mounted Ball

Land Riding

A land riding is design used in Sealmaster mounted ball product. This design minimizes friction and provides maximum grease circulation. Retainer is designed to "float" on the ground extension (or lands) of the outer ring while spacing the balls precisely for more even load distribution. This minimizes wear on both balls and retainer, while maximizing stability, especially important in applications involving vibration, shock loading or high operating speeds. For applications involving high temperatures, +220°F, land riding brass retainers are available.

Ball Riding

Ball riding retainers are designed to retain the balls within the cage pockets, which improves manufacturability, but can wipe oil away from the rolling elements removing it from these critical components. Sealmaster Material Handling Bearings and Browning Mounted Ball Bearing utilize a one piece ball riding nylon retainer molded from nylon 6/6. Nylon retainers a low cost alternative to brass retainers that have many good characteristics: low friction, natural lubricity, and resistant to many chemicals. Nylon retainers are capable of continues use up to 250°F, but many other components in the bearing may prevent. Some manufactures utilize a steel riveted ball riding retainer.

Mounted Roller

Stamped Steel

A one-piece, low carbon steel stamping. This type of retainer provides roller guidance as well as retaining rolling elements with the inner ring.

Bearing Retainers Continued

Unmounted Roller – McGill

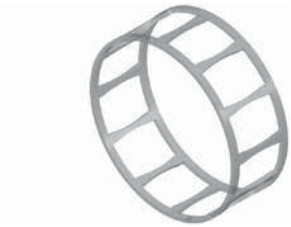

Stamped Steel Retainer – SPHERE-ROL

One-piece, low carbon steel stamping. Land riding design only provides roller spacing and helps provide greater speed capability.

Stamped Steel Retainer – CAGEROL

One-piece, low carbon steel stamping. Retains and spaces the rollers. Provides roller guidance to prevent skewing. Allows for an increased lubricant reservoir. Minimizes radial play of rollers to ease assembly. Helps provide higher speed capability.

Stamped Steel Retainer – Metric CAMROL

One-piece, low carbon steel stamping. Retainers are heat treated to allow for roller guidance. The retainers are designed with two rollers per pocket (except 13, 16, and 19mm OD's) to help maximize static and dynamic load ratings, yet still offer the advantages of a caged construction.

Note: Inch CAMROL is a full complement bearing design that does not utilize a retainer.

Unmounted Roller - Rollway

Stamped Steel Retainer

A one-piece, low carbon steel stamping. Supplied on some bearings with snap ring retention. (TRU-ROL numbering suffix of "B") Recommended for low speed operations.

Bearing Retainers Continued

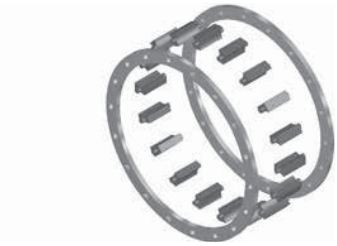

Segmented Steel Retainer

A built-up type of retainer utilizing low carbon steel segments rigidly held between stamped, low carbon steel end plates. This is the standard retainer supplied with commercial bearings identified with the TRU-ROL numbering system. Recommended for moderate speed applications.

Two-Piece Retainer

This type of retainer is fabricated from brass. This is the standard retainer supplied with Rollway bearings identified with the MAX numbering system, ISO numbering system, TRU-ROL numbering system when the "MR" suffix is used, and any bearing with bore size over 180mm. Recommended for moderate to high speed applications.

One-Piece Retainer

This land piloting retainer is fabricated from brass or steel with radial retention of the rollers provided by closing the roller "pocket" with small projections formed by mechanically upsetting the retainer material. This retainer design is typically made to order for high speed applications, though it is applicable for other applications.

Cylindrical Thrust - Machined Brass

Thrust bearing retainers are machined from centrifugally cast brass. The retainers for all cylindrical roller thrust bearings are designed to be roller riding. The contoured roller pockets are accurately machined at right angles to the thrust force, which will be applied to the bearing. The rollers are retained in the assembly by a steel ring pinned to the outside diameter of the retainer.

Tapered Thrust – Machined Brass

Taper thrust bearing retainers are machined from a single piece of centrifugally cast brass. The retainer is designed to pilot on the thrust plates' flanges. The roller pockets are accurately machined at right angles to the thrust force which will be applied to the bearing. The T-Flat retainers are "pin through" style (pins extend through the center of the roller). The retainer consists of two steel rings through which the hardened steel pins are secured. An alternate design is a retainer machined from a single piece of centrifugally cast brass with the rollers retained by two pins.

Bearing Storage

Cleanliness and accuracy are stressed in all phases of bearing manufacture to help provide a clean and precise mechanical instrument. It is therefore essential the same care be taken in subsequent shipping, storage, and handling, as well as in mounting to make sure of the ultimate in bearing performance.

After completion, each bearing is thoroughly cleaned, preserved and packaged in a shipping carton with proper identification.

Lint-free commercial packing such as polystyrene foam packaging materials, crumpled newspaper or batting material may be used to cushion cartons of bearings in shipping containers. Materials having fine particulate, such as saw dust, are not recommended as such material may contaminate the bearings. The wrappings should never be removed from bearings until they are ready to be mounted. For those bearings preserved with a protective neutral compound, it is generally unnecessary to remove this coating as it will normally mix with any type lubricant.

When necessary to keep bearings in storage, they should be placed in a dry, cool location, and provision should be made to utilize the old stock before using new stock. Avoid dropping or other large impacts to the bearing as these forces will create damage to the bearing components and result in less than ideal bearing life.

ABMA and ISO

ABMA

These letters refer to American Bearing Manufacturers' Association - an organization comprised of the leading bearing and bearing-related manufacturers in the United States. The main purpose of the ABMA is to bring about standardization within the industry and to pass these benefits on to the bearing users.

ISO

ISO is the name for the International Organization for Standards. ISO is a worldwide federation of national standards bodies. The mission of ISO is to promote the development of standardization and related activities in the world. ISO's work results in international agreements which are published as International Standards.


McGILL
CF 2

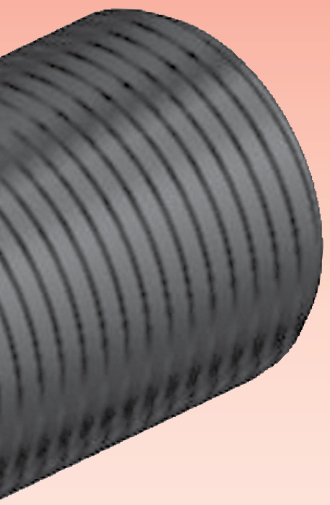

Cam Followers

Unmounted bearing assembly consisting of hardened precision ground inner and outer raceways with either full complement or separated (cage) needle, ball, tapered or cylindrical rolling elements constructed with an integral stud or precision ground bore. Cam follower bearings provide an antifriction solution for translating rotation to linear motion or supporting either pure radial or combination thrust loads depending on the rolling elements types.

Bearing Configurations

Cylindrical, Crowned, V-Groove Or Flanged

Mounting Styles

Eccentric Or Concentric Stud Or Yoke

Outer Roller Diameter Range

1/2” To 10” And 13 mm To 90 mm

Materials

Bearing Quality Steel, Stainless

McGILL® Inch Cam Follower Bearings

Cam Follower Selection Guide

		Product Series	Material / Finish	Size Range: Inch	Size Range: Metric
CAMROL		CF	Black Oxide Finish Bearing Steel	1/2 - 10	
		CYR		3/4 - 10	
		CFH		1/2 - 7	
		BCF		1/2 - 4	
		BCYR		3/4 - 4	
		MCF			16 - 90
		MCFR			13 - 90
		MCYR			5 - 50
		MCYRR			5 - 50
Heavy-Duty		CFD	Black Oxide Finish Bearing Steel	1 1/4 - 6	
		CYRD		1 1/4 - 6	
		MCFD			35 - 80
		MCYRD			15 - 50

* For estimating purpose only, individually sizes may vary and are subject to change without notification

McGill CAMROL Cam Followers are available in 400 series stainless steel components for improved resistance to both external and internal corrosion.

CRES CAMROL bearings are dimensionally interchangeable with standard CAMROL® bearings and easily identifiable with “CR” designation.

Design Characteristics					Features							
Radial Load	Thrust Load	Precision	High Speed	Relative Base Cost *	Crowned OD	Eccentric Stud	Lubrication Holes	Seal	Hex Hole	Slotted Face	Jam Nuts	Page No.
●	○	●	◒	$	O	O	S	O	O	S	-	B-15
●	○	◒	◒	$	O	-	S	O	-	-	-	B-39
●	○	◒	◒	$$	O	-	S	O	O	S	-	B-15
◔	○	◒	◔	$	O	O	S	O	O	S	-	B-45
◔	○	◒	◔	$	O	-	S	O	-	-	-	B-57
◒	○	◒	◒	$	S	O	S	O	O	S	S	B-69
◒	○	◒	◒	$	S	O	S	O	O	S	S	B-69
●	○	◒	◒	$	S	-	S	O	O	-	S	B-91
◒	○	◒	◒	$	S	-	S	O	-	-	S	B-91
◒	◔	◒	◒	$$	O	O	O	S	S	-	-	B-103
●	○	◒	◒	$$	O	-	O	S	-	-	-	B-107
●	○	◒	◒	$$	S	O	S	-	O	S	S	B-111
●	○	◒	◒	$$	S	-	S	-	-	-	-	B-115

Circular Track / Misalignment
Load Sharing / Adjustment To Track
Relubrication To Help Promote Bearing Operating Life
Contamination Barrier
Blind Hole Mounting
Allows The Use Of A Lube Fitting When Lubrication From The Flange Side Of Bearing
Accessories Included

O = Optional
S = Standard
○ = Not Recommended

◔ ◒ ◒ ◒ ●

Poor ⟷ Best

McGILL® Inch Cam Follower Bearings

Cam Follower Selection Guide

		Product Series	Material / Finish	Size Range: Inch	Size Range: Metric
Special Duty		SDCF	Black Oxide Finish Bearing Steel	1 - 4	
		SDMCF			25 - 100
TRAKROL		PCF	Black Oxide Finish Bearing Steel	1 1/2 - 9	
		PCYR		3 - 6	
		FCF		1 1/2 - 9	
		FCYR		3 - 6	
		VCF		2 1/2 - 8 1/2	
		VCYR		3 1/2 - 7 1/2	

McGill CAMROL Cam Followers are available in 400 series stainless steel components for improved resistance to both external and internal corrosion.

CRES CAMROL bearings are dimensionally interchangeable with standard CAMROL® bearings and easily identifiable with “CR” designation.

Design Characteristics					Features							
Radial Load	Thrust Load	Precision	High Speed	Relative Base Cost *	Crowned OD	Eccentric Stud	Lubrication Hole	Seal	Hex Hole	Slotted Face	Jam Nuts	Page No.
◒	○	●	◒	$$$	O	O	-	S	S	-	S	B-123
◒	○	●	◒	$$$	O	O	-	S	S	-	S	B-125
◒	◒	◔	◒	$$	O	O	-	S	-	-	O	B-131
◒	◒	◔	◒	$$	O	-	-	S	S	-	-	B-133
◒	◒	◔	◒	$$$	-	O	-	S	S	-	O	B-135
◒	◒	◔	◒	$$	-	-	-	S	-	-	-	B-137
◒	◒	◔	◒	$$	-	O	-	S	S	-	O	B-139
◒	◒	◔	◒	$$	-	-	-	S	-	-	-	B-141

Circular Track / Misalignment
Load Sharing / Adjustment To Track
Relubrication And Promote Bearing Life
Contamination Barrier
Blind Hole Mounting
Allows The Use Of A Lube Fitting When Lubrication From The Flange Side Of Bearing
Accessories Included

O = Optional
S = Standard
○ = Not Recommended

○ ◔ ◒ ◒ ●

Poor ⟷ Best

* For estimating purpose only, individual costs may vary and are subject to change without notification

McGill Inch Cam Followers

McGill CAMROL bearings are full complement needle bearings feature black oxide treated bearing steel, available in two basic mounting styles for use in mechanical automation or linear motion applications. Our basic features each contribute to improved performance, while the LUBRI-DISC® seal option helps prevent metal to metal contact within the bearing while providing a barrier for contaminant entry and allow venting of excess or old grease during relubrication. In addition to the seal option these bearings are available with several dimensional choices and combinations to provide a specific solution for the application. Within the following section you can learn more about these features and how they can be applied to your application.

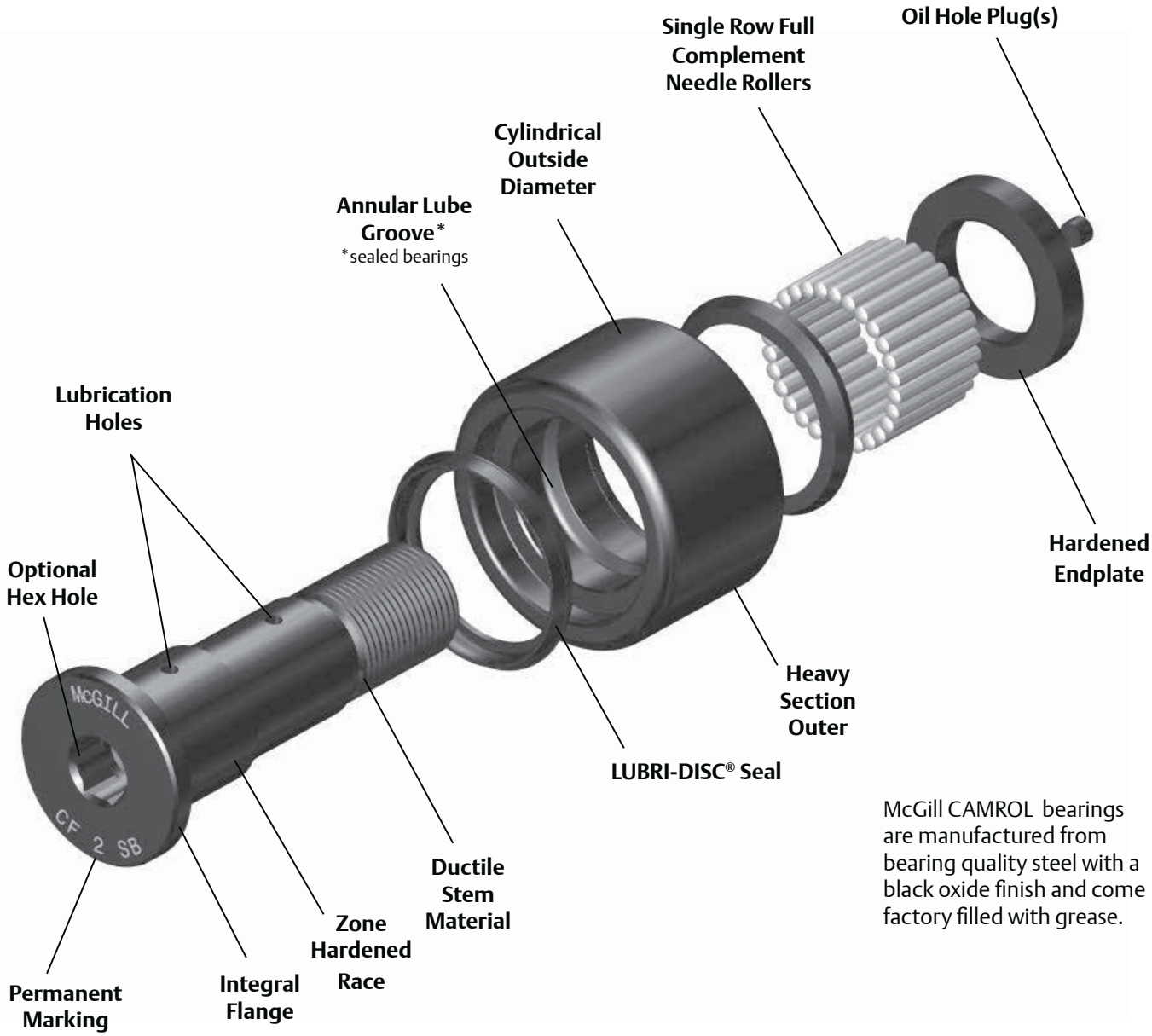

McGill CAMROL bearings are manufactured from bearing quality steel with a black oxide finish and come factory filled with grease.

Cam Follower Inch Nomenclature

C CF E - 1 1/2 - SB

Optional Prefix
- B - Bushing (No Rolling Elements)
- C - Crowned O.D.

Basic Type, Construction
- CF - Cam Follower
- CYR - Cam Yoke Roller
- CFH - Heavy Stud Cam Follower

Construction Suffix
- E - Eccentric Bushing (Std Stud Only)

Size
- Inch Series: O.D. In Inches

Optional Suffix
- N - Narrow Roller Width (1/2 & 5/8 Sizes Only)
- S - LUBRI-DISC® Seal
- B - Hex Hole
- CR - Corrosion Resistant (400 Series CRES)

Features and Benefits

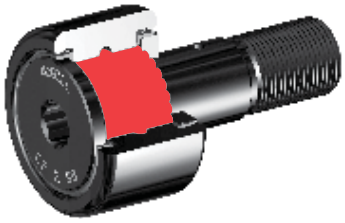

Single Row Full Complement Needle Rollers

The needle roller diameter, length, and number have been optimized to provide a high dynamic and static load rating, contained within industry standard bearing envelope dimensions.

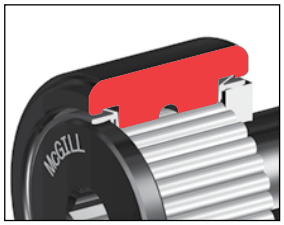

Heavy Section Outer

The heavy section outer helps support radial loading and provide proper rolling element support.

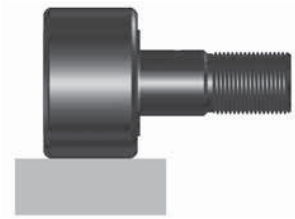

Cylindrical Outside Diameter (OD)

The cylindrical OD can improve performance in certain applications such as improved track capacity by maximizing the contact area with the track.

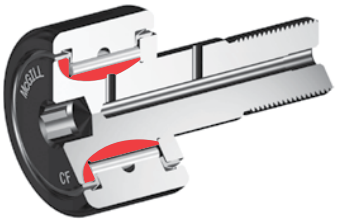

Zone Hardened Raceways

Heat treatment used to precisely harden working surfaces of the raceway and flange. The hardened surfaces provide support for the rolling element contact stresses, while keeping the core of the inner ductile to help absorb shock loads.

Features and Benefits continued

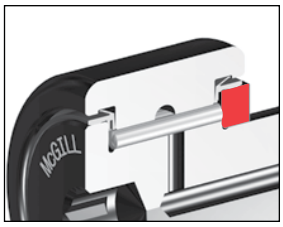

Hardened Endplate

Similar to the flange, the endplate must provide a seal surface for the LUBRI-DISC seal and resist wear from incidental contact with the outer or rollers. The hardened and ground endplate provides a sealing surface with LUBRI-DISC® seal option.

Factory Grease Fill

The cam follower and cam yoke roller bearings are factory lubricated with a medium temperature grease. Contact Application Engineering when application conditions require special lubricants.

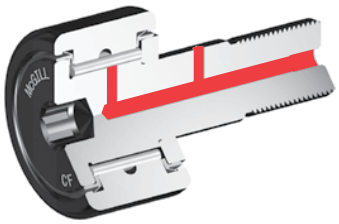

Lubrication Holes

Depending on mounting option, McGill stud type CAMROL bearings may include a lubrication hole to accept a standard drive fitting or an included oil hole plug. The oil hole plug is recommended for closing unused holes to help protect against bearing contamination or lubrication loss.

Yoke Roller Lubrication Hole with Annular groove

McGill CAMROL Yoke roller bearings include a lubrication hole to provide a passage for lubrication to the rolling elements from the yoke roller bore. The customer supplied shaft must provide axial lubrication path to supply bearing. An annular groove in the inner ring bore helps direct lubricant to the hole, making alignment of the shaft and the inner ring holes less critical.

Oil Hole Plug (s)

All McGill stud type Cam followers include 1-2 (depending on # of holes) oil hole plugs to help provide proper lubrication path to the rolling elements and prevent contamination from entering the bearing through an unused oil hole.

Options

Black Oxide Finish

Bearings have a black oxide finish on all external surfaces.

LUBRI-DISC® Seal

The CAMROL standard for seals, the LUBRI-DISC seal helps keep contaminants out and lubrication in the bearing, with an integral back plate to separate the metal to metal contact between the outer ring and endplate(s) or flange. The back plate feature reduces friction resulting in lower operating temperatures which can extend grease life and allowing for higher operating speeds. The seal also includes vents to help prevent seal blowout during relubrication, while the outer raceway is machined with a reservoir for additional lubricant capacity. The LUBRI-DISC seal option has a good balance of sealing, lubricant capacity, and low drag operation essential to a precision cam follower suited for most industrial applications.

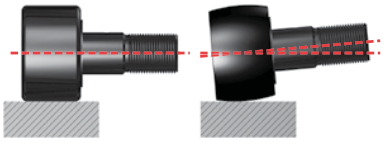

Crowned Outside Diameter (OD)

A crown on the OD of a cam follower bearing can increase bearing life versus a standard cylindrical cam follower. The crown achieves this performance by helping to distribute the stress on the outer ring and rolling elements resulting from misalignment due to mounting inaccuracy or stud deflection. The crown also helps reduce outer skidding in turntable or rotary applications. Not all applications may see the benefit of a crowned OD, consult Application Engineering for guidance for your application.

Heavy Stud Diameter

The increase stem diameter of heavy stud cam followers increases static load capacity of the bearing due to the larger stud diameter. The increase in diameter reduces the amount of deflection that can occur when cam followers are radial loaded. The resultant increase allows a maximum recommended loading of 50% BDR.

*On Heavy-Stud Type Bearings, CFH inch series only

Options continued

Hex Hole (Broached)

The hex hole can aide in the installation and removal of stud type cam followers by increasing the holding power over a standard screw driver slot. The hex feature is identified with a “B” since it is produced using a broach process. Bearing relubrication from flange end must be considered for sizes under 3”.

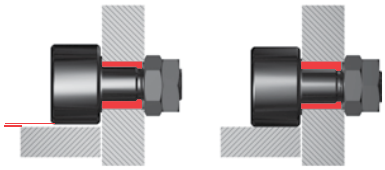

Eccentric Stud

Eccentric stud option provides a means of adjusting the radial position of the bearing which can improve the load sharing of inline bearing combinations. Cam follower load sharing helps reduce operation costs by reducing premature failures due to overloaded bearings, the need of precise mounting hole location tolerances and providing ability to realign bearing due to track wear. Eccentric bushing is press fit on stud and unhardened to permit dowel or setscrew for permanent locking.

Bushing Type

Non-Metallic bushing provides load support with a sliding motion that reduces the need for bearing lubrication for non-food applications where relubrication is not convenient or grease contamination in the process is not acceptable. Max allowable continuous operating temperature up to 200°F. Bushing CAMROL bearings are intended to be used in the self lubricated mode. However, continuous feed oil lubrication can be used to provide reduced wear rates. Grease lubrication should not be used.

Corrosion Resistance

McGill CAMROL Cam Followers are available in 400 series corrosion resistant components for improved resistance to both external and internal corrosion. CRES CAMROL bearings are dimensionally interchangeable with standard CAMROL® bearings and easily identifiable with "CR" designation. Please see page K-3 for more information and availability.

Additional Options

BHT
Hex hole at threaded end of cam follower stud.

THT
Threaded axial lubrication hole at threaded end of cam follower stud.

THF
Threaded axial lubrication hole at flanged end of cam follower stud. Available with all screw driver slot cam followers or broached cam followers over 3”.

THB
Threaded axial oil hole on both ends of cam follower stud. Available with all screw driver slot cam followers or broached cam followers over 3”.

ALG
Annular lubrication groove at cam follower stud radial lubrication hole.

Custom Capabilities

- *Customer specified factory grease fill*
- *Grease fitting installed*
- *Stud or thread length modifications*
- *Roller diameter variations or tolerances*
- *Cam followers grouped or matched diameter tolerance / run out sets*
- *Custom engineered to order designs*

McGILL® Inch Cam Follower Bearings

Basic Construction Type: Stud Type Crowned / Cylindrical Outside Diameter

Rolling Elements: Full Complement Needle Roller

Bearing Material: Bearing Quality Steel

Seal Type: LUBRI-DISC®

Lubrication: Lithium Soap Grease NLGI #2

System Configuration: Concentric / Eccentric / Heavy Stud

Mounting Feature: Slot / Hex Hole

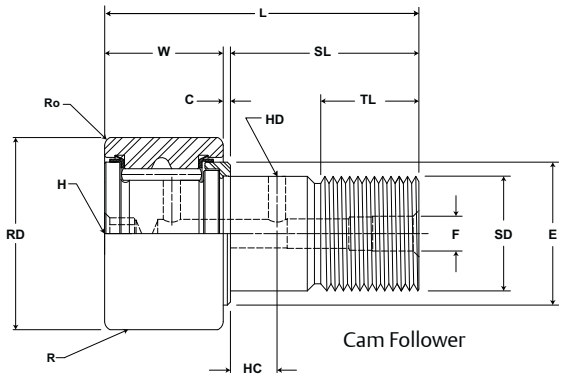

Cam Follower

CF, CFE, CFH

Part No.		RD		W		SD		SL	C	TL	L	R	ECC	G	BD	Track Roller Dynamic Rating	Track Roller Static Rating
W/O Seals	With LUBRI-DISC Seals	Roller Diameter		Roller Width		Stud Diameter		Stud Length	Endplate Extension	Min Thread Length	Length Overall	Crown Prefix CCF-XX	Eccentric Base Modifier CFE-XX				
		inch mm		inch mm		inch mm		inch mm		inch mm		inch mm	inch mm			lb/N	
		Nom.	Tol.	Nom.	Tol.	Nom.	Tol.	(Ref)	(Ref)	(Ref)	(Ref)	Radius (Ref)	(Ref)	+0/-.010	±.001		
CF 1/2 CF 1/2 B CCF 1/2 CCF 1/2 B	CF 1/2 S CF 1/2 SB CCF 1/2 S CCF 1/2 SB	.500 12.70	+0/-.001 +0/-.03	.375 9.53	+0 / -.005 +0 / -.13	.190 4.83	+.001/-0 +.03/-0	.63 15.9	.031 .8	.25 6.4	1.03 26.2	Cylindrical 7 178	N/A	N/A	N/A	680 3,025	790 3,514
CFE 1/2 CFE 1/2 B CCFE 1/2 CCFE 1/2 B	CFE 1/2 S CFE 1/2 SB CCFE 1/2 S CCFE 1/2 SB	.500 12.70	+0/-.001 +0/-.03	.375 9.53	+0 / -.005 +0 / -.13	.190 4.83	+.001/-0 +.03/-0	.63 15.9	.031 .8	.25 6.4	1.03 26.2	Cylindrical 7 178	.010 .25	.375 9.53	.250 6.35	680 3,025	790 3,514
CFH 1/2 CFH 1/2 B CCFH 1/2 CCFH 1/2 B	CFH 1/2 S CFH 1/2 SB CCFH 1/2 S CCFH 1/2 SB	.500 12.70	+0/-.001 +0/-.03	.375 9.53	+0 / -.005 +0 / -.13	.190 4.83	+.001/-0 +.03/-0	.63 15.9	.031 .8	.25 6.4	1.03 26.2	Cylindrical 7 178	N/A	N/A	N/A	680 3,025	1,580 7,028
CF 1/2 N CF 1/2 N B CCF 1/2 N CCF 1/2 N B	CF 1/2 N S CF 1/2 N SB CCF 1/2 N S CCF 1/2 N SB	.500 12.70	+0/-.001 +0/-.03	.344 8.74	+0 / -.005 +0 / -.13	.190 4.83	+.001/-0 +.03/-0	.50 12.7	.031 .8	.25 6.4	.88 22.2	Cylindrical 6 152	N/A	N/A	N/A	620 2,758	720 3,203
CFE 1/2 N CFE 1/2 N B CCFE 1/2 N CCFE 1/2 N B	CFE 1/2 N S CFE 1/2 N SB CCFE 1/2 N S CCFE 1/2 N SB	.500 12.70	+0/-.001 +0/-.03	.344 8.74	+0 / -.005 +0 / -.13	.190 4.83	+.001/-0 +.03/-0	.50 12.7	.031 .8	.25 6.4	.88 22.2	Cylindrical 6 152	.010 .25	.250 6.35	.250 6.35	620 2,758	720 3,203
CF 9/16 CF 9/16 B CCF 9/16 CCF 9/16 B	CF 9/16 S CF 9/16 SB CCF 9/16 S CCF 9/16 SB	.5625 14.29	+0/-.001 +0/-.03	.375 9.53	+0 / -.005 +0 / -.13	.190 4.83	+.001/-0 +.03/-0	.63 15.9	.031 .8	.25 6.4	1.03 26.2	Cylindrical 7 178	N/A	N/A	N/A	680 3,025	790 3,514
CFE 9/16 CFE 9/16 B CCFE 9/16 CCFE 9/16 B	CFE 9/16 S CFE 9/16 SB CCFE 9/16 S CCFE 9/16 SB	.5625 14.29	+0/-.001 +0/-.03	.375 9.53	+0 / -.005 +0 / -.13	.190 4.83	+.001/-0 +.03/-0	.63 15.9	.031 .8	.25 6.4	1.03 26.2	Cylindrical 7 178	.010 .25	.375 9.53	.250 6.35		
CFH 9/16 CFH 9/16 B CCFH 9/16 CCFH 9/16 B	CFH 9/16 S CFH 9/16 SB CCFH 9/16 S CCFH 9/16 SB	.5625 14.29	+0/-.001 +0/-.03	.375 9.53	+0 / -.005 +0 / -.13	.250 6.35	+.001/-0 +.03/-0	.63 15.9	.031 .8	.25 6.4	1.03 26.2	Cylindrical 7 178	N/A	N/A	N/A	680 3,025	1,580 7,028

Metric dimensions for reference only.
Hex wrench size for "Broached" version is located in the wrench size chart on page B-156.
Not all parts are available from stock. Please contact customer service for availability (800) 626-2120.
For more information on bearing capabilities outside of our standard offering, please contact Application Engineering (800) 626-2093.

Inch Cam Follower Bearings

McGILL®

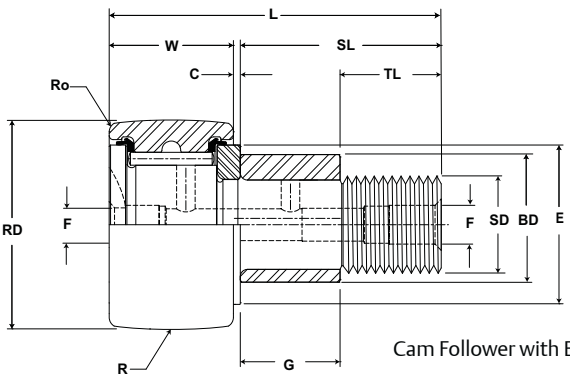

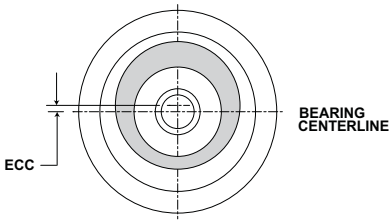

Cam Follower with Eccentric Bushing

CF, CFE, CFH

Part No.		HC	HD	F	E	Ro	HBD		Thread Type	Clamping Torque	Limiting Speed (Grease)	WT
W/O Seals	With LUBRI-DISC Seals	Hole Center	Radial Hole Diameter	Axial Hole Dia or Fitting	Min Boss Diameter	Outer Corner	Housing Bore Diameter					Bearing Weight
		inch mm			inch mm		inch mm			in-lb Nm	RPM	lb kg
		(Ref)	(Ref)	(Ref)	(Ref)	(Ref)	Nom.	Tol.				
CF 1/2 CF 1/2 B CCF 1/2 CCF 1/2 B	CF 1/2 S CF 1/2 SB CCF 1/2 S CCF 1/2 SB	-	-	.125 3.175	.410 10.41	.016 .40 N/A	.1903 4.834	+.0002/-.0003 +.0005/-.0008	10-32	15 2	11,500	.04 .02
CFE 1/2 CFE 1/2 B CCFE 1/2 CCFE 1/2 B	CFE 1/2 S CFE 1/2 SB CCFE 1/2 S CCFE 1/2 SB	-	-	.125 3.175	.410 10.41	.016 .40 N/A	.253 6.42	+.001/-.001 +.025/-.025	10-32	15 2	11,500	.04 .02
CFH 1/2 CFH 1/2 B CCFH 1/2 CCFH 1/2 B	CFH 1/2 S CFH 1/2 SB CCFH 1/2 S CCFH 1/2 SB	-	-	.125 3.175	.410 10.41	.016 .40 N/A	.2503 6.358	+.0002/-.0003 +.0005/-.0008	1/4-28	35 4	11,500	.04 .02
CF 1/2 N CF 1/2 N B CCF 1/2 N CCF 1/2 N B	CF 1/2 N S CF 1/2 N SB CCF 1/2 N S CCF 1/2 N SB	-	-	.125 3.175	.410 10.41	.016 .40 N/A	.1903 4.834	+.0002/-.0003 +.0005/-.0008	10-32	15 2	11,500	.04 .02
CFE 1/2 N CFE 1/2 N B CCFE 1/2 N CCFE 1/2 N B	CFE 1/2 N S CFE 1/2 N SB CCFE 1/2 N S CCFE 1/2 N SB	-	-	.125 3.175	.410 10.41	.016 .40 N/A	.253 6.42	+.001/-.001 +.025/-.025	10-32	15 2	11,500	.04 .02
CF 9/16 CF 9/16 B CCF 9/16 CCF 9/16 B	CF 9/16 S CF 9/16 SB CCF 9/16 S CCF 9/16 SB	-	-	.125 3.175	.410 10.41	.016 .40 N/A	.1903 4.834	+.0002/-.0003 +.0005/-.0008	10-32	15 2	10,000	.04 .02
CFE 9/16 CFE 9/16 B CCFE 9/16 CCFE 9/16 B	CFE 9/16 S CFE 9/16 SB CCFE 9/16 S CCFE 9/16 SB	-	-	.125 3.175		.016 .40 N/A	.253 6.42	+.001/-.001 +.025/-.025				
CFH 9/16 CFH 9/16 B CCFH 9/16 CCFH 9/16 B	CFH 9/16 S CFH 9/16 SB CCFH 9/16 S CCFH 9/16 SB	-	-	.125 3.175	.410 10.41	.016 .40 N/A	.2503 6.358	+.0002/-.0003 +.0005/-.0008	1/4-28	35 4	10,000	.04 .02

For positive clamping, use housing thickness equal to G dimension =.010".
Clamping torque is based on dry threads. If threads are lubricated, use half of value shown.
Hex wrench size for "Broached" version is located in the wrench size chart on page B-156.

McGILL® Inch Cam Follower Bearings

Basic Construction Type: Stud Type Crowned / Cylindrical Outside Diameter

Rolling Elements: Full Complement Needle Roller

Bearing Material: Bearing Quality Steel

Seal Type: LUBRI-DISC®

Lubrication: Lithium Soap Grease NLGI #2

System Configuration: Concentric / Eccentric / Heavy Stud

Mounting Feature: Slot / Hex Hole

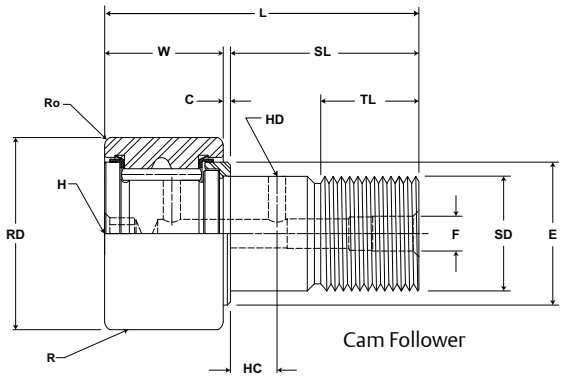

Cam Follower

CF, CFE, CFH

Part No.		RD		W		SD		SL	C	TL	L	R	ECC	G	BD	Track Roller Dynamic Rating	Track Roller Static Rating
W/O Seals	With LUBRI-DISC Seals	Roller Diameter		Roller Width		Stud Diameter		Stud Length	Endplate Extension	Min Thread Length	Length Overall	Crown Prefix CCF-XX	Eccentric Base Modifier CFE-XX				
		inch mm		inch mm		inch mm		inch mm		inch mm		inch mm	inch mm			lb/N	
		Nom.	Tol.	Nom.	Tol.	Nom.	Tol.	(Ref)	(Ref)	(Ref)	(Ref)	Radius (Ref)	(Ref)	+0/-.010	±.001		
CF 5/8	CF 5/8 S	.625 15.88	+0/-.001 +0/-.03	.438 11.11	+0 / -.005 +0 / -.13	.250 6.35	+.001/-0 +.03/-0	.75 19.1	.031 .8	.31 7.9	1.22 31.0	Cylindrical	N/A	N/A	N/A	955 4,248	1,215 5,404
CF 5/8 B	CF 5/8 SB											8 203					
CCF 5/8	CCF 5/8 S																
CCF 5/8 B	CCF 5/8 SB																
CFE 5/8	CFE 5/8 S	.625 15.88	+0/-.001 +0/-.03	.438 11.11	+0 / -.005 +0 / -.13	.250 6.35	+.001/-0 +.03/-0	.75 19.1	.031 .8	.31 7.9	1.22 31.0	Cylindrical	.015 .38	.437 11.10	.375 9.53		
CFE 5/8 B	CFE 5/8 SB											8 203					
CCFE 5/8	CCFE 5/8 S																
CCFE 5/8 B	CCFE 5/8 SB																
CFH 5/8	CFH 5/8 S	.625 15.88	+0/-.001 +0/-.03	.438 11.11	+0 / -.005 +0 / -.13	.3125 7.94	+.001/-0 +.03/-0	.75 19.1	.031 .8	.31 7.9	1.22 31.0	Cylindrical	N/A	N/A	N/A	955 4,248	2,480 11,031
CFH 5/8 B	CFH 5/8 SB											8 203					
CCFH 5/8	CCFH 5/8 S																
CCFH 5/8 B	CCFH 5/8 SB																
CF 5/8 N	CF 5/8 N S	.625 15.88	+0/-.001 +0/-.03	.406 10.31	+0 / -.005 +0 / -.13	.250 6.35	+.001/-0 +.03/-0	.63 15.9	.031 .8	.31 7.9	1.06 27.0	Cylindrical	N/A	N/A	N/A	930 4,137	1,085 4,826
CF 5/8 N B	CF 5/8 N SB											7 178					
CCF 5/8 N	CCF 5/8 N S																
CCF 5/8 N B	CCF 5/8 N SB																
CCFE 5/8 N													.015 .38	.437 11.10	.375 9.53		
CF 11/16	CF 11/16 S	.688 17.46	+0/-.001 +0/-.03	.438 11.11	+0 / -.005 +0 / -.13	.250 6.35	+.001/-0 +.03/-0	.75 19.1	.031 .8	.31 7.9	1.22 31.0	Cylindrical	N/A	N/A	N/A	955 4,248	1,215 5,404
CF 11/16 B	CF 11/16 SB											8 203					
CCF 11/16	CCF 11/16 S																
CCF 11/16 B	CCF 11/16 SB																
CFE 11/16	CFE 11/16 S	.688 17.46	+0/-.001 +0/-.03	.438 11.11	+0 / -.005 +0 / -.13	.250 6.35	+.001/-0 +.03/-0	.75 19.1	.031 .8	.31 7.9	1.22 31.0	Cylindrical	.015 .38	.437 11.10	.375 9.53		
CFE 11/16 B	CFE 11/16 SB											8 203					
CCFE 11/16	CCFE 11/16 S																
CCFE 11/16 B	CCFE 11/16 SB																
CFH 11/16	CFH 11/16 S	.688 17.46	+0/-.001 +0/-.03	.438 11.11	+0 / -.005 +0 / -.13	.3125 7.94	+.001/-0 +.03/-0	.75 19.1	.031 .8	.31 7.9	1.22 31.0	Cylindrical	N/A	N/A	N/A	955 4,248	2,480 11,031
CFH 11/16 B	CFH 11/16 SB											8 203					
CCFH 11/16	CCFH 11/16 S																
CCFH 11/16 B	CCFH 11/16 SB																

Metric dimensions for reference only.
Hex wrench size for "Broached" version is located in the wrench size chart on page B-156.

Not all parts are available from stock. Please contact customer service for availability (800) 626-2120.
For more information on bearing capabilities outside of our standard offering, please contact Application Engineering (800) 626-2093.

Inch Cam Follower Bearings

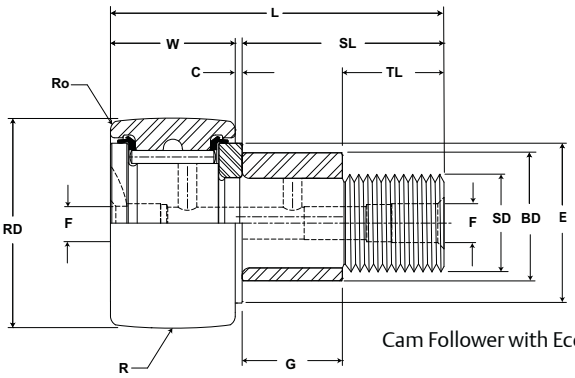

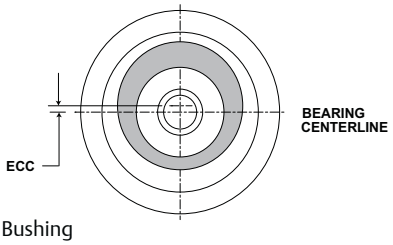

Cam Follower with Eccentric Bushing

CF, CFE, CFE

Part No.		HC	HD	F	E	Ro	HBD		Thread Type	Clamping Torque	Limiting Speed (Grease)	WT
W/O Seals	With LUBRI-DISC Seals	Hole Center	Radial Hole Diameter	Axial Hole Dia or Fitting	Min Boss Diameter	Outer Corner	Housing Bore Diameter					Bearing Weight
		inch mm			inch mm		inch mm			in-lb Nm	RPM	lb kg
		(Ref)	(Ref)	(Ref)	(Ref)	(Ref)	Nom.	Tol.				
CF 5/8 CF 5/8 B CCF 5/8 CCF 5/8 B	CF 5/8 S CF 5/8 SB CCF 5/8 S CCF 5/8 SB	-	-	.125 3.175	.462 11.73	.016 .40	.2503 6.358	+.0002/-.0003 +.0005/-.0008	1/4-28	35 4	9,200	.05 .02
						N/A						
CFE 5/8 CFE 5/8 B CCFE 5/8 CCFE 5/8 B	CFE 5/8 S CFE 5/8 SB CCFE 5/8 S CCFE 5/8 SB	-	-	.125 3.175		.016 .40	.378 9.60	+.001/-.001 +.025/-.025				
						N/A						
CFH 5/8 CFH 5/8 B CCFH 5/8 CCFH 5/8 B	CFH 5/8 S CFH 5/8 SB CCFH 5/8 S CCFH 5/8 SB	-	-	.125 3.175	.462 11.73	.016 .40	.3128 7.945	+.0002/-.0003 +.0005/-.0008	5/16-24	90 10	9,200	.05 .02
						N/A						
CF 5/8 N CF 5/8 N B CCF 5/8 N CCF 5/8 N B CCFE 5/8 N	CF 5/8 N S CF 5/8 N SB CCF 5/8 N S CCF 5/8 N SB	-	-	.125 3.175	.462 11.73	.016 .40	.2503 6.358	+.0002/-.0003 +.0005/-.0008	1/4-28	35 4	9,200	.05 .02
						N/A						
CF 11/16 CF 11/16 B CCF 11/16 CCF 11/16 B	CF 11/16 S CF 11/16 SB CCF 11/16 S CCF 11/16 SB	-	-	.125 3.175	.462 11.73	.016 .40	.2503 6.358	+.0002/-.0003 +.0005/-.0008	1/4-28	35 4	8,300	.06 .03
						N/A						
CFE 11/16 CFE 11/16 B CCFE 11/16 CCFE 11/16 B	CFE 11/16 S CFE 11/16 SB CCFE 11/16 S CCFE 11/16 SB	-	-	.125 3.175		.016 .40	.378 9.60	+.001/-.001 +.025/-.025				
						N/A						
CFH 11/16 CFH 11/16 B CCFH 11/16 CCFH 11/16 B	CFH 11/16 S CFH 11/16 SB CCFH 11/16 S CCFH 11/16 SB	-	-	.125 3.175	.462 11.73	.016 .40	.3128 7.945	+.0002/-.0003 +.0005/-.0008	5/16-24	90 10	8,300	.06 .03
						N/A						

For positive clamping, use housing thickness equal to G dimension =.010".
Clamping torque is based on dry threads. If threads are lubricated, use half of value shown.
Hex wrench size for "Broached" version is located in the wrench size chart on page B-156.

McGILL® Inch Cam Follower Bearings

Basic Construction Type: Stud Type Crowned / Cylindrical Outside Diameter

Rolling Elements: Full Complement Needle Roller

Bearing Material: Bearing Quality Steel

Seal Type: LUBRI-DISC®

Lubrication: Lithium Soap Grease NLGI #2

System Configuration: Concentric / Eccentric / Heavy Stud

Mounting Feature: Slot / Hex Hole

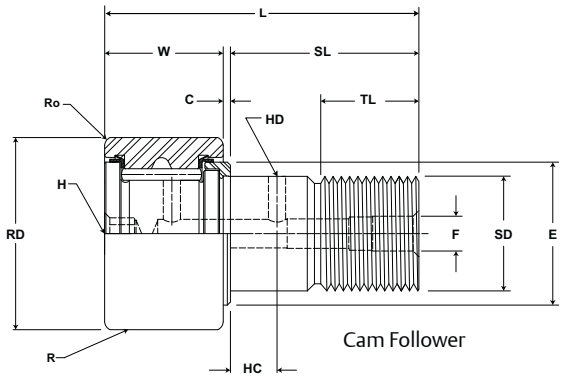

Cam Follower

CF, CFE, CFH

Part No.		RD		W		SD		SL	C	TL	L	R	ECC	G	BD	Track Roller Dynamic Rating	Track Roller Static Rating
W/O Seals	With LUBRI-DISC Seals	Roller Diameter		Roller Width		Stud Diameter		Stud Length	Endplate Extension	Min Thread Length	Length Overall	Crown Prefix CCF-XX	Eccentric Base Modifier CFE-XX				
		inch mm		inch mm		inch mm		inch mm		inch mm		inch mm	inch mm			lb/N	
		Nom.	Tol.	Nom.	Tol.	Nom.	Tol.	(Ref)	(Ref)	(Ref)	(Ref)	Radius (Ref)	(Ref)	+0/-.010	±.001		
CF 3/4 CF 3/4 B CCF 3/4 CCF 3/4 B	CF 3/4 S CF 3/4 SB CCF 3/4 S CCF 3/4 SB	.750 19.05	+0/-.001 +0/-.03	.500 12.70	+0 / -.005 +0 / -.13	.375 9.53	+.001/-0 +.03/-0	.88 22.2	.031 .8	.38 9.5	1.41 35.7	Cylindrical 10 254	N/A	N/A	N/A	1,660 7,384	2,065 9,185
CFE 3/4 CFE 3/4 B CCFE 3/4 CCFE 3/4 B	CFE 3/4 S CFE 3/4 SB CCFE 3/4 S CCFE 3/4 SB	.750 19.05	+0/-.001 +0/-.03	.500 12.70	+0 / -.005 +0 / -.13	.375 9.53	+.001/-0 +.03/-0	.88 22.2	.031 .8	.38 9.5	1.41 35.7	Cylindrical 10 254	.015 .38	.500 12.70	.500 12.70		
CFH 3/4 CFH 3/4 B CCFH 3/4 CCFH 3/4 B	CFH 3/4 S CFH 3/4 SB CCFH 3/4 S CCFH 3/4 SB	.750 19.05	+0/-.001 +0/-.03	.500 12.70	+0 / -.005 +0 / -.13	.4375 11.11	+.001/-0 +.03/-0	.88 22.2	.031 .8	.38 9.5	1.41 35.7	Cylindrical 10 254	N/A	N/A	N/A	1,660 7,384	4,130 18,370
CF 7/8 CF 7/8 B CCF 7/8 CCF 7/8 B	CF 7/8 S CF 7/8 SB CCF 7/8 S CCF 7/8 SB	.875 22.23	+0/-.001 +0/-.03	.500 12.70	+0 / -.005 +0 / -.13	.375 9.53	+.001/-0 +.03/-0	.88 22.2	.031 .8	.38 9.5	1.41 35.7	Cylindrical 10 254	N/A	N/A	N/A	1,660 7,384	2,065 9,185
CFE 7/8 CFE 7/8 B CCFE 7/8 CCFE 7/8 B	CFE 7/8 S CFE 7/8 SB CCFE 7/8 S CCFE 7/8 SB	.875 22.23	+0/-.001 +0/-.03	.500 12.70	+0 / -.005 +0 / -.13	.375 9.53	+.001/-0 +.03/-0	.88 22.2	.031 .8	.38 9.5	1.41 35.7	Cylindrical 10 254	.015 .38	.500 12.70	.500 12.70		
CFH 7/8 CFH 7/8 B CCFH 7/8 CCFH 7/8 B	CFH 7/8 S CFH 7/8 SB CCFH 7/8 S CCFH 7/8 SB	.875 22.23	+0/-.001 +0/-.03	.500 12.70	+0 / -.005 +0 / -.13	.4375 11.11	+.001/-0 +.03/-0	.88 22.2	.031 .8	.38 9.5	1.41 35.7	Cylindrical 10 254	N/A	N/A	N/A	1,660 7,384	4,130 18,370

Metric dimensions for reference only.
Hex wrench size for "Broached" version is located in the wrench size chart on page B-156.

Not all parts are available from stock. Please contact customer service for availability (800) 626-2120.
For more information on bearing capabilities outside of our standard offering, please contact Application Engineering (800) 626-2093.

Inch Cam Follower Bearings

McGILL®

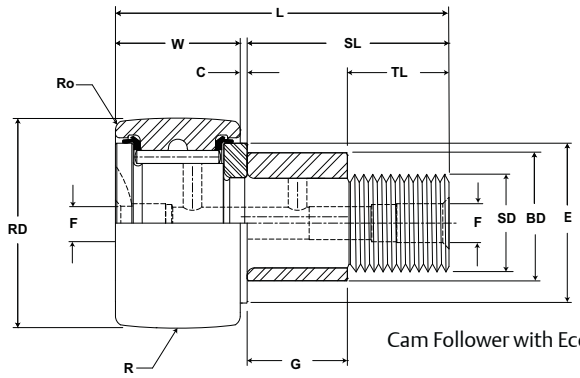

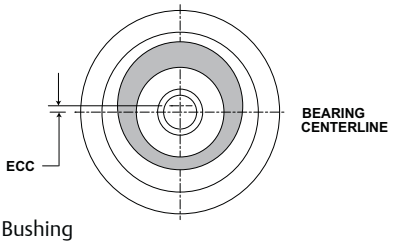

Cam Follower with Eccentric Bushing

CF, CFE, CFH

Part No.		HC	HD	F	E	Ro	HBD		Thread Type	Clamping Torque	Limiting Speed (Grease)	WT
W/O Seals	With LUBRI-DISC Seals	Hole Center	Radial Hole Diameter	Axial Hole Dia or Fitting	Min Boss Diameter	Outer Corner	Housing Bore Diameter					Bearing Weight
		inch mm			inch mm		inch mm			in-lb Nm	RPM	lb kg
		(Ref)	(Ref)	(Ref)	(Ref)	(Ref)	Nom.	Tol.				
CF 3/4 CF 3/4 B CCF 3/4 CCF 3/4 B	CF 3/4 S CF 3/4 SB CCF 3/4 S CCF 3/4 SB	.25 6	.0938 2	.1875 5	.609 15.48	.016 .40	.3753 9.533	+.0002/-.0003 +.0005/-.0008	3/8-24	95 11	6,400	.07 .03
						N/A						
CFE 3/4 CFE 3/4 B CCFE 3/4 CCFE 3/4 B	CFE 3/4 S CFE 3/4 SB CCFE 3/4 S CCFE 3/4 SB	.25 6	.0938 2	.1875 5		.016 .40	.503 12.77	+.001/-.001 +.025/-.025				
						N/A						
CFH 3/4 CFH 3/4 B CCFH 3/4 CCFH 3/4 B	CFH 3/4 S CFH 3/4 SB CCFH 3/4 S CCFH 3/4 SB	.25 6	.0938 2	.1875 5	.609 15.48	.016 .40	.4378 11.120	+.0002/-.0003 +.0005/-.0008	7/16-20	250 28	6,400	.08 .04
						N/A						
CF 7/8 CF 7/8 B CCF 7/8 CCF 7/8 B	CF 7/8 S CF 7/8 SB CCF 7/8 S CCF 7/8 SB	.25 6	.0938 2	.1875 5	.609 15.48	.016 .40	.3753 9.533	+.0002/-.0003 +.0005/-.0008	3/8-24	95 11	5,400	.09 .04
						N/A						
CFE 7/8 CFE 7/8 B CCFE 7/8 CCFE 7/8 B	CFE 7/8 S CFE 7/8 SB CCFE 7/8 S CCFE 7/8 SB	.25 6	.0938 2	.1875 5		.016 .40	.503 12.77	+.001/-.001 +.025/-.025				
						N/A						
CFH 7/8 CFH 7/8 B CCFH 7/8 CCFH 7/8 B	CFH 7/8 S CFH 7/8 SB CCFH 7/8 S CCFH 7/8 SB	.25 6	.0938 2	.1875 5	.609 15.48	.016 .40	.4378 11.120	+.0002/-.0003 +.0005/-.0008	7/16-20	250 28	5,400	.11 .05
						N/A						

For positive clamping, use housing thickness equal to G dimension =.010".
Clamping torque is based on dry threads. If threads are lubricated, use half of value shown.
Hex wrench size for "Broached" version is located in the wrench size chart on page B-156.

McGILL® Inch Cam Follower Bearings

Basic Construction Type: Stud Type Crowned / Cylindrical Outside Diameter

Rolling Elements: Full Complement Needle Roller

Bearing Material: Bearing Quality Steel

Seal Type: LUBRI-DISC®

Lubrication: Lithium Soap Grease NLGI #2

System Configuration: Concentric / Eccentric / Heavy Stud

Mounting Feature: Slot / Hex Hole

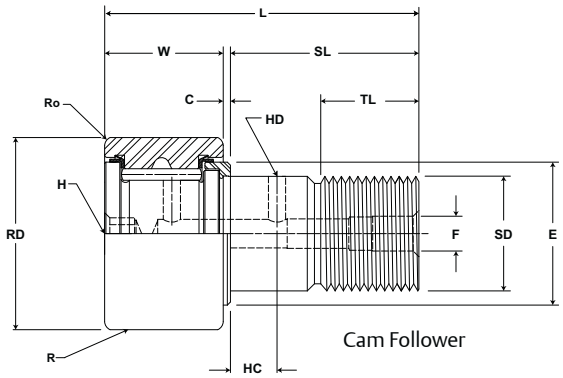

Cam Follower

CF, CFE, CFH

Part No.		RD		W		SD		SL	C	TL	L	R	ECC	G	BD	Track Roller Dynamic Rating	Track Roller Static Rating
W/O Seals	With LUBRI-DISC Seals	Roller Diameter		Roller Width		Stud Diameter		Stud Length	Endplate Extension	Min Thread Length	Length Overall	Crown Prefix CCF-XX	Eccentric Base Modifier CFE-XX				
		inch mm		inch mm		inch mm		inch mm		inch mm		inch mm	inch mm			lb/N	
		Nom.	Tol.	Nom.	Tol.	Nom.	Tol.	(Ref)	(Ref)	(Ref)	(Ref)	Radius (Ref)	(Ref)	+0/-.010	±.001		
CF 1 CF 1 B CCF 1 CCF 1 B	CF 1 S CF 1 SB CCF 1 S CCF 1 SB	1.000 25.40	+0/-.001 +0/-.03	.625 15.88	+0 / -.005 +0 / -.13	.4375 11.11	+.001/-0 +.03/-0	1.00 25.4	.031 .8	.50 12.7	1.66 42.1	Cylindrical 12 305	N/A	N/A	N/A	2,225 9,897	3,060 13,611
CFE 1 CFE 1 B CCFE 1 CCFE 1 B	CFE 1 S CFE 1 SB CCFE 1 S CCFE 1 SB	1.000 25.40	+0/-.001 +0/-.03	.625 15.88	+0 / -.005 +0 / -.13	.4375 11.11	+.001/-0 +.03/-0	1.00 25.4	.031 .8	.50 12.7	1.66 42.1	Cylindrical 12 305	.030 .76	.500 12.70	.625 15.88		
CFH 1 CFH 1 B CCFH 1 CCFH 1 B	CFH 1 S CFH 1 SB CCFH 1 S CCFH 1 SB	1.000 25.40	+0/-.001 +0/-.03	.625 15.88	+0 / -.005 +0 / -.13	.625 15.88	+.001/-0 +.03/-0	1.00 25.4	.031 .8	.50 12.7	1.66 42.1	Cylindrical 12 305	N/A	N/A	N/A	2,225 9,897	6,120 27,222
CF 1 1/8 CF 1 1/8 B CCF 1 1/8 CCF 1 1/8 B	CF 1 1/8 S CF 1 1/8 SB CCF 1 1/8 S CCF 1 1/8 SB	1.125 28.58	+0/-.001 +0/-.03	.625 15.88	+0 / -.005 +0 / -.13	.4375 11.11	+.001/-0 +.03/-0	1.00 25.4	.031 .8	.50 12.7	.031 .8	Cylindrical 12 305	N/A	N/A	N/A	2,225 9,897	3,060 13,611
CFE 1 1/8 CFE 1 1/8 B CCFE 1 1/8 CCFE 1 1/8 B	CFE 1 1/8 S CFE 1 1/8 SB CCFE 1 1/8 S CCFE 1 1/8 SB	1.125 28.58	+0/-.001 +0/-.03	.625 15.88	+0 / -.005 +0 / -.13	.4375 11.11	+.001/-0 +.03/-0	1.00 25.4	.031 .8	.50 12.7	1.66 42.1	Cylindrical 12 305	.030 .76	.500 12.70	.625 15.88		
CFH 1 1/8 CFH 1 1/8 B CCFH 1 1/8 CCFH 1 1/8 B	CFH 1 1/8 S CFH 1 1/8 SB CCFH 1 1/8 S CCFH 1 1/8 SB	1.125 28.58	+0/-.001 +0/-.03	.625 15.88	+0 / -.005 +0 / -.13	.625 15.88	+.001/-0 +.03/-0	1.00 25.4	.031 .8	.50 12.7	1.66 42.1	Cylindrical 12 305	N/A	N/A	N/A	2,225 9,897	6,120 27,222

Metric dimensions for reference only.
Hex wrench size for "Broached" version is located in the wrench size chart on page B-156.

Not all parts are available from stock. Please contact customer service for availability (800) 626-2120.
For more information on bearing capabilities outside of our standard offering, please contact Application Engineering (800) 626-2093.

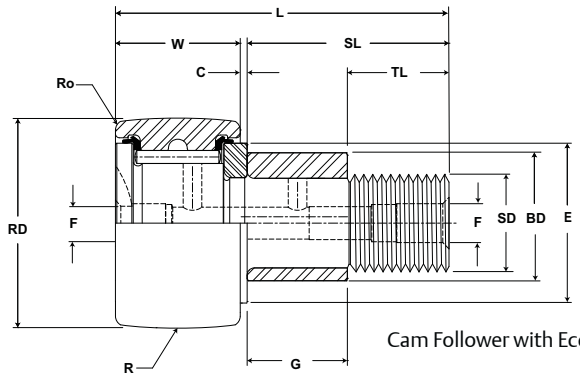

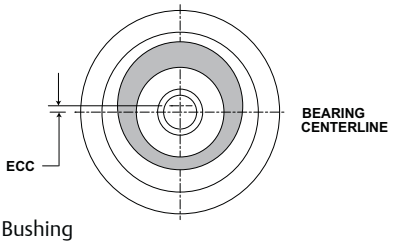

Cam Follower with Eccentric Bushing

CF, CFE, CFH

Part No.		HC	HD	F	E	Ro	HBD		Thread Type	Clamping Torque	Limiting Speed (Grease)	WT
W/O Seals	With LUBRI-DISC Seals	Hole Center	Radial Hole Diameter	Axial Hole Dia or Fitting	Min Boss Diameter	Outer Corner	Housing Bore Diameter					Bearing Weight
		inch mm			inch mm		inch mm			in-lb Nm	RPM	lb kg
		(Ref)	(Ref)	(Ref)	(Ref)	(Ref)	Nom.	Tol.				
CF 1 CF 1 B CCF 1 CCF 1 B	CF 1 S CF 1 SB CCF 1 S CCF 1 SB	.25 6	.0938 2	.1875 5	.781 19.84	.031 .79	.4378 11.120	+.0002/-.0003 +.0005/-.0008	7/16-20	250 28	4,800	.17 .08
						N/A						
CFE 1 CFE 1 B CCFE 1 CCFE 1 B	CFE 1 S CFE 1 SB CCFE 1 S CCFE 1 SB	.25 6	.0938 2	.1875 5		.031 .79	.628 15.95	+.001/-.001 +.025/-.025				
						N/A						
CFH 1 CFH 1 B CCFH 1 CCFH 1 B	CFH 1 S CFH 1 SB CCFH 1 S CCFH 1 SB	.25 6	.0938 2	.1875 5	.781 19.84	.031 .79	.6253 15.883	+.0002/-.0003 +.0005/-.0008	5/8-18	650 73	4,800	.20 .09
						N/A						
CF 1 1/8 CF 1 1/8 B CCF 1 1/8 CCF 1 1/8 B	CF 1 1/8 S CF 1 1/8 SB CCF 1 1/8 S CCF 1 1/8 SB	.25 6	.0938 2	.1875 5	.781 19.84	.031 .79	.4378 11.120	+.0002/-.0003 +.0005/-.0008	7/16-20	250 28	3,400	.19 .09
						N/A						
CFE 1 1/8 CFE 1 1/8 B CCFE 1 1/8 CCFE 1 1/8 B	CFE 1 1/8 S CFE 1 1/8 SB CCFE 1 1/8 S CCFE 1 1/8 SB	.25 6	.0938 2	.1875 5		.031 .79	.628 15.95	+.001/-.001 +.025/-.025				
						N/A						
CFH 1 1/8 CFH 1 1/8 B CCFH 1 1/8 CCFH 1 1/8 B	CFH 1 1/8 S CFH 1 1/8 SB CCFH 1 1/8 S CCFH 1 1/8 SB	.25 6	.0938 2	.1875 5	.781 19.84	.031 .79	.6253 15.883	+.0002/-.0003 +.0005/-.0008	5/8-18	650 73	3,400	.24 .11
						N/A						

For positive clamping, use housing thickness equal to G dimension =.010".
Clamping torque is based on dry threads. If threads are lubricated, use half of value shown.
Hex wrench size for "Broached" version is located in the wrench size chart on page B-156.

McGILL® Inch Cam Follower Bearings

Basic Construction Type: Stud Type Crowned / Cylindrical Outside Diameter

Rolling Elements: Full Complement Needle Roller

Bearing Material: Bearing Quality Steel

Seal Type: LUBRI-DISC®

Lubrication: Lithium Soap Grease NLGI #2

System Configuration: Concentric / Eccentric / Heavy Stud

Mounting Feature: Slot / Hex Hole

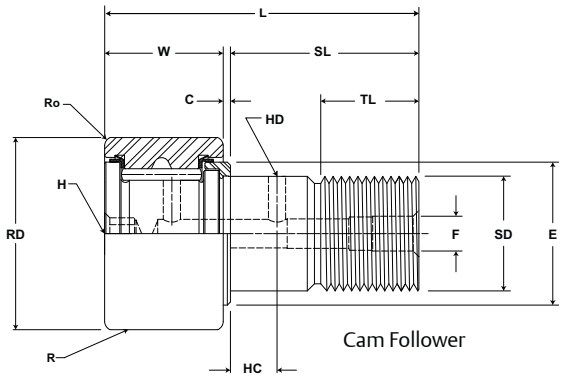

Cam Follower

CF, CFE, CFH

Part No.		RD		W		SD		SL	C	TL	L	R	ECC	G	BD	Track Roller Dynamic Rating	Track Roller Static Rating
W/O Seals	With LUBRI-DISC Seals	Roller Diameter		Roller Width		Stud Diameter		Stud Length	Endplate Extension	Min Thread Length	Length Overall	Crown Prefix CCF-XX	Eccentric Base Modifier CFE-XX				
		inch mm		inch mm		inch mm		inch mm		inch mm		inch mm	inch mm			lb/N	
		Nom.	Tol.	Nom.	Tol.	Nom.	Tol.	(Ref)	(Ref)	(Ref)	(Ref)	Radius (Ref)	(Ref)	+0/-.010	±.001		
CF 1 1/4 CF 1 1/4 B CCF 1 1/4 CCF 1 1/4 B	CF 1 1/4 S CF 1 1/4 SB CCF 1 1/4 S CCF 1 1/4 SB	1.250 31.75	+0/-.001 +0/-.03	.750 19.05	+0 / -.005 +0 / -.13	.500 12.70	+.001/-0 +.03/-0	1.25 31.8	.031 .8	.63 15.9	2.03 51.6	Cylindrical 14 356	N/A	N/A	N/A	3,930 17,481	4,250 18,904
CFE 1 1/4 CFE 1 1/4 B CCFE 1 1/4 CCFE 1 1/4 B	CFE 1 1/4 S CFE 1 1/4 SB CCFE 1 1/4 S CCFE 1 1/4 SB	1.250 31.75	+0/-.001 +0/-.03	.750 19.05	+0 / -.005 +0 / -.13	.500 12.70	+.001/-0 +.03/-0	1.25 31.8	.031 .8	.63 15.9	2.03 51.6	Cylindrical 14 356	.030 .76	.625 15.88	.687 17.45		
CFH 1 1/4 CFH 1 1/4 B CCFH 1 1/4 CCFH 1 1/4 B	CFH 1 1/4 S CFH 1 1/4 SB CCFH 1 1/4 S CCFH 1 1/4 SB	1.250 31.75	+0/-.001 +0/-.03	.750 19.05	+0 / -.005 +0 / -.13	.750 19.05	+.001/-0 +.03/-0	1.25 31.8	.031 .8	.63 15.9	2.03 51.6	Cylindrical 14 356	N/A	N/A	N/A	3,930 17,481	8,500 37,808
CF 1 3/8 CF 1 3/8 B CCF 1 3/8 CCF 1 3/8 B	CF 1 3/8 S CF 1 3/8 SB CCF 1 3/8 S CCF 1 3/8 SB	1.375 34.93	+0/-.001 +0/-.03	.750 19.05	+0 / -.005 +0 / -.13	.500 12.70	+.001/-0 +.03/-0	1.25 31.8	.031 .8	.63 15.9	2.03 51.6	Cylindrical 14 356	N/A	N/A	N/A	3,930 17,481	4,250 18,904
CFE 1 3/8 CFE 1 3/8 B CCFE 1 3/8 CCFE 1 3/8 B	CFE 1 3/8 S CFE 1 3/8 SB CCFE 1 3/8 S CCFE 1 3/8 SB	1.375 34.93	+0/-.001 +0/-.03	.750 19.05	+0 / -.005 +0 / -.13	.500 12.70	+.001/-0 +.03/-0	1.25 31.8	.031 .8	.63 15.9	2.03 51.6	Cylindrical 14 356	.030 .76	.625 15.88	.687 17.45		
CFH 1 3/8 CFH 1 3/8 B CCFH 1 3/8 CCFH 1 3/8 B	CFH 1 3/8 S CFH 1 3/8 SB CCFH 1 3/8 S CCFH 1 3/8 SB	1.375 34.93	+0/-.001 +0/-.03	.750 19.05	+0 / -.005 +0 / -.13	.750 19.05	+.001/-0 +.03/-0	1.25 31.8	.031 .8	.63 15.9	2.03 51.6	Cylindrical 14 356	N/A	N/A	N/A	3,930 17,481	8,500 37,808

Metric dimensions for reference only.
Hex wrench size for "Broached" version is located in the wrench size chart on page B-156.

Not all parts are available from stock. Please contact customer service for availability (800) 626-2120.
For more information on bearing capabilities outside of our standard offering, please contact Application Engineering (800) 626-2093.

Inch Cam Follower Bearings

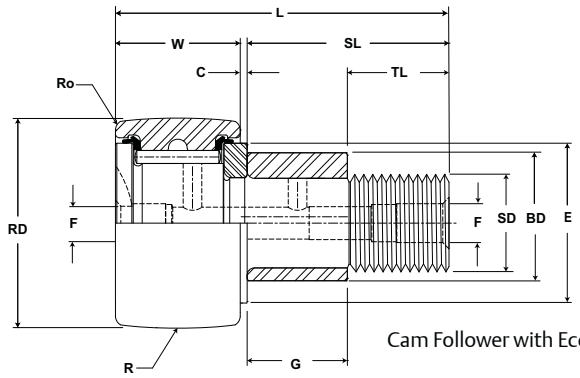

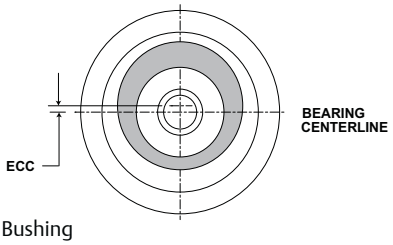

Cam Follower with Eccentric Bushing

CF, CFE, CFH

Part No.		HC	HD	F	E	Ro	HBD		Thread Type	Clamping Torque	Limiting Speed (Grease)	WT
W/O Seals	With LUBRI-DISC Seals	Hole Center	Radial Hole Diameter	Axial Hole Dia or Fitting	Min Boss Diameter	Outer Corner	Housing Bore Diameter					Bearing Weight
		inch mm			inch mm		inch mm			in-lb Nm	RPM	lb kg
		(Ref)	(Ref)	(Ref)	(Ref)	(Ref)	Nom.	Tol.				
CF 1 1/4	CF 1 1/4 S	.3125 8	.0938 2	.1875 5	.984 25.00	.031 .79	.5003 12.708	+.0002/-.0003 +.0005/-.0008	1/2-20	350 40	3,100	.30 .14
CF 1 1/4 B	CF 1 1/4 SB											
CCF 1 1/4	CCF 1 1/4 S					N/A						
CCF 1 1/4 B	CCF 1 1/4 SB											
CFE 1 1/4	CFE 1 1/4 S	.3125 8	.0938 2	.1875 5		.031 .79	.690 17.52	+.001/-.001 +.025/-.025				
CFE 1 1/4 B	CFE 1 1/4 SB											
CCFE 1 1/4	CCFE 1 1/4 S					N/A						
CCFE 1 1/4 B	CCFE 1 1/4 SB											
CFH 1 1/4	CFH 1 1/4 S	.3125 8	.0938 2	.1875 5	.984 25.00	.031 .79	.7503 19.058	+.0002/-.0003 +.0005/-.0008	3/4-16	1,250 141	3,100	.38 .17
CFH 1 1/4 B	CFH 1 1/4 SB											
CCFH 1 1/4	CCFH 1 1/4 S					N/A						
CCFH 1 1/4 B	CCFH 1 1/4 SB											
CF 1 3/8	CF 1 3/8 S	.3125 8	.0938 2	.1875 5	.984 25.00	.047 1.19	.5003 12.708	+.0002/-.0003 +.0005/-.0008	1/2-20	350 40	2,800	.35 .16
CF 1 3/8 B	CF 1 3/8 SB											
CCF 1 3/8	CCF 1 3/8 S					N/A						
CCF 1 3/8 B	CCF 1 3/8 SB											
CFE 1 3/8	CFE 1 3/8 S	.3125 8	.0938 2	.1875 5		.047 1.19	.690 17.52	+.001/-.001 +.025/-.025				
CFE 1 3/8 B	CFE 1 3/8 SB											
CCFE 1 3/8	CCFE 1 3/8 S					N/A						
CCFE 1 3/8 B	CCFE 1 3/8 SB											
CFH 1 3/8	CFH 1 3/8 S	.3125 8	.0938 2	.1875 5	.984 25.00	.047 1.19	.7503 19.058	+.0002/-.0003 +.0005/-.0008	3/4-16	1,250 141	2,800	.44 .19
CFH 1 3/8 B	CFH 1 3/8 SB											
CCFH 1 3/8	CCFH 1 3/8 S					N/A						
CCFH 1 3/8 B	CCFH 1 3/8 SB											

For positive clamping, use housing thickness equal to G dimension =.010".
Clamping torque is based on dry threads. If threads are lubricated, use half of value shown.
Hex wrench size for "Broached" version is located in the wrench size chart on page B-156.

McGILL® Inch Cam Follower Bearings

Basic Construction Type: Stud Type Crowned / Cylindrical Outside Diameter

Rolling Elements: Full Complement Needle Roller

Bearing Material: Bearing Quality Steel

Seal Type: LUBRI-DISC®

Lubrication: Lithium Soap Grease NLGI #2

System Configuration: Concentric / Eccentric / Heavy Stud

Mounting Feature: Slot / Hex Hole

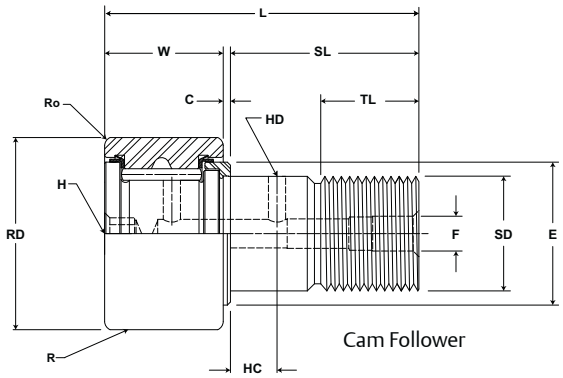

Cam Follower

CF, CFE, CFH

Part No.		RD		W		SD		SL	C	TL	L	R	ECC	G	BD	Track Roller Dynamic Rating	Track Roller Static Rating
W/O Seals	With LUBRI-DISC Seals	Roller Diameter		Roller Width		Stud Diameter		Stud Length	Endplate Extension	Min Thread Length	Length Overall	Crown Prefix CCF-XX	Eccentric Base Modifier CFE-XX				
		inch mm		inch mm		inch mm		inch mm		inch mm		inch mm	inch mm			lb/N	
		Nom.	Tol.	Nom.	Tol.	Nom.	Tol.	(Ref)	(Ref)	(Ref)	(Ref)	Radius (Ref)	(Ref)	+0/-.010	±.001		
CF 1 1/2 CF 1 1/2 B CCF 1 1/2 CCF 1 1/2 B	CF 1 1/2 S CF 1 1/2 SB CCF 1 1/2 S CCF 1 1/2 SB	1.500 38.10	+0/-.001 +0/-.03	.875 22.23	+0 / -.005 +0 / -.13	.625 15.88	+.001/-0 +.03/-0	1.50 38.1	.031 .8	.75 19.1	2.41 61.1	Cylindrical 20 508	N/A	N/A	N/A	4,840 21,528	5,640 25,087
CFE 1 1/2 CFE 1 1/2 B CCFE 1 1/2 CCFE 1 1/2 B	CFE 1 1/2 S CFE 1 1/2 SB CCFE 1 1/2 S CCFE 1 1/2 SB	1.500 38.10	+0/-.001 +0/-.03	.875 22.23	+0 / -.005 +0 / -.13	.625 15.88	+.001/-0 +.03/-0	1.50 38.1	.031 .8	.75 19.1	2.41 61.1	Cylindrical 20 508	.030 .76	.750 19.05	875 22.23		
CFH 1 1/2 CFH 1 1/2 B CCFH 1 1/2 CCFH 1 1/2 B	CFH 1 1/2 S CFH 1 1/2 SB CCFH 1 1/2 S CCFH 1 1/2 SB	1.500 38.10	+0/-.001 +0/-.03	.875 22.23	+0 / -.005 +0 / -.13	.875 22.23	+.001/-0 +.03/-0	1.50 38.1	.031 .8	.75 19.1	2.41 61.1	Cylindrical 20 508	N/A	N/A	N/A	4,840 21,528	11,280 50,173
CF 1 5/8 CF 1 5/8 B CCF 1 5/8 CCF 1 5/8 B	CF 1 5/8 S CF 1 5/8 SB CCF 1 5/8 S CCF 1 5/8 SB	1.625 41.28	+0/-.001 +0/-.03	.875 22.23	+0 / -.005 +0 / -.13	.625 15.88	+.001/-0 +.03/-0	1.50 38.1	.031 .8	.75 19.1	2.41 61.1	Cylindrical 20 508	N/A	N/A	N/A	4,840 21,528	5,640 25,087
CFE 1 5/8 CFE 1 5/8 B CCFE 1 5/8 CCFE 1 5/8 B	CFE 1 5/8 S CFE 1 5/8 SB CCFE 1 5/8 S CCFE 1 5/8 SB	1.625 41.28	+0/-.001 +0/-.03	.875 22.23	+0 / -.005 +0 / -.13	.625 15.88	+.001/-0 +.03/-0	1.50 38.1	.031 .8	.75 19.1	2.41 61.1	Cylindrical 20 508	.030 .76	.750 19.05	.875 22.23		
CFH 1 5/8 CFH 1 5/8 B CCFH 1 5/8 CCFH 1 5/8 B	CFH 1 5/8 S CFH 1 5/8 SB CCFH 1 5/8 S CCFH 1 5/8 SB	1.625 41.28	+0/-.001 +0/-.03	.875 22.23	+0 / -.005 +0 / -.13	.875 22.23	+.001/-0 +.03/-0	1.50 38.1	.031 .8	.75 19.1	2.41 61.1	Cylindrical 20 508	N/A	N/A	N/A	4,840 21,528	11,280 50,173

Metric dimensions for reference only.
Hex wrench size for "Broached" version is located in the wrench size chart on page B-156.

Not all parts are available from stock. Please contact customer service for availability (800) 626-2120.
For more information on bearing capabilities outside of our standard offering, please contact Application Engineering (800) 626-2093.

Inch Cam Follower Bearings

McGILL®

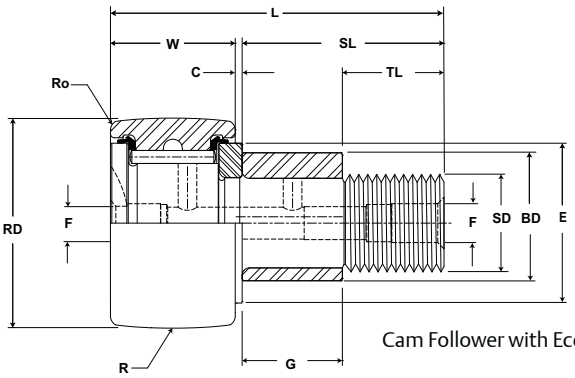

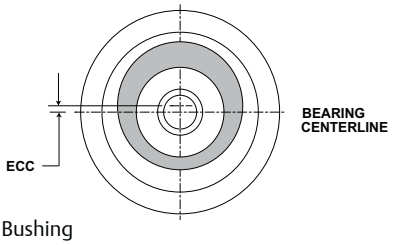

Cam Follower with Eccentric Bushing

CF, CFE, CFH

Part No.		HC	HD	F	E	Ro	HBD		Thread Type	Clamping Torque	Limiting Speed (Grease)	WT
W/O Seals	With LUBRI-DISC Seals	Hole Center	Radial Hole Diameter	Axial Hole Dia or Fitting	Min Boss Diameter	Outer Corner	Housing Bore Diameter					Bearing Weight
		inch mm			inch mm		inch mm			in-lb Nm	RPM	lb kg
		(Ref)	(Ref)	(Ref)	(Ref)	(Ref)	Nom.	Tol.				
CF 1 1/2	CF 1 1/2 S	.375 10	.0938 2	.1875 5	1.094 27.78	.063 1.59	.6253 15.883	+.0002/-.0003 +.0005/-.0008	5/8-18	650 73	2,500	.53 .24
CF 1 1/2 B	CF 1 1/2 SB											
CCF 1 1/2	CCF 1 1/2 S					N/A						
CCF 1 1/2 B	CCF 1 1/2 SB											
CFE 1 1/2	CFE 1 1/2 S	.375 10	.0938 2	.1875 5		.063 1.59	.878 22.30	+.001/-.001 +.025/-.025				
CFE 1 1/2 B	CFE 1 1/2 SB											
CCFE 1 1/2	CCFE 1 1/2 S					N/A						
CCFE 1 1/2 B	CCFE 1 1/2 SB											
CFH 1 1/2	CFH 1 1/2 S	.375 10	.0938 2	.1875 5	1.094 27.78	.063 1.59	.8753 22.233	+.0002/-.0003 +.0005/-.0008	7/8-14	1,500 170	2,500	.69 .31
CFH 1 1/2 B	CFH 1 1/2 SB											
CCFH 1 1/2	CCFH 1 1/2 S					N/A						
CCFH 1 1/2 B	CCFH 1 1/2 SB											
CF 1 5/8	CF 1 5/8 S	.375 10	.0938 2	.1875 5	1.094 27.78	.063 1.59	.6253 15.883	+.0002/-.0003 +.0005/-.0008	5/8-18	650 73	2,350	.60 .27
CF 1 5/8 B	CF 1 5/8 SB											
CCF 1 5/8	CCF 1 5/8 S					N/A						
CCF 1 5/8 B	CCF 1 5/8 SB											
CFE 1 5/8	CFE 1 5/8 S	.375 10	.0938 2	.1875 5		.063 1.59	.878 22.30	+.001/-.001 +.025/-.025				
CFE 1 5/8 B	CFE 1 5/8 SB											
CCFE 1 5/8	CCFE 1 5/8 S					N/A						
CCFE 1 5/8 B	CCFE 1 5/8 SB											
CFH 1 5/8	CFH 1 5/8 S	.375 10	.0938 2	.1875 5	1.094 27.78	.063 1.59	.8753 22.233	+.0002/-.0003 +.0005/-.0008	7/8-14	1,500 170	2,350	.75 .34
CFH 1 5/8 B	CFH 1 5/8 SB											
CCFH 1 5/8	CCFH 1 5/8 S					N/A						
CCFH 1 5/8 B	CCFH 1 5/8 SB											

For positive clamping, use housing thickness equal to G dimension =.010".
Clamping torque is based on dry threads. If threads are lubricated, use half of value shown.
Hex wrench size for "Broached" version is located in the wrench size chart on page B-156.

McGILL® Inch Cam Follower Bearings

Basic Construction Type: Stud Type Crowned / Cylindrical Outside Diameter

Rolling Elements: Full Complement Needle Roller

Bearing Material: Bearing Quality Steel

Seal Type: LUBRI-DISC®

Lubrication: Lithium Soap Grease NLGI #2

System Configuration: Concentric / Eccentric / Heavy Stud

Mounting Feature: Slot / Hex Hole

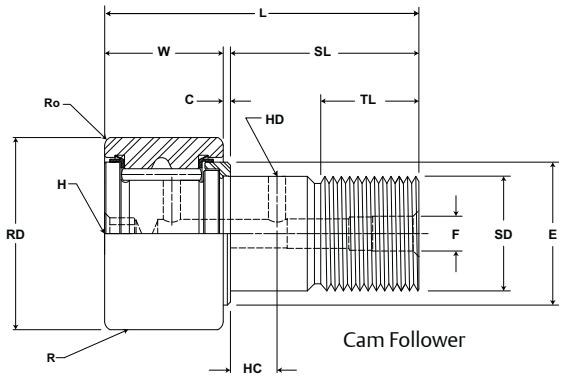

Cam Follower

CF, CFE, CFH

Part No.		RD		W		SD		SL	C	TL	L	R	ECC	G	BD	Track Roller Dynamic Rating	Track Roller Static Rating
W/O Seals	With LUBRI-DISC Seals	Roller Diameter		Roller Width		Stud Diameter		Stud Length	Endplate Extension	Min Thread Length	Length Overall	Crown Prefix CCF-XX	Eccentric Base Modifier CFE-XX				
		inch mm		inch mm		inch mm		inch mm		inch mm		inch mm	inch mm			lb/N	
		Nom.	Tol.	Nom.	Tol.	Nom.	Tol.	(Ref)	(Ref)	(Ref)	(Ref)	Radius (Ref)	(Ref)	+0/-.010	±.001		
CF 1 3/4 CF 1 3/4 B CCF 1 3/4 CCF 1 3/4 B	CF 1 3/4 S CF 1 3/4 SB CCF 1 3/4 S CCF 1 3/4 SB	1.750 44.45	+0/-.001 +0/-.03	1.000 25.40	+0 / -.005 +0 / -.13	.750 19.05	+.001/-0 +.03/-0	1.75 44.5	.031 .8	.88 22.2	2.78 70.6	Cylindrical 20 508	N/A	N/A	N/A	6,385 28,400	7,920 35,228
CFE 1 3/4 CFE 1 3/4 B CCFE 1 3/4 CCFE 1 3/4 B	CFE 1 3/4 S CFE 1 3/4 SB CCFE 1 3/4 S CCFE 1 3/4 SB	1.750 44.45	+0/-.001 +0/-.03	1.000 25.40	+0 / -.005 +0 / -.13	.750 19.05	+.001/-0 +.03/-0	1.75 44.5	.031 .8	.88 22.2	2.78 70.6	Cylindrical 20 508	.030 .76	.875 22.23	1.000 25.40		
CFH 1 3/4 CFH 1 3/4 B CCFH 1 3/4 CCFH 1 3/4 B	CFH 1 3/4 S CFH 1 3/4 SB CCFH 1 3/4 S CCFH 1 3/4 SB	1.750 44.45	+0/-.001 +0/-.03	1.000 25.40	+0 / -.005 +0 / -.13	1.000 25.40	+.001/-0 +.03/-0	1.75 44.5	.031 .8	.88 22.2	2.78 70.6	Cylindrical 20 508	N/A	N/A	N/A	6,385 28,400	15,840 70,456
CF 1 7/8 CF 1 7/8 B CCF 1 7/8 CCF 1 7/8 B	CF 1 7/8 S CF 1 7/8 SB CCF 1 7/8 S CCF 1 7/8 SB	1.875 47.63	+0/-.001 +0/-.03	1.000 25.40	+0 / -.005 +0 / -.13	.750 19.05	+.001/-0 +.03/-0	1.75 44.5	.031 .8	.88 22.2	2.78 70.6	Cylindrical 20 508	N/A	N/A	N/A	6,385 28,400	7,920 35,228
CFE 1 7/8 CFE 1 7/8 B CCFE 1 7/8 CCFE 1 7/8 B	CFE 1 7/8 S CFE 1 7/8 SB CCFE 1 7/8 S CCFE 1 7/8 SB	1.875 47.63	+0/-.001 +0/-.03	1.000 25.40	+0 / -.005 +0 / -.13	.750 19.05	+.001/-0 +.03/-0	1.75 44.5	.031 .8	.88 22.2	2.78 70.6	Cylindrical 20 508	.030 .76	.875 22.24	1.000 25.40		
CFH 1 7/8 CFH 1 7/8 B CCFH 1 7/8 CCFH 1 7/8 B	CFH 1 7/8 S CFH 1 7/8 SB CCFH 1 7/8 S CCFH 1 7/8 SB	1.875 47.63	+0/-.001 +0/-.03	1.000 25.40	+0 / -.005 +0 / -.13	1.000 25.40	+.001/-0 +.03/-0	1.75 44.5	.031 .8	.88 22.2	2.78 70.6	Cylindrical 20 508	N/A	N/A	N/A	6,385 28,400	15,840 70,456

Metric dimensions for reference only.
Hex wrench size for "Broached" version is located in the wrench size chart on page B-156.

Not all parts are available from stock. Please contact customer service for availability (800) 626-2120.
For more information on bearing capabilities outside of our standard offering, please contact Application Engineering (800) 626-2093.

Inch Cam Follower Bearings

McGILL®

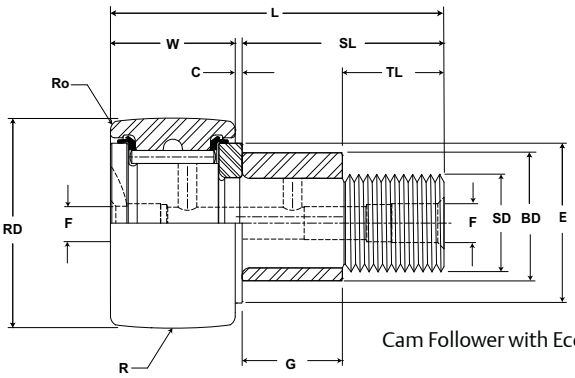

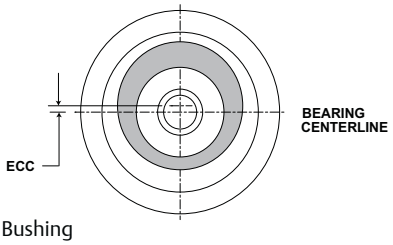

Cam Follower with Eccentric Bushing

CF, CFE, CFH

Part No.		HC	HD	F	E	Ro	HBD		Thread Type	Clamping Torque	Limiting Speed (Grease)	WT
W/O Seals	With LUBRI-DISC Seals	Hole Center	Radial Hole Diameter	Axial Hole Dia or Fitting	Min Boss Diameter	Outer Corner	Housing Bore Diameter					Bearing Weight
		inch mm			inch mm		inch mm			in-lb Nm	RPM	lb kg
		(Ref)	(Ref)	(Ref)	(Ref)	(Ref)	Nom.	Tol.				
CF 1 3/4 CF 1 3/4 B CCF 1 3/4 CCF 1 3/4 B	CF 1 3/4 S CF 1 3/4 SB CCF 1 3/4 S CCF 1 3/4 SB	.4375 11	.125 3	.1875 5	1.250 31.75	.063 1.59	.7503 19.058	+.0002/-.0003 +.0005/-.0008	3/4-16	1,250 141	2,200	.84 .38
						N/A						
CFE 1 3/4 CFE 1 3/4 B CCFE 1 3/4 CCFE 1 3/4 B	CFE 1 3/4 S CFE 1 3/4 SB CCFE 1 3/4 S CCFE 1 3/4 SB	.4375 11	.125 3	.1875 5		.063 1.59	1.003 25.47	+.001/-.001 +.025/-.025				
						N/A						
CFH 1 3/4 CFH 1 3/4 B CCFH 1 3/4 CCFH 1 3/4 B	CFH 1 3/4 S CFH 1 3/4 SB CCFH 1 3/4 S CCFH 1 3/4 SB	.4375 11	.125 3	.1875 5	1.250 31.75	.063 1.59	1.0003 25.408	+.0002/-.0003 +.0005/-.0008	1-14	2,250 254	2,200	1.00 .45
						N/A						
CF 1 7/8 CF 1 7/8 B CCF 1 7/8 CCF 1 7/8 B	CF 1 7/8 S CF 1 7/8 SB CCF 1 7/8 S CCF 1 7/8 SB	.4375 11	.125 3	.1875 5	1.250 31.75	.063 1.59	.7503 19.058	+.0002/-.0003 +.0005/-.0008	3/4-16	1,250 141	2,000	.95 .43
						N/A						
CFE 1 7/8 CFE 1 7/8 B CCFE 1 7/8 CCFE 1 7/8 B	CFE 1 7/8 S CFE 1 7/8 SB CCFE 1 7/8 S CCFE 1 7/8 SB	.4375 11	.125 3	.1875 5		.063 1.59	1.003 25.47	+.001/-.001 +.025/-.025				
						N/A						
CFH 1 7/8 CFH 1 7/8 B CCFH 1 7/8 CCFH 1 7/8 B	CFH 1 7/8 S CFH 1 7/8 SB CCFH 1 7/8 S CCFH 1 7/8 SB	.4375 11	.125 3	.1875 5	1.250 31.75	.063 1.59	1.0003 25.408	+.0002/-.0003 +.0005/-.0008	1-14	2,250 254	2,000	1.15 .52
						N/A						

For positive clamping, use housing thickness equal to G dimension =.010".
Clamping torque is based on dry threads. If threads are lubricated, use half of value shown.
Hex wrench size for "Broached" version is located in the wrench size chart on page B-156.

McGILL® Inch Cam Follower Bearings

Basic Construction Type: Stud Type Crowned / Cylindrical Outside Diameter

Rolling Elements: Full Complement Needle Roller

Bearing Material: Bearing Quality Steel

Seal Type: LUBRI-DISC®

Lubrication: Lithium Soap Grease NLGI #2

System Configuration: Concentric / Eccentric / Heavy Stud

Mounting Feature: Slot / Hex Hole

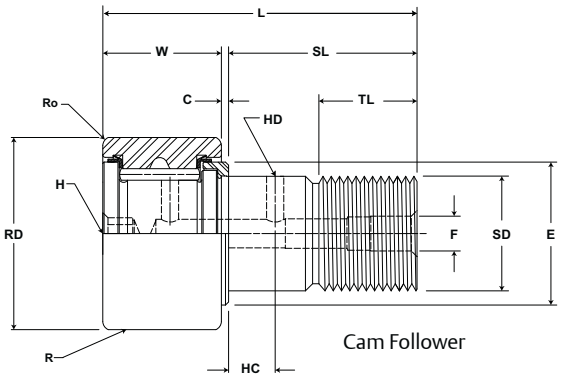

Cam Follower

CF, CFE, CFH

Part No.		RD		W		SD		SL	C	TL	L	R	ECC	G	BD	Track Roller Dynamic Rating	Track Roller Static Rating
W/O Seals	With LUBRI-DISC Seals	Roller Diameter		Roller Width		Stud Diameter		Stud Length	Endplate Extension	Min Thread Length	Length Overall	Crown Prefix CCF-XX	Eccentric Base Modifier CFE-XX				
		inch mm		inch mm		inch mm		inch mm		inch mm		inch mm	inch mm			lb/N	
		Nom.	Tol.	Nom.	Tol.	Nom.	Tol.	(Ref)	(Ref)	(Ref)	(Ref)	Radius (Ref)	(Ref)	+0/-.010	±.001		
CF 2 CF 2 B CCF 2 CCF 2 B	CF 2 S CF 2 SB CCF 2 S CCF 2 SB	2.000 50.80	+0/-.001 +0/-.03	1.250 31.75	+0 / -.005 +0 / -.13	.875 22.23	+.001/-0 +.03/-0	2.00 50.8	.031 .8	1.00 25.4	3.28 83.3	Cylindrical 24 610	N/A	N/A	N/A	8,090 35,984	10,570 47,015
CFE 2 CFE 2 B CCFE 2 CCFE 2 B	CFE 2 S CFE 2 SB CCFE 2 S CCFE 2 SB	2.000 50.80	+0/-.001 +0/-.03	1.250 31.75	+0 / -.005 +0 / -.13	.875 22.23	+.001/-0 +.03/-0	2.00 50.8	.031 .8	1.00 25.4	3.28 83.3	Cylindrical 24 610	.030 .76	1.000 25.40	1.187 30.15		
CFH 2 CFH 2 B CCFH 2 CCFH 2 B	CFH 2 S CFH 2 SB CCFH 2 S CCFH 2 SB	2.000 50.80	+0/-.001 +0/-.03	1.250 31.75	+0 / -.005 +0 / -.13	1.125 28.58	+.001/-0 +.03/-0	2.00 50.8	.031 .8	1.00 25.4	3.28 83.3	Cylindrical 24 610	N/A	N/A	N/A	8,090 35,984	21,140 94,031
CF 2 1/4 CF 2 1/4 B CCF 2 1/4 CCF 2 1/4 B	CF 2 1/4 S CF 2 1/4 SB CCF 2 1/4 S CCF 2 1/4 SB	2.250 57.15	+0/-.001 +0/-.03	1.250 31.75	+0 / -.005 +0 / -.13	.875 22.23	+.001/-0 +.03/-0	2.00 50.8	.031 .8	1.00 25.4	3.28 83.3	Cylindrical 24 610	N/A	N/A	N/A	8,090 35,984	10,570 47,015
CFE 2 1/4 CFE 2 1/4 B CCFE 2 1/4 CCFE 2 1/4 B	CFE 2 1/4 S CFE 2 1/4 SB CCFE 2 1/4 S CCFE 2 1/4 SB	2.250 57.15	+0/-.001 +0/-.03	1.250 31.75	+0 / -.005 +0 / -.13	.875 22.23	+.001/-0 +.03/-0	2.00 50.8	.031 .8	1.00 25.4	3.28 83.3	Cylindrical 24 610	.030 .76	1.000 25.40	1.187 30.15		
CFH 2 1/4 CFH 2 1/4 B CCFH 2 1/4 CCFH 2 1/4 B	CFH 2 1/4 S CFH 2 1/4 SB CCFH 2 1/4 S CCFH 2 1/4 SB	2.250 57.15	+0/-.001 +0/-.03	1.250 31.75	+0 / -.005 +0 / -.13	1.125 28.58	+.001/-0 +.03/-0	2.00 50.8	.031 .8	1.00 25.4	3.28 83.3	Cylindrical 24 610	N/A	N/A	N/A	8,090 35,984	21,140 94,031

Metric dimensions for reference only.
Hex wrench size for "Broached" version is located in the wrench size chart on page B-156.

Not all parts are available from stock. Please contact customer service for availability (800) 626-2120.
For more information on bearing capabilities outside of our standard offering, please contact Application Engineering (800) 626-2093.

Inch Cam Follower Bearings

McGILL®

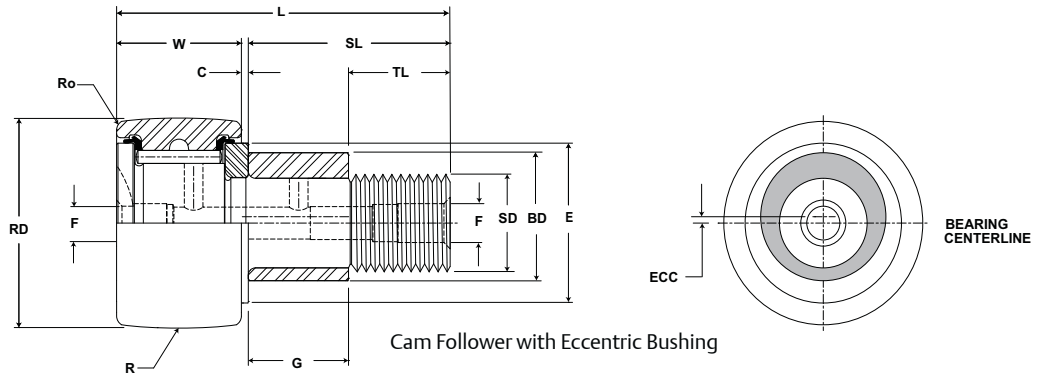

Cam Follower with Eccentric Bushing

CF, CFE, CFH

Part No. W/O Seals	Part No. With LUBRI-DISC Seals	HC Hole Center inch mm (Ref)	HD Radial Hole Diameter inch mm (Ref)	F Axial Hole Dia or Fitting inch mm (Ref)	E Min Boss Diameter inch mm (Ref)	Ro Outer Corner inch mm (Ref)	HBD Housing Bore Diameter inch mm Nom.	HBD Housing Bore Diameter inch mm Tol.	Thread Type	Clamping Torque in-lb Nm	Limiting Speed (Grease) RPM	WT Bearing Weight lb kg
CF 2	CF 2 S	.50 13	.125 3	.1875 5	1.406 35.72	.094 2.38	.8753 22.233	+.0002/-.0003 +.0005/-.0008	7/8-14	1,500 170	1,400	1.36 .62
CF 2 B	CF 2 SB											
CCF 2	CCF 2 S					N/A						
CCF 2 B	CCF 2 SB											
CFE 2	CFE 2 S	.50 13	.125 3	.1875 5		.094 2.38	1.190 30.22	+.001/-.001 +.025/-.025				
CFE 2 B	CFE 2 SB											
CCFE 2	CCFE 2 S					N/A						
CCFE 2 B	CCFE 2 SB											
CFH 2	CFH 2 S	.50 13	.125 3	.1875 5	1.406 35.72	.094 2.38	1.1253 28.583	+.0002/-.0003 +.0005/-.0008	1 1/8-12	2,800 316	1,400	1.56 .71
CFH 2 B	CFH 2 SB											
CCFH 2	CCFH 2 S					N/A						
CCFH 2 B	CCFH 2 SB											
CF 2 1/4	CF 2 1/4 S	.50 13	.125 3	.1875 5	1.406 35.72	.094 2.38	.8753 22.233	+.0002/-.0003 +.0005/-.0008	7/8-14	1,500 170	1,300	1.65 .75
CF 2 1/4 B	CF 2 1/4 SB											
CCF 2 1/4	CCF 2 1/4 S					N/A						
CCF 2 1/4 B	CCF 2 1/4 SB											
CFE 2 1/4	CFE 2 1/4 S	.50 13	.125 3	.1875 5		.094 2.38	1.190 30.22	+.001/-.001 +.025/-.025				
CFE 2 1/4 B	CFE 2 1/4 SB											
CCFE 2 1/4	CCFE 2 1/4 S					N/A						
CCFE 2 1/4 B	CCFE 2 1/4 SB											
CFH 2 1/4	CFH 2 1/4 S	.50 13	.125 3	.1875 5	1.406 35.72	.094 2.38	1.1253 28.583	+.0002/-.0003 +.0005/-.0008	1 1/8-12	2,800 316	1,300	1.88 .85
CFH 2 1/4 B	CFH 2 1/4 SB											
CCFH 2 1/4	CCFH 2 1/4 S					N/A						
CCFH 2 1/4 B	CCFH 2 1/4 SB											

For positive clamping, use housing thickness equal to G dimension =.010".
Clamping torque is based on dry threads. If threads are lubricated, use half of value shown.
Hex wrench size for "Broached" version is located in the wrench size chart on page B-156.

McGILL® Inch Cam Follower Bearings

Basic Construction Type: Stud Type Crowned / Cylindrical Outside Diameter

Rolling Elements: Full Complement Needle Roller

Bearing Material: Bearing Quality Steel

Seal Type: LUBRI-DISC®

Lubrication: Lithium Soap Grease NLGI #2

System Configuration: Concentric / Eccentric / Heavy Stud

Mounting Feature: Slot / Hex Hole

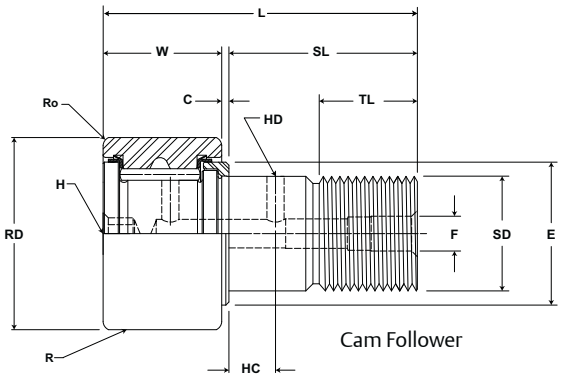

Cam Follower

CF, CFE, CFH

Part No.		RD		W		SD		SL	C	TL	L	R	ECC	G	BD	Track Roller Dynamic Rating	Track Roller Static Rating
W/O Seals	With LUBRI-DISC Seals	Roller Diameter		Roller Width		Stud Diameter		Stud Length	Endplate Extension	Min Thread Length	Length Overall	Crown Prefix CCF-XX	Eccentric Base Modifier CFE-XX				
		inch mm		inch mm		inch mm		inch mm		inch mm		inch mm	inch mm			lb/N	
		Nom.	Tol.	Nom.	Tol.	Nom.	Tol.	(Ref)	(Ref)	(Ref)	(Ref)	Radius (Ref)	(Ref)	+0/-.010	±.001		
CF 2 1/2 CF 2 1/2 B CCF 2 1/2 CCF 2 1/2 B	CF 2 1/2 S CF 2 1/2 SB CCF 2 1/2 S CCF 2 1/2 SB	2.500 63.50	+0/-.001 +0/-.03	1.500 38.10	+0 / -.005 +0 / -.13	1.000 25.40	+.001/-0 +.03/-0	2.25 57.2	.031 .8	1.125 28.57	3.78 96.0	Cylindrical 30 762	N/A	N/A	N/A	11,720 52,131	16,450 73,170
CFE 2 1/2 CFE 2 1/2 B CCFE 2 1/2 CCFE 2 1/2 B	CFE 2 1/2 S CFE 2 1/2 SB CCFE 2 1/2 S CCFE 2 1/2 SB	2.500 63.50	+0/-.001 +0/-.03	1.500 38.10	+0 / -.005 +0 / -.13	1.000 25.40	+.001/-0 +.03/-0	2.25 57.2	.031 .8	1.125 28.57	3.78 96.0	Cylindrical 30 762	.030 .76	1.125 28.58	1.375 34.93		
CFH 2 1/2 CFH 2 1/2 B CCFH 2 1/2 CCFH 2 1/2 B	CFH 2 1/2 S CFH 2 1/2 SB CCFH 2 1/2 S CCFH 2 1/2 SB	2.500 63.50	+0/-.001 +0/-.03	1.500 38.10	+0 / -.005 +0 / -.13	1.250 31.75	+.001/-0 +.03/-0	2.25 57.2	.031 .8	1.125 28.57	3.78 96.0	Cylindrical 30 762	N/A	N/A	N/A	11,720 52,131	32,900 146,339
CF 2 3/4 CF 2 3/4 B CCF 2 3/4 CCF 2 3/4 B	CF 2 3/4 S CF 2 3/4 SB CCF 2 3/4 S CCF 2 3/4 SB	2.750 69.85	+0/-.001 +0/-.03	1.500 38.10	+0 / -.005 +0 / -.13	1.000 25.40	+.001/-0 +.03/-0	2.25 57.2	.031 .8	1.125 28.57	3.78 96.0	Cylindrical 30 762	N/A	N/A	N/A	11,720 52,131	16,450 73,170
CFE 2 3/4 CFE 2 3/4 B CCFE 2 3/4 CCFE 2 3/4 B	CFE 2 3/4 S CFE 2 3/4 SB CCFE 2 3/4 S CCFE 2 3/4 SB	2.750 69.85	+0/-.001 +0/-.03	1.500 38.10	+0 / -.005 +0 / -.13	1.000 25.40	+.001/-0 +.03/-0	2.25 57.2	.031 .8	1.125 28.57	3.78 96.0	Cylindrical 30 762	.030 .76	1.125 28.58	1.375 34.93		
CFH 2 3/4 CFH 2 3/4 B CCFH 2 3/4 CCFH 2 3/4 B	CFH 2 3/4 S CFH 2 3/4 SB CCFH 2 3/4 S CCFH 2 3/4 SB	2.750 69.85	+0/-.001 +0/-.03	1.500 38.10	+0 / -.005 +0 / -.13	1.250 31.75	+.001/-0 +.03/-0	2.25 57.2	.031 .8	1.125 28.57	3.78 96.0	Cylindrical 30 762	N/A	N/A	N/A	11,720 52,131	32,900 146,339

Metric dimensions for reference only.
Hex wrench size for "Broached" version is located in the wrench size chart on page B-156.

Not all parts are available from stock. Please contact customer service for availability (800) 626-2120.
For more information on bearing capabilities outside of our standard offering, please contact Application Engineering (800) 626-2093.

Inch Cam Follower Bearings

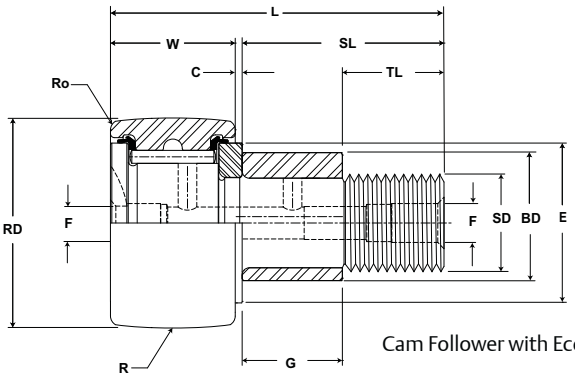

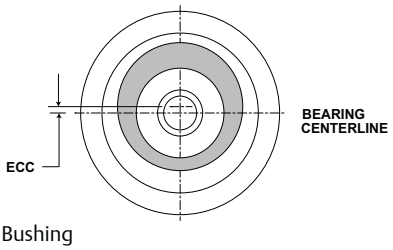

Cam Follower with Eccentric Bushing

CF, CFE, CFH

Part No.		HC	HD	F	E	Ro	HBD		Thread Type	Clamping Torque	Limiting Speed (Grease)	WT
W/O Seals	With LUBRI-DISC Seals	Hole Center	Radial Hole Diameter	Axial Hole Dia or Fitting	Min Boss Diameter	Outer Corner	Housing Bore Diameter					Bearing Weight
		inch mm			inch mm		inch mm			in-lb Nm	RPM	lb kg
		(Ref)	(Ref)	(Ref)	(Ref)	(Ref)	Nom.	Tol.				
CF 2 1/2 CF 2 1/2 B CCF 2 1/2 CCF 2 1/2 B	CF 2 1/2 S CF 2 1/2 SB CCF 2 1/2 S CCF 2 1/2 SB	.5625 14	.125 3	.1875 5	1.688 42.86	.094 2.38 N/A	1.0003 25.408	+.0002/-.0003 +.0005/-.0008	1-14	2,250 254	1,100	2.50 1.13
CFE 2 1/2 CFE 2 1/2 B CCFE 2 1/2 CCFE 2 1/2 B	CFE 2 1/2 S CFE 2 1/2 SB CCFE 2 1/2 S CCFE 2 1/2 SB	.5625 14	.125 3	.1875 5		.094 2.38 N/A	1.378 35.00	+.001/-.001 +.025/-.025				
CFH 2 1/2 CFH 2 1/2 B CCFH 2 1/2 CCFH 2 1/2 B	CFH 2 1/2 S CFH 2 1/2 SB CCFH 2 1/2 S CCFH 2 1/2 SB	.5625 14	.125 3	.1875 5	1.688 42.86	.094 2.38 N/A	1.2503 31.758	+.0002/-.0003 +.0005/-.0008	1 1/4-12	3,450 390	1,100	2.75 1.25
CF 2 3/4 CF 2 3/4 B CCF 2 3/4 CCF 2 3/4 B	CF 2 3/4 S CF 2 3/4 SB CCF 2 3/4 S CCF 2 3/4 SB	.5625 14	.125 3	.1875 5	1.688 42.86	.094 2.38 N/A	1.0003 25.408	+.0002/-.0003 +.0005/-.0008	1-14	2,250 254	1,050	2.93 1.33
CFE 2 3/4 CFE 2 3/4 B CCFE 2 3/4 CCFE 2 3/4 B	CFE 2 3/4 S CFE 2 3/4 SB CCFE 2 3/4 S CCFE 2 3/4 SB	.5625 14	.125 3	.1875 5		.094 2.38 N/A	1.378 35.00	+.001/-.001 +.025/-.025				
CFH 2 3/4 CFH 2 3/4 B CCFH 2 3/4 CCFH 2 3/4 B	CFH 2 3/4 S CFH 2 3/4 SB CCFH 2 3/4 S CCFH 2 3/4 SB	.5625 14	.125 3	.1875 5	1.688 42.86	.094 2.38 N/A	1.2503 31.758	+.0002/-.0003 +.0005/-.0008	1 1/4-12	3,450 390	1,050	3.19 1.47

For positive clamping, use housing thickness equal to G dimension =.010".
Clamping torque is based on dry threads. If threads are lubricated, use half of value shown.
Hex wrench size for "Broached" version is located in the wrench size chart on page B-156.

McGILL® Inch Cam Follower Bearings

Basic Construction Type: Stud Type Crowned / Cylindrical Outside Diameter

Rolling Elements: Full Complement Needle Roller

Bearing Material: Bearing Quality Steel

Seal Type: LUBRI-DISC®

Lubrication: Lithium Soap Grease NLGI #2

System Configuration: Concentric / Eccentric / Heavy Stud

Mounting Feature: Slot / Hex Hole

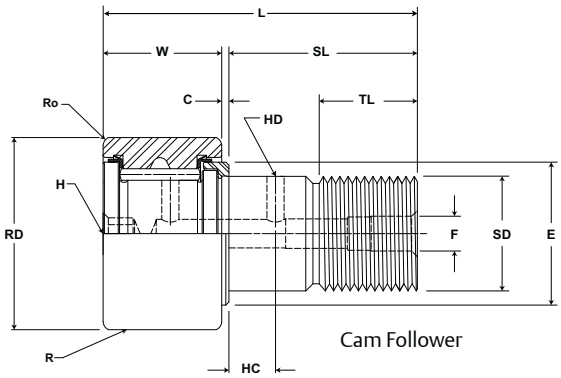

Cam Follower

CF, CFE, CFH

Part No. W/O Seals	Part No. With LUBRI-DISC Seals	RD Roller Diameter inch mm Nom.	RD Roller Diameter inch mm Tol.	W Roller Width inch mm Nom.	W Roller Width inch mm Tol.	SD Stud Diameter inch mm Nom.	SD Stud Diameter inch mm Tol.	SL Stud Length inch mm (Ref)	C Endplate Extension inch mm (Ref)	TL Min Thread Length inch mm (Ref)	L Length Overall inch mm (Ref)	R Crown Prefix CCF-XX inch mm Radius (Ref)	ECC Eccentric Base Modifier CFE-XX inch mm (Ref)	G Eccentric Base Modifier CFE-XX inch mm +0/-.010	BD Eccentric Base Modifier CFE-XX inch mm ±.001	Track Roller Dynamic Rating lb/N	Track Roller Static Rating lb/N
CF 3	CF 3 S	3.000	+0/-.001	1.750	+0 / -.005	1.250	+.001/-0	2.50	.031	1.25	4.28	Cylindrical	N/A	N/A	N/A	15,720	24,910
CF 3 B	CF 3 SB	76.20	+0/-.03	44.45	+0 / -.13	31.75	+.03/-0	63.5	.8	31.75	108.7	30				69,923	110,800
CCF 3	CCF 3 S											762					24,910
CCF 3 B	CCF 3 SB																110,800
CFE 3	CFE 3 S	3.000	+0/-.001	1.750	+0 / -.005	1.250	+.001/-0	2.50	.031	1.25	4.28	Cylindrical	.060	1.250	1.750		
CFE 3 B	CFE 3 SB	76.20	+0/-.03	44.45	+0 / -.13	31.75	+.03/-0	63.5	.8	31.75	108.7	30	.52	31.75	44.45		
CCFE 3	CCFE 3 S											762					
CCFE 3 B	CCFE 3 SB																
CFH 3	CFH 3 S	3.000	+0/-.001	1.750	+0 / -.005	1.500	+.001/-0	2.50	.031	1.25	4.28	Cylindrical	N/A	N/A	N/A	15,720	49,820
CFH 3 B	CFH 3 SB	76.20	+0/-.03	44.45	+0 / -.13	38.10	+.03/-0	63.5	.8	31.75	108.7	30				69,923	221,599
CCFH 3	CCFH 3 S											762					
CCFH 3 B	CCFH 3 SB																
CF 3 1/4	CF 3 1/4 S	3.250	+0/-.001	1.750	+0 / -.005	1.250	+.001/-0	2.50	.031	1.25	4.28	Cylindrical	N/A	N/A	N/A	15,720	24,910
CF 3 1/4 B	CF 3 1/4 SB	82.55	+0/-.03	44.45	+0 / -.13	31.75	+.03/-0	63.5	.8	31.75	108.7	30				69,923	110,800
CCF 3 1/4	CCF 3 1/4 S											762					
CCF 3 1/4 B	CCF 3 1/4 SB																
CFE 3 1/4	CFE 3 1/4 S	3.250	+0/-.001	1.750	+0 / -.005	1.250	+.001/-0	2.50	.031	1.25	4.28	Cylindrical	.060	1.250	1.750		
CFE 3 1/4 B	CFE 3 1/4 SB	82.55	+0/-.03	44.45	+0 / -.13	31.75	+.03/-0	63.5	.8	31.75	108.7	30	.52	31.75	44.45		
CCFE 3 1/4	CCFE 3 1/4 S											762					
CCFE 3 1/4 B	CCFE 3 1/4 SB																
CFH 3 1/4	CFH 3 1/4 S	3.250	+0/-.001	1.750	+0 / -.005	1.500	+.001/-0	2.50	.031	1.25	4.28	Cylindrical	N/A	N/A	N/A	15,720	49,820
CFH 3 1/4 B	CFH 3 1/4 SB	82.55	+0/-.03	44.45	+0 / -.13	38.10	+.03/-0	63.5	.8	31.75	108.7	30				69,923	221,599
CCFH 3 1/4	CCFH 3 1/4 S											762					
CCFH 3 1/4 B	CCFH 3 1/4 SB																

Metric dimensions for reference only.
Hex wrench size for "Broached" version is located in the wrench size chart on page B-156.

Not all parts are available from stock. Please contact customer service for availability (800) 626-2120.
For more information on bearing capabilities outside of our standard offering, please contact Application Engineering (800) 626-2093.

Inch Cam Follower Bearings

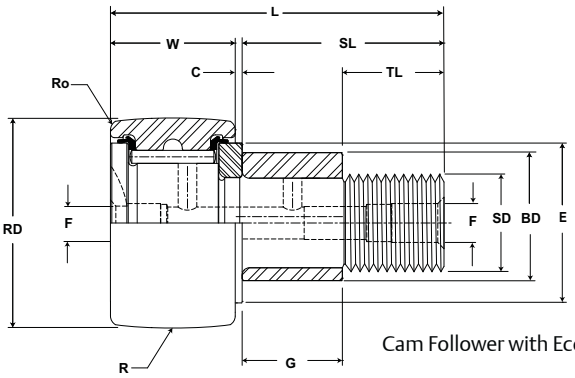

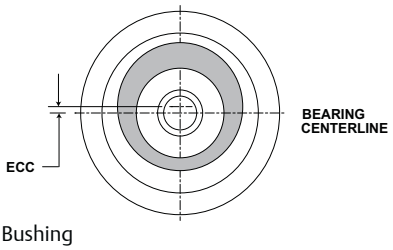

Cam Follower with Eccentric Bushing

CF, CFE, CFH

Part No. W/O Seals	Part No. With LUBRI-DISC Seals	HC Hole Center (Ref) inch mm	HD Radial Hole Diameter (Ref) inch mm	F Axial Hole Dia or Fitting (Ref) inch mm	E Min Boss Diameter (Ref) inch mm	Ro Outer Corner (Ref) inch mm	HBD Housing Bore Diameter Nom. inch mm	HBD Housing Bore Diameter Tol. inch mm	Thread Type	Clamping Torque in-lb Nm	Limiting Speed (Grease) RPM	WT Bearing Weight lb kg
CF 3	CF 3 S	.625 16	.125 3	.25 * 6	2.125 53.98	.125 3.18	1.2503 31.758	+.0002/-.0003 +.0005/-.0008	1 1/4-12	3,450 390	950	4.20 1.91
CF 3 B	CF 3 SB					N/A						
CCF 3	CCF 3 S											
CCF 3 B	CCF 3 SB											
CFE 3	CFE 3 S	.625 16	.125 3	.25 * 6		.125 3.18	1.753 44.52	+.001/-.001 +.025/-.025				
CFE 3 B	CFE 3 SB					N/A						
CCFE 3	CCFE 3 S											
CCFE 3 B	CCFE 3 SB											
CFH 3	CFH 3 S	.625 16	.125 3	.25 * 6	2.125 53.98	.125 3.18	1.5003 38.108	+.0002/-.0003 +.0005/-.0008	1 1/2-12	5,000 565	950	4.56 2.07
CFH 3 B	CFH 3 SB					N/A						
CCFH 3	CCFH 3 S											
CCFH 3 B	CCFH 3 SB											
CF 3 1/4	CF 3 1/4 S	.625 16	.125 3	.25 * 6	2.125 53.98	.125 3.18	1.2503 31.758	+.0002/-.0003 +.0005/-.0008	1 1/4-12	3,450 390	880	4.81 2.18
CF 3 1/4 B	CF 3 1/4 SB					N/A						
CCF 3 1/4	CCF 3 1/4 S											
CCF 3 1/4 B	CCF 3 1/4 SB											
CFE 3 1/4	CFE 3 1/4 S	.625 16	.125 3	.25 * 6		.125 3.18	1.753 44.52	+.001/-.001 +.025/-.025				
CFE 3 1/4 B	CFE 3 1/4 SB					N/A						
CCFE 3 1/4	CCFE 3 1/4 S											
CCFE 3 1/4 B	CCFE 3 1/4 SB											
CFH 3 1/4	CFH 3 1/4 S	.625 16	.125 3	.25 * 6	2.125 53.98	.125 3.18	1.5003 38.108	+.0002/-.0003 +.0005/-.0008	1 1/2-12	5,000 565	880	5.19 2.35
CFH 3 1/4 B	CFH 3 1/4 SB					N/A						
CCFH 3 1/4	CCFH 3 1/4 S											
CCFH 3 1/4 B	CCFH 3 1/4 SB											

* Lubrication hole (F) at bottom of hex hole and 1/4 inch straight drive fitting will ball check supplied but not installed.
For positive clamping, use housing thickness equal to G dimension =.010".
Clamping torque is based on dry threads. If threads are lubricated, use half of value shown.
Hex wrench size for "Broached" version is located in the wrench size chart on page B-156.

McGILL® Inch Cam Follower Bearings

Basic Construction Type: Stud Type Crowned / Cylindrical Outside Diameter

Rolling Elements: Full Complement Needle Roller

Bearing Material: Bearing Quality Steel

Seal Type: LUBRI-DISC®

Lubrication: Lithium Soap Grease NLGI #2

System Configuration: Concentric / Eccentric / Heavy Stud

Mounting Feature: Slot / Hex Hole

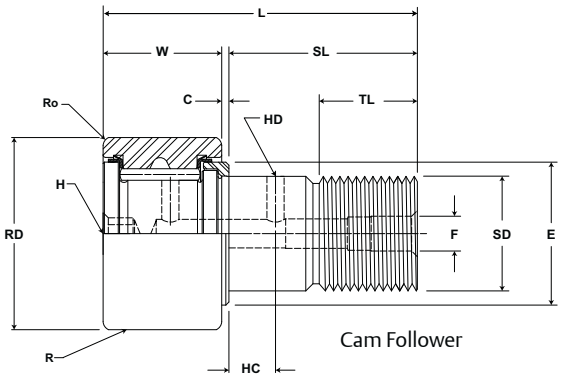

Cam Follower

CF, CFE, CFH

Part No.		RD		W		SD		SL	C	TL	L	R	ECC	G	BD	Track Roller Dynamic Rating	Track Roller Static Rating
W/O Seals	With LUBRI-DISC Seals	Roller Diameter		Roller Width		Stud Diameter		Stud Length	Endplate Extension	Min Thread Length	Length Overall	Crown Prefix CCF-XX	Eccentric Base Modifier CFE-XX				
		inch mm		inch mm		inch mm		inch mm		inch mm		inch mm	inch mm			lb/N	
		Nom.	Tol.	Nom.	Tol.	Nom.	Tol.	(Ref)	(Ref)	(Ref)	(Ref)	Radius (Ref)	(Ref)	+0/-.010	±.001		
CF 3 1/2 CF 3 1/2 B CCF 3 1/2 CCF 3 1/2 B	CF 3 1/2 S CF 3 1/2 SB CCF 3 1/2 S CCF 3 1/2 SB	3.500 88.90	+0/-.001 +0/-.03	2.000 50.80	+0 / -.005 +0 / -.13	1.375 34.93	+.001/-0 +.03/-0	2.75 69.9	.031 .8	1.375 34.93	4.78 121.4	Cylindrical 30 762	N/A	N/A	N/A	22,800 101,414	31,625 140,668
CFE 3 1/2 CFE 3 1/2 B CCFE 3 1/2 CCFE 3 1/2 B	CFE 3 1/2 S CFE 3 1/2 SB CCFE 3 1/2 S CCFE 3 1/2 SB	3.500 88.90	+0/-.001 +0/-.03	2.000 50.80	+0 / -.005 +0 / -.13	1.375 34.93	+.001/-0 +.03/-0	2.75 69.9	.031 .8	1.375 34.93	4.78 121.4	Cylindrical 30 762	.060 .52	1.375 34.93	1.812 46.02		
CFH 3 1/2 CFH 3 1/2 B CCFH 3 1/2 CCFH 3 1/2 B	CFH 3 1/2 S CFH 3 1/2 SB CCFH 3 1/2 S CCFH 3 1/2 SB	3.500 88.90	+0/-.001 +0/-.03	2.000 50.80	+0 / -.005 +0 / -.13	1.750 44.45	+.001/-0 +.03/-0	2.75 69.9	.031 .8	1.375 34.93	4.78 121.4	Cylindrical 30 762	N/A	N/A	N/A	22,800 101,414	63,250 281,336
CF 4 CF 4 B CCF 4 CCF 4 B	CF 4 S CF 4 SB CCF 4 S CCF 4 SB	4.000 101.60	+0/-.001 +0/-.03	2.250 57.15	+0 / -.005 +0 / -.13	1.500 38.10	+.001/-0 +.03/-0	3.50 88.9	.031 .8	1.50 38.1	5.78 146.8	Cylindrical 30 762	N/A	N/A	N/A	22,800 101,414	44,770 199,137
CFE 4 CFE 4 B CCFE 4 CCFE 4 B	CFE 4 S CFE 4 SB CCFE 4 S CCFE 4 SB	4.000 101.60	+0/-.001 +0/-.03	2.250 57.15	+0 / -.005 +0 / -.13	1.500 38.10	+.001/-0 +.03/-0	3.50 88.9	.031 .8	1.50 38.1	5.78 146.8	Cylindrical 30 762	.060 .52	2.000 50.80	2.000 50.80		
CFH 4 CFH 4 B CCFH 4 CCFH 4 B	CFH 4 S CFH 4 SB CCFH 4 S CCFH 4 SB	4.000 101.60	+0/-.001 +0/-.03	2.250 57.15	+0 / -.005 +0 / -.13	2.000 50.80	+.001/-0 +.03/-0	3.50 88.9	.031 .8	1.50 38.1	5.78 146.8	Cylindrical 30 762	N/A	N/A	N/A	29,985 133,373	89,540 398,274

Metric dimensions for reference only.
Hex wrench size for "Broached" version is located in the wrench size chart on page B-156.

Not all parts are available from stock. Please contact customer service for availability (800) 626-2120.
For more information on bearing capabilities outside of our standard offering, please contact Application Engineering (800) 626-2093.

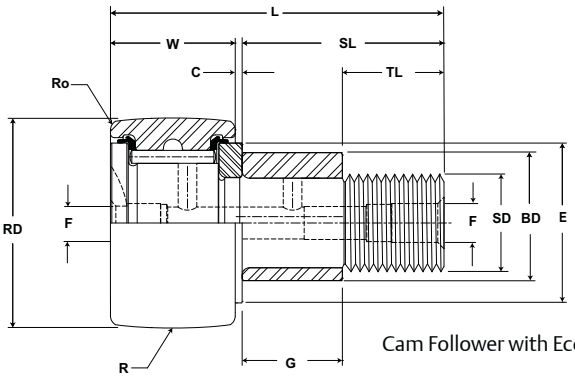

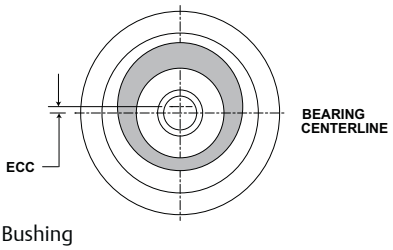

Cam Follower with Eccentric Bushing

CF, CFE, CFH

Part No.		HC	HD	F	E	Ro	HBD		Thread Type	Clamping Torque	Limiting Speed (Grease)	WT
W/O Seals	With LUBRI-DISC Seals	Hole Center	Radial Hole Diameter	Axial Hole Dia or Fitting	Min Boss Diameter	Outer Corner	Housing Bore Diameter					Bearing Weight
		inch mm			inch mm		inch mm			in-lb Nm	RPM	lb kg
		(Ref)	(Ref)	(Ref)	(Ref)	(Ref)	Nom.	Tol.				
CF 3 1/2 CF 3 1/2 B CCF 3 1/2 CCF 3 1/2 B	CF 3 1/2 S CF 3 1/2 SB CCF 3 1/2 S CCF 3 1/2 SB	.6875 17	.125 3	.25 * 6	2.438 61.91	.125 3.18 N/A	1.3753 34.933	+.0002/-.0003 +.0005/-.0008	1 3/8-12	4,200 475	820	6.42 2.91
CFE 3 1/2 CFE 3 1/2 B CCFE 3 1/2 CCFE 3 1/2 B	CFE 3 1/2 S CFE 3 1/2 SB CCFE 3 1/2 S CCFE 3 1/2 SB	.6875 17	.125 3	.25 * 6		.125 3.18 N/A	1.815 46.10	+.001/-.001 +.025/-.025				
CFH 3 1/2 CFH 3 1/2 B CCFH 3 1/2 CCFH 3 1/2 B	CFH 3 1/2 S CFH 3 1/2 SB CCFH 3 1/2 S CCFH 3 1/2 SB	.6875 17	.125 3	.25 * 6	2.438 61.91	.125 3.18 N/A	1.7503 44.458	+.0002/-.0003 +.0005/-.0008	1 3/4-12	5,000 565	820	7.01 3.18
CF 4 CF 4 B CCF 4 CCF 4 B	CF 4 S CF 4 SB CCF 4 S CCF 4 SB	.75 19	.125 3	.25 * 6	2.797 71.04	.125 3.18 N/A	1.5003 38.108	+.0002/-.0003 +.0005/-.0008	1 1/2-12	5,000 565	700	9.46 4.29
CFE 4 CFE 4 B CCFE 4 CCFE 4 B	CFE 4 S CFE 4 SB CCFE 4 S CCFE 4 SB	.75 19	.125 3	.25 * 6		.125 3.18 N/A	2.002 50.85	+.001/-.001 +.025/-.025				
CFH 4 CFH 4 B CCFH 4 CCFH 4 B	CFH 4 S CFH 4 SB CCFH 4 S CCFH 4 SB	.75 19	.125 3	.25 * 6	2.797 71.04	.125 3.18 N/A	2.0003 50.808	+.0002/-.0003 +.0005/-.0008	2-12	5,000 565	700	10.83 4.91

* Lubrication hole (F) at bottom of hex hole and 1/4 inch straight drive fitting will ball check supplied but not installed.
For positive clamping, use housing thickness equal to G dimension =.010".
Clamping torque is based on dry threads. If threads are lubricated, use half of value shown.
Hex wrench size for "Broached" version is located in the wrench size chart on page B-156.

McGILL® Inch Cam Follower Bearings

Basic Construction Type: Stud Type Crowned / Cylindrical Outside Diameter

Rolling Elements: Full Complement Needle Roller

Bearing Material: Bearing Quality Steel

Seal Type: LUBRI-DISC®

Lubrication: Lithium Soap Grease NLGI #2

System Configuration: Concentric / Eccentric / Heavy Stud

Mounting Feature: Slot / Hex Hole

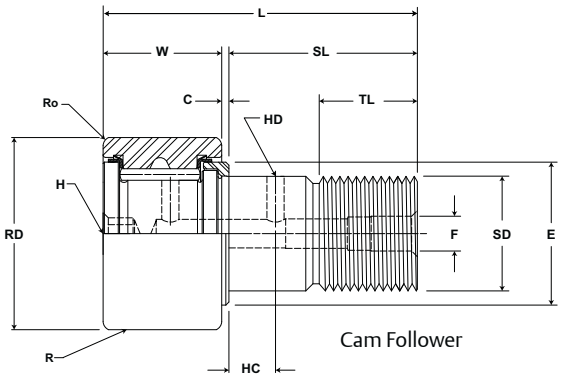

Cam Follower

CF, CFE, CFH

Part No.		RD		W		SD		SL	C	TL	L	R	ECC	G	BD	Track Roller Dynamic Rating	Track Roller Static Rating
W/O Seals	With LUBRI-DISC Seals	Roller Diameter		Roller Width		Stud Diameter		Stud Length	Endplate Extension	Min Thread Length	Length Overall	Crown Prefix CCF-XX	Eccentric Base Modifier CFE-XX				
		inch mm		inch mm		inch mm		inch mm		inch mm		inch mm	inch mm			lb/N	
		Nom.	Tol.	Nom.	Tol.	Nom.	Tol.	(Ref)	(Ref)	(Ref)	(Ref)	Radius (Ref)	(Ref)	+0/-.010	±.001		
-	CF 5 SB CCF 5 SB	5.000 127.00	+0/-.001 +0/-.03	2.750 69.85	+0 / -.005 +0 / -.13	2.000 50.80	+.001/-0 +.03/-0	5.06 128.6	.062 1.57	2.563 65.1	7.88 200.0	Cylindrical 48 1,219	N/A	N/A	N/A	46,575 207,166	67,950 302,242
	CFH 5 SB CCFH 5 SB	5.000 127.00	+0/-.001 +0/-.03	2.750 69.85	+0 / -.005 +0 / -.13	2.500 63.50	+.001/-0 +.03/-0	5.06 128.6	.062 1.57	2.563 65.1	7.88 200.0	Cylindrical 48 1,219	N/A	N/A	N/A	46,575 207,166	135,900 604,483
-	CF 6 SB CCF 6 SB	6.000 152.40	+0/-.001 +0/-.03	3.250 82.55	+0 / -.005 +0 / -.13	2.500 63.50	+.001/-0 +.03/-0	6.00 152.4	.062 1.57	3.00 76.2	9.31 236.5	Cylindrical 56 1,422	N/A	N/A	N/A	60,000 266,880	80,450 357,842
	CFH 6 SB CCFH 6 SB	6.000 152.40	+0/-.001 +0/-.03	3.250 82.55	+0 / -.005 +0 / -.13	2.500 63.50	+.001/-0 +.03/-0	6.00 152.4	.062 1.57	3.00 76.2	9.31 236.5	Cylindrical 56 1,422	N/A	N/A	N/A	60,000 266,880	160,900 715,683
--	CF 7 SB CCF 7 SB	7.000 177.80	+0/-.001 +0/-.03	3.750 95.25	+0 / -.005 +0 / -.13	3.000 76.20	+.001/-0 +.03/-0	7.69 195.3	.062 1.57	4.125 104.77	11.50 292.1	Cylindrical 60 1,524	N/A	N/A	N/A	75,380 335,290	106,930 475,625
	CFH 7 SB CCFH 7 SB	7.000 177.80	+0/-.001 +0/-.03	3.750 95.25	+0 / -.005 +0 / -.13	3.000 76.20	+.001/-0 +.03/-0	7.69 195.3	.062 1.57	4.125 104.77	11.50 292.1	Cylindrical 60 1,524	N/A	N/A	N/A	75,380 335,290	213,860 951,249
-	CF 8 SB CCF 8 SB	8.000 203.20	*	4.250 107.95	*	3.250 82.55	+.001/-0 +.03/-0	8.50 215.9	.125 3.175	4.25 107.95	12.81 325.4	Cylindrical 40 1,016	N/A	N/A	N/A	92,200 410,106	144,100 640,957
-	CF 9 SB CCF 9 SB	9.000 228.60	*	4.750 120.65	*	3.750 95.25	+.001/-0 +.03/-0	9.50 241.3	.125 3.175	4.75 120.65	14.31 363.5	Cylindrical 40 1,016	N/A	N/A	N/A	113,260 503,780	183,430 815,897
-	CF 10 SB CCF 10 SB	10.000 254.00	*	5.250 133.35	*	4.250 107.95	+.001/-0 +.03/-0	10.00 254.0	.125 3.175	4.75 120.65	15.31 388.9	Cylindrical 40 1,016	N/A	N/A	N/A	131,545 585,112	215,565 958,833

Metric dimensions for reference only.
*Standard tolerances do not apply. Consult Application Engineering.
Hex wrench size for "Broached" version is located in the wrench size chart on page B-156.

Not all parts are available from stock. Please contact customer service for availability (800) 626-2120.
For more information on bearing capabilities outside of our standard offering, please contact Application Engineering (800) 626-2093.

Inch Cam Follower Bearings

McGILL®

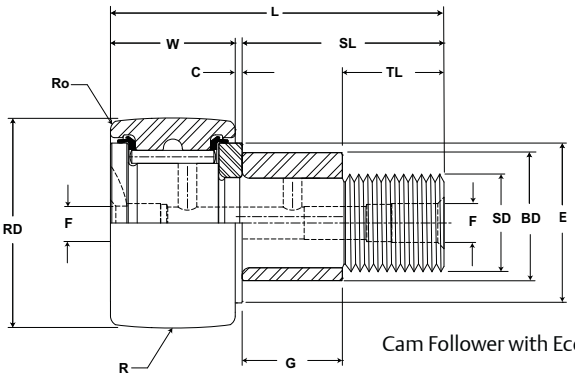

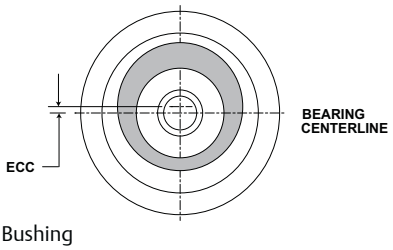

Cam Follower with Eccentric Bushing

CF, CFE, CFH

Part No.		HC	HD	F	E	Ro	HBD		Thread Type	Clamping Torque	Limiting Speed (Grease)	WT
W/O Seals	With LUBRI-DISC Seals	Hole Center	Radial Hole Diameter	Axial Hole Dia or Fitting	Min Boss Diameter	Outer Corner	Housing Bore Diameter					Bearing Weight
		inch mm			inch mm		inch mm			in-lb Nm	RPM	lb kg
		(Ref)	(Ref)	(Ref)	(Ref)	(Ref)	Nom.	Tol.				
-	CF 5 S CCF 5 S	.875 22	.1875 5	1/4" NPT	3.563 90.49	.125 3.18	2.0003 50.808	+.0002/-.0003 +.0005/-.0008	2-12	5,000 565	575	19.60 8.89
	CFH 5 S CCFH 5 S	.875 22	.1875 5	1/4" NPT	3.563 90.49	.125 3.18	2.5030 63.576	+.0002/-.0003 +.0005/-.0008	2 1/2-12	5,000 565	575	22.10 10.02
-	CF 6 S CCF 6 S	1.00 25	.1875 5	1/4" NPT	4.469 113.51	.125 3.18	2.5030 63.576	+.0002/-.0003 +.0005/-.0008	2 1/2-12	5,000 565	475	32.73 14.85
	CFH 6 S CCFH 6 S	1.00 25	.1875 5	1/4" NPT	4.469 113.51	.125 3.18	3.0003 76.208	+.0002/-.0003 +.0005/-.0008	3-12	5,000 565	475	36.41 16.52
--	CF 7 S CCF 7 S	1.25 32	.1875 5	1/4" NPT	5.188 131.76	.125 3.18	3.0003 76.208	+.0002/-.0003 +.0005/-.0008	3-12	5,000 565	400	54.73 24.83
	CFH 7 S CCFH 7 S	1.25 32	.1875 5	1/4" NPT	5.188 131.76	.125 3.18	3.5003 88.908	+.0002/-.0003 +.0005/-.0008	3 1/2-4	5,000 565	400	68.03 30.86
-	CF 8 S CCF 8 S	-	-	1/4" NPT	4.375 111.13	.219 5.56	3.2503 82.558	+.0002/-.0003 +.0005/-.0008	3 1/4-4	5,000 565	350	79.80 36.19
-	CF 9 S CCF 9 S	-	-	1/4" NPT	5.063 128.59	.250 6.35	3.7503 95.258	+.0002/-.0003 +.0005/-.0008	3 1/2-4	5,000 565	300	111.60 50.62
-	CF 10 S CCF 10 S	-	-	1/4" NPT	5.469 138.91	.281 7.14	4.2503 107.958	+.0002/-.0003 +.0005/-.0008	3 1/2-4	5,000 565	275	148.20 67.22

For positive clamping, use housing thickness equal to G dimension =.010".
Clamping torque based on dry threads. For wet (lubricated) threads, use half of value shown.
Hex wrench size for "Broached" version is located in the wrench size chart on page B-156.

McGILL® Inch Cam Follower Bearings

Basic Construction Type: Yoke Type Crowned/ Cylindrical Outside Diameter

Rolling Elements: Full Complement/Needle Roller

Bearing Material: Bearing Quality Steel

Seal Type: LUBRI-DISC®

Lubrication: Lithium Soap Grease NLGI #2

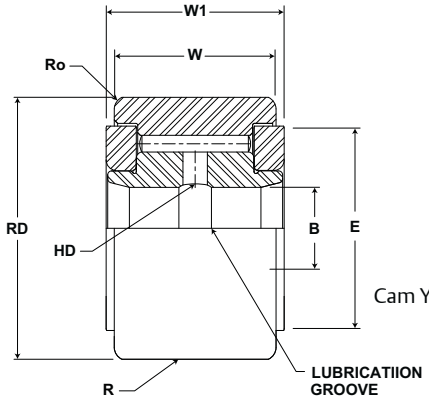

Cam Yoke Roller

CYR

Part No.		RD		W		B		W1		R	Track Roller Dynamic Rating	Track Roller Static Rating
W/O Seals	With LUBRI-DISC Seals	Roller Diameter		Roller Width		Bore Diameter		Overall Width		Crown Prefix CCYR-XX		
		inch mm		inch mm		inch mm		inch mm		inch mm	lb/N	lb/N
		Nom.	Tol.	Nom.	Tol.	Nom.	Tol.	Nom.	Tol.	Radius		
CYR 3/4	CYR 3/4 S	.750 19.05	+0/-.001 +0/-.03	.500 12.70	+0/-.005 +0/-.13	.250 6.35	+.0002/-.0004 +.0005/-.0010	.5625 14.28	+.005/-.01 +0.13/-0.25	Cylindrical	1,660 7,384	4,130 18,370
	CCYR 3/4 S									10 254		
CYR 7/8	CYR 7/8 S	.875 22.23	+0/-.001 +0/-.03	.500 12.70	+0/-.005 +0/-.13	.250 6.35	+.0002/-.0004 +.0005/-.0010	.5625 14.28	+.005/-.01 +0.13/-0.25	Cylindrical	1,660 7,384	4,130 18,370
	CCYR 7/8 S									10 254		
CYR 1	CYR 1 S	1.000 25.40	+0/-.001 +0/-.03	.625 15.88	+0/-.005 +0/-.13	.3125 7.94	+.0002/-.0004 +.0005/-.0010	.6875 17.46	+.005/-.01 +0.13/-0.25	Cylindrical	2,225 9,897	6,120 27,222
	CCYR 1 S									12 305		
CYR 1 1/8	CYR 1 1/8 S	1.125 28.58	+0/-.001 +0/-.03	.625 15.88	+0/-.005 +0/-.13	.3125 7.94	+.0002/-.0004 +.0005/-.0010	.6875 17.46	+.005/-.01 +0.13/-0.25	Cylindrical	2,225 9,897	6,120 27,222
	CCYR 1 1/8 S									12 305		
CYR 1 1/4	CYR 1 1/4 S	1.250 31.75	+0/-.001 +0/-.03	.750 19.05	+0/-.005 +0/-.13	.375 9.53	+.0002/-.0004 +.0005/-.0010	.8125 20.64	+.005/-.01 +0.13/-0.25	Cylindrical	3,930 17,481	8,500 37,808
	CCYR 1 1/4 S									14 356		
CYR 1 3/8	CYR 1 3/8 S	1.375 34.93	+0/-.001 +0/-.03	.750 19.05	+0/-.005 +0/-.13	.375 9.53	+.0002/-.0004 +.0005/-.0010	.8125 20.64	+.005/-.01 +0.13/-0.25	Cylindrical	3,930 17,481	8,500 37,808
	CCYR 1 3/8 S									14 356		
CYR 1 1/2	CYR 1 1/2 S	1.500 38.10	+0/-.001 +0/-.03	.875 22.23	+0/-.005 +0/-.13	.4375 11.11	+.0002/-.0004 +.0005/-.0010	.9375 23.81	+.005/-.01 +0.13/-0.25	Cylindrical	4,840 21,528	11,280 50,173
	CCYR 1 1/2 S									20 508		
CYR 1 5/8	CYR 1 5/8 S	1.625 41.28	+0/-.001 +0/-.03	.875 22.23	+0/-.005 +0/-.13	.4375 11.11	+.0002/-.0004 +.0005/-.0010	.9375 23.81	+.005/-.01 +0.13/-0.25	Cylindrical	4,840 21,528	11,280 50,173
	CCYR 1 5/8 S									20 508		
CYR 1 3/4	CYR 1 3/4 S	1.750 44.45	+0/-.001 +0/-.03	1.000 25.40	+0/-.005 +0/-.13	.500 12.70	+.0002/-.0004 +.0005/-.0010	1.0625 26.98	+.005/-.01 +0.13/-0.25	Cylindrical	6,385 28,400	115,840 515,256
	CCYR 1 3/4 S									20 508		

Metric dimensions for reference only.
Not all parts are available from stock. Please contact customer service for availability (800) 626-2120.
For more information on bearing capabilities outside of our standard offering, please contact Application Engineering (800) 626-2093.

Inch Cam Follower Bearings

McGILL®

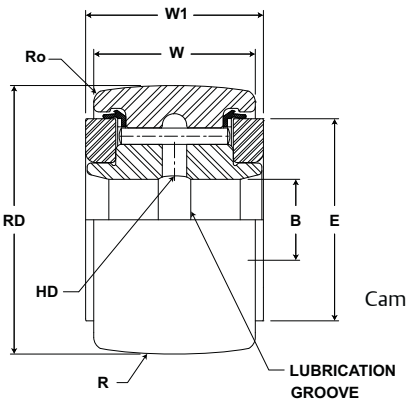

Cam Yoke Roller with Seals

CYR

Part No.		HD	E	Ro	Recommended Shaft Diameters						Limiting Speed	WT
		Hole Diameter	Min. Clamping Diameter	Outer Corner	Push Fit		Drive Fit		Press Fit			Bearing Weight
W/O Seals	With LUBRI-DISC Seals	inch mm	inch mm		inch mm		inch mm		inch mm		RPM	lb kg
		(Ref)	(Ref)	(Ref)	Nom	Tol	Nom	Tol	Nom	Tol		
CYR 3/4	CYR 3/4 S	.09 2.4	.61 15.5	.02 .4	.2495 6.337	±.0002 ±.005	.2501 6.353	±.0002 ±.005	.2503 6.357	±.0002 ±.005	6,400	.06 .03
	CCYR 3/4 S			N/A								
CYR 7/8	CYR 7/8 S	.09 2.4	.61 15.5	.02 .4	.2495 6.337	±.0002 ±.005	.2501 6.353	±.0002 ±.005	.2503 6.357	±.0002 ±.005	5,400	.08 .04
	CCYR 7/8 S			N/A								
CYR 1	CYR 1 S	.09 2.4	.78 19.8	.03 .8	.3120 7.925	±.0002 ±.005	.3126 7.940	±.0002 ±.005	.3128 7.945	±.0002 ±.005	4,800	.15 .07
	CCYR 1 S			N/A								
CYR 1 1/8	CYR 1 1/8 S	.09 2.4	.78 19.8	.03 .8	.3120 7.925	±.0002 ±.005	.3126 7.940	±.0002 ±.005	.3128 7.945	±.0002 ±.005	3,400	.17 .08
	CCYR 1 1/8 S			N/A								
CYR 1 1/4	CYR 1 1/4 S	.09 2.4	.98 25.0	.03 .8	.3745 9.512	±.0002 ±.005	.3751 9.527	±.0002 ±.005	.3753 9.532	±.0002 ±.005	3,100	.24 .11
	CCYR 1 1/4 S			N/A								
CYR 1 3/8	CYR 1 3/8 S	.09 2.4	.98 25.0	.05 1.2	.3745 9.512	±.0002 ±.005	.3751 9.527	±.0002 ±.005	.3753 9.532	±.0002 ±.005	2,800	.30 .14
	CCYR 1 3/8 S			N/A								
CYR 1 1/2	CYR 1 1/2 S	.09 2.4	1.09 27.8	.06 1.6	.4370 11.100	±.0002 ±.005	.4376 11.115	±.0002 ±.005	.4378 11.120	±.0002 ±.005	2,500	.41 .19
	CCYR 1 1/2 S			N/A								
CYR 1 5/8	CYR 1 5/8 S	.09 2.4	1.09 27.8	.06 1.6	.4370 11.100	±.0002 ±.005	.4376 11.115	±.0002 ±.005	.4378 11.120	±.0002 ±.005	2,350	.50 .23
	CCYR 1 5/8 S			N/A								
CYR 1 3/4	CYR 1 3/4 S	.09 2.4	1.25 31.8	.06 1.6	.4995 12.687	±.0002 ±.005	.5001 12.703	±.0002 ±.005	.5005 12.713	±.0002 ±.005	2,200	.64 .29
	CCYR 1 3/4 S			N/A								

McGILL® Inch Cam Follower Bearings

Basic Construction Type: Yoke Type Crowned/ Cylindrical Outside Diameter

Rolling Elements: Full Complement/Needle Roller

Bearing Material: Bearing Quality Steel

Seal Type: LUBRI-DISC®

Lubrication: Lithium Soap Grease NLGI #2

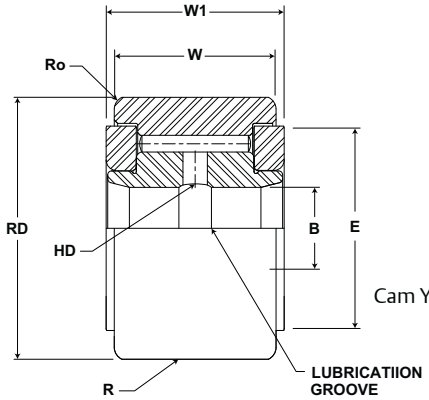

Cam Yoke Roller

CYR

Part No.		RD		W		B		W1		R	Track Roller Dynamic Rating	Track Roller Static Rating
W/O Seals	With LUBRI-DISC Seals	Roller Diameter		Roller Width		Bore Diameter		Overall Width		Crown Prefix CCYR-XX		
		inch mm		inch mm		inch mm		inch mm		inch mm	lb/N	lb/N
		Nom.	Tol.	Nom.	Tol.	Nom.	Tol.	Nom.	Tol.	Radius		
CYR 1 7/8	CYR 1 7/8 S	1.875 47.63	+0/-.001 +0/-.03	1.000 25.40	+0/-.005 +0/-.13	.500 12.70	+.0001/-.0005 +.0003/-.0013	1.0625 26.98	+.005/-.01 +0.13/-0.25	Cylindrical	6,385 28,400	115,840 515,256
	CCYR 1 7/8 S									20 508		
CYR 2	CYR 2 S	2.000 50.80	+0/-.001 +0/-.03	1.250 31.75	+0/-.005 +0/-.13	.625 15.88	+.0001/-.0005 +.0003/-.0013	1.3125 33.34	+.005/-.01 +0.13/-0.25	Cylindrical	8,090 35,984	21,140 94,031
	CCYR 2 S									24 610		
CYR 2 1/4	CYR 2 1/4 S	2.250 57.15	+0/-.001 +0/-.03	1.250 31.75	+0/-.005 +0/-.13	.625 15.88	+.0001/-.0005 +.0003/-.0013	1.3125 33.34	+.005/-.01 +0.13/-0.25	Cylindrical	8,090 35,984	21,140 94,031
	CCYR 2 1/4 S									24 610		
CYR 2 1/2	CYR 2 1/2 S	2.500 63.50	+0/-.001 +0/-.03	1.500 38.10	+0/-.005 +0/-.13	.750 19.05	+.0001/-.0005 +.0003/-.0013	1.5625 39.69	+.005/-.01 +0.13/-0.25	Cylindrical	11,720 52,131	32,900 146,339
	CCYR 2 1/2 S									30 762		
CYR 2 3/4	CYR 2 3/4 S	2.750 69.85	+0/-.001 +0/-.03	1.500 38.10	+0/-.005 +0/-.13	.750 19.05	+.0001/-.0005 +.0003/-.0013	1.5625 39.69	+.005/-.01 +0.13/-0.25	Cylindrical	11,720 52,131	32,900 146,339
	CCYR 2 3/4 S									30 762		
CYR 3	CYR 3 S	3.000 76.20	+0/-.001 +0/-.03	1.750 44.45	+0/-.005 +0/-.13	1.000 25.40	+.0001/-.0005 +.0003/-.0013	1.8125 46.04	+.005/-.01 +0.13/-0.25	Cylindrical	15,720 69,923	49,820 221,599
	CCYR 3 S									30 762		
CYR 3 1/4	CYR 3 1/4 S	3.250 82.55	+0/-.001 +0/-.03	1.750 44.45	+0/-.005 +0/-.13	1.000 25.40	+.0001/-.0005 +.0003/-.0013	1.8125 46.04	+.005/-.01 +0.13/-0.25	Cylindrical	15,720 69,923	49,820 221,599
	CCYR 3 1/4 S									30 762		
CYR 3 1/2	CYR 3 1/2 S	3.500 88.90	+0/-.001 +0/-.03	2.000 50.80	+0/-.005 +0/-.13	1.125 28.58	+.0001/-.0005 +.0003/-.0013	2.0625 52.39	+.005/-.01 +0.13/-0.25	Cylindrical	22,800 101,414	63,250 281,336
	CCYR 3 1/2 S									30 762		
CYR 4	CYR 4 S	4.000 101.60	+0/-.001 +0/-.03	2.250 57.15	+0/-.005 +0/-.13	1.250 31.75	+.0001/-.0005 +.0003/-.0013	2.3125 58.74	+.005/-.01 +0.13/-0.25	Cylindrical	29,985 133,373	89,540 398,274
	CCYR 4 S									30 762		

Metric dimensions for reference only.
Not all parts are available from stock. Please contact customer service for availability (800) 626-2120.
For more information on bearing capabilities outside of our standard offering, please contact Application Engineering (800) 626-2093.

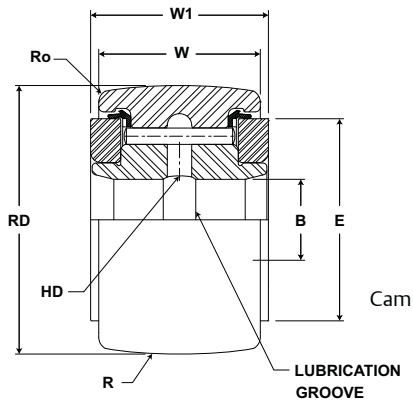

Cam Yoke Roller with Seals

CYR

Part No.		HD	E	Ro	Recommended Shaft Diameters						Limiting Speed	WT
W/O Seals	With LUBRI-DISC Seals	Hole Diameter	Min. Clamping Diameter	Outer Corner	Push Fit		Drive Fit		Press Fit			Bearing Weight
		inch mm			inch mm		inch mm		inch mm		RPM	lb kg
		(Ref)	(Ref)	(Ref)	Nom	Tol	Nom	Tol	Nom	Tol		
CYR 1 7/8	CYR 1 7/8 S	.09 2.4	1.25 31.8	.06 1.6	.4995 12.687	±.0002 ±.005	.5001 12.703	±.0002 ±.005	.5005 12.713	±.0002 ±.005	2,000	.80 .36
	CCYR 1 7/8 S			N/A								
CYR 2	CYR 2 S	.13 3.2	1.41 35.7	.09 2.4	.6245 15.862	±.0002 ±.005	.6245 15.862	±.0002 ±.005	.6245 15.862	±.0002 ±.005	1,400	1.05 .48
	CCYR 2 S			N/A								
CYR 2 1/4	CYR 2 1/4 S	.13 3.2	1.41 35.7	.09 2.4	.6245 15.862	±.0002 ±.005	.6251 15.877	±.0002 ±.005	.6255 15.887	±.0002 ±.005	1,300	1.32 .59
	CCYR 2 1/4 S			N/A								
CYR 2 1/2	CYR 2 1/2 S	.13 3.2	1.69 42.9	.09 2.4	.7495 19.037	±.0002 ±.005	.7501 19.053	±.0002 ±.005	.75015 19.063	±.0002 ±.005	1,100	1.80 .82
	CCYR 2 1/2 S			N/A								
CYR 2 3/4	CYR 2 3/4 S	.13 3.2	1.69 42.9	.09 2.4	.7495 19.037	±.0002 ±.005	.7501 19.053	±.0002 ±.005	.75015 19.063	±.0002 ±.005	1,050	2.25 1.02
	CCYR 2 3/4 S			N/A								
CYR 3	CYR 3 S	.13 3.2	2.13 54.0	.13 3.2	.9994 25.385	+.0002/-.0003 +.005/-.008	1.0002 25.405	+.0002/-.0003 +.005/-.008	1.0006 25.415	+.0002/-.0003 +.005/-.008	950	3.10 1.41
	CCYR 3 S			N/A								
CYR 3 1/4	CYR 3 1/4 S	.13 3.2	2.13 54.0	.13 3.2	.9994 25.385	+.0002/-.0003 +.005/-.008	1.0002 25.405	+.0002/-.0003 +.005/-.008	1.0006 25.415	+.0002/-.0003 +.005/-.008	880	3.62 1.64
	CCYR 3 1/4 S			N/A								
CYR 3 1/2	CYR 3 1/2 S	.13 3.2	2.44 61.9	.13 3.2	1.1244 28.560	+.0002/-.0003 +.005/-.008	1.1252 28.580	+.0002/-.0003 +.005/-.008	1.1256 28.590	+.0002/-.0003 +.005/-.008	820	4.95 2.25
	CCYR 3 1/2 S			N/A								
CYR 4	CYR 4 S	.13 3.2	2.80 71.0	.13 3.2	1.2494 31.735	+.0002/-.0003 +.005/-.008	1.2502 31.755	+.0002/-.0003 +.005/-.008	1.2506 31.765	+.0002/-.0003 +.005/-.008	700	7.05 3.19
	CCYR 4 S			N/A								

McGILL® Inch Cam Follower Bearings

Basic Construction Type: Yoke Type Crowned/ Cylindrical Outside Diameter

Rolling Elements: Full Complement/Needle Roller

Bearing Material: Bearing Quality Steel

Seal Type: LUBRI-DISC®

Lubrication: Lithium Soap Grease NLGI #2

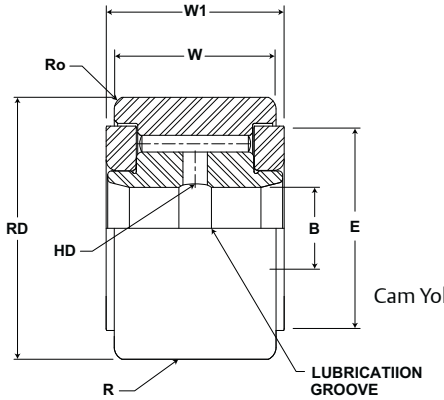

Cam Yoke Roller

CYR

Part No.		RD		W		B		W1		R	Track Roller Dynamic Rating	Track Roller Static Rating
W/O Seals	With LUBRI-DISC Seals	Roller Diameter		Roller Width		Bore Diameter		Overall Width		Crown Prefix CCYR-XX		
		inch mm		inch mm		inch mm		inch mm		inch mm	lb/N	lb/N
		Nom.	Tol.	Nom.	Tol.	Nom.	Tol.	Nom.	Tol.	Radius		
-	CYR 5 S	5.000 127.00	+0/-.001 +0/-.03	2.750 69.85	+0/-.005 +0/-.13	1.750 44.45	+.0001/-.0005 +.0003/-.0013	2.875 73.03	+.005/-.01 +0.13/-0.25	Cylindrical	46,575 207,166	135,900 604,483
	CCYR 5 S									48 1,219		
-	CYR 6 S	6.000 152.40	+0/-.001 +0/-.03	3.250 82.55	+0/-.005 +0/-.13	2.250 57.15	+.0001/-.0005 +.0003/-.0013	3.375 85.725	+.005/-.01 +0.13/-0.25	Cylindrical	60,000 266,880	160,900 715,683
	CCYR 6 S									56 1,422		
-	CYR 7 S	7.000 177.80	+0/-.001 +0/-.03	3.750 95.25	+0/-.005 +0/-.13	2.750 69.85	+.0001/-.0005 +.0003/-.0013	3.875 98.43	+.005/-.01 +0.13/-0.25	Cylindrical	75,380 335,290	213,860 951,249
	CCYR 7 S									60 1,524		
-	CYR 8 S	8.000 203.20	*	4.250 107.95	*	3.255 82.68	+.001/-0 +.025/-0	4.50 114.3	+.005/-.01 +0.13/-0.25	Cylindrical	92,200 410,106	288,200 1,281,914
	CCYR 8 S									40 1,016		
-	CYR 9 S	9.000 228.60	*	4.750 120.65	*	3.755 95.38	+.001/-0 +.025/-0	5.00 127.0	+.005/-.01 +0.13/-0.25	Cylindrical	113,260 503,780	366,850 1,631,749
	CCYR 9 S									40 1,016		
-	CYR 10 S	10.000 254.00	*	5.250 133.35	*	4.255 108.08	+.001/-0 +.025/-0	5.50 139.7	+.005/-.01 +0.13/-0.25	Cylindrical	131,545 585,112	431,130 1,917,666
	CCYR 10 S									40 1,016		

Metric dimensions for reference only.
Not all parts are available from stock. Please contact customer service for availability (800) 626-2120.
For more information on bearing capabilities outside of our standard offering, please contact Application Engineering (800) 626-2093.

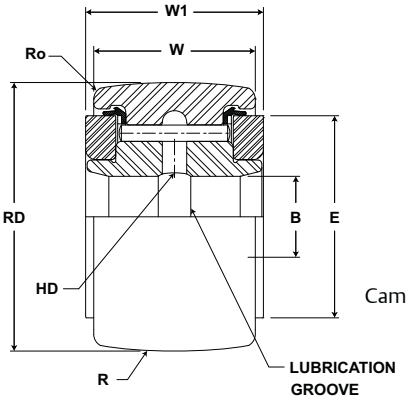

Cam Yoke Roller with Seals

CYR

Part No.		HD	E	Ro	Recommended Shaft Diameters						Limiting Speed	WT
W/O Seals	With LUBRI-DISC Seals	Hole Diameter	Min. Clamping Diameter	Outer Corner	Push Fit		Drive Fit		Press Fit			Bearing Weight
		inch mm			inch mm		inch mm		inch mm		RPM	lb kg
		(Ref)	(Ref)	(Ref)	Nom	Tol	Nom	Tol	Nom	Tol		
-	CYR 5 S	.19 4.8	3.56 90.5	.13 3.2	1.7494 44.435	+.0002/-.0003 +.005/-.008	1.7502 44.455	+.0002/-.0003 +.005/-.008	1.7506 44.465	+.0002/-.0003 +.005/-.008	575	14.34 6.59
	CCYR 5 S			N/A								
-	CYR 6 S	.19 4.8	4.47 113.5	.13 3.2	2.2494 57.135	+.0002/-.0003 +.005/-.008	2.2502 57.155	+.0002/-.0003 +.005/-.008	2.2506 57.165	+.0002/-.0003 +.005/-.008	475	20.16 9.14
	CCYR 6 S			N/A								
-	CYR 7 S	.19 4.8	5.19 131.8	.13 3.2	2.7494 69.835	+.0002/-.0003 +.005/-.008	2.7502 69.855	+.0002/-.0003 +.005/-.008	2.7506 69.865	+.0002/-.0003 +.005/-.008	400	32.43 14.71
	CCYR 7 S			N/A								
-	CYR 8 S	.25 6.4	4.38 111.1	.22 5.6	3.2545 82.664	±.0005 ±.0013	3.2560 82.702	±.0005 ±.0013	3.2565 82.715	±.0005 ±.0013	350	47.30 21.45
	CCYR 8 S			N/A								
-	CYR 9 S	.31 7.9	5.06 128.6	.25 6.4	3.7545 95.364	±.0005 ±.0013	3.7560 95.402	±.0005 ±.0013	3.7565 95.415	±.0005 ±.0013	300	65.70 29.80
	CCYR 9 S			N/A								
-	CYR 10 S	.38 9.5	5.47 138.9	.28 7.1	4.2545 108.064	±.0005 ±.0013	4.2560 108.102	±.0005 ±.0013	4.2565 108.115	±.0005 ±.0013	275	89.20 40.46
	CCYR 10 S			N/A								

McGILL® Inch Cam Follower Bearings

Basic Construction Type: Stud Type Crowned / Cylindrical Outside Diameter

Rolling Elements: Non-Metallic Bushing

Bearing Material: Bearing Quality Steel

Seal Type: LUBRI-DISC®

Lubrication: None - Self Lubricating Bushing

System Configuration: Concentric / Eccentric

Mounting Feature: Slot / Hex Hole

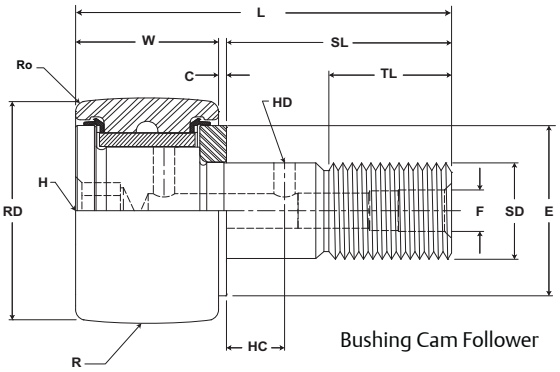

Bushing Cam Follower

BCF, BCFE

Part No.	RD		W		SD		SL	C	TL	L	R	ECC	G	BD	Track Roller Dynamic Rating	Track Roller Static Rating
With LUBRI-DISC Seals	Roller Diameter		Roller Width		Stud Diameter		Stud Length	Endplate Extension	Minimum Thread Length	Length Overall	Crown Prefix BCCF-XX	Eccentric Base Modifier BCFE-XX				
	inch mm		inch mm		inch mm		inch mm		inch mm		inch mm	inch mm			N/lb	N/lb
	Nom.	Tol.	Nom.	Tol.	Nom.	Tol.	(Ref)	(Ref)	(Ref)	(Ref)	Radius	(Ref)	+0/-.001 (+0/-.03)	± .001 (± .03)		
BCF 1/2 S BCF 1/2 SB BCCF 1/2 S BCCF 1/2 SB	.500 12.70	+0/-.001 +0/-.03	.375 9.53	+0 / -.005 +0 / -.13	.190 4.83	+.001/-0 +.03/-0	.625 15.9	.03 .8	.25 6.4	1.03 26.2	Cylindrical 7 178	N/A	N/A	N/A	See Load-Speed Chart	
BCFE 1/2 S BCFE 1/2 SB BCCFE 1/2 S BCCFE 1/2 SB	.500 12.70	+0/-.001 +0/-.03	.375 9.53	+0 / -.005 +0 / -.13	.190 4.83	+.001/-0 +.03/-0	.625 15.9	.03 .8	.25 6.4	1.03 26.2	Cylindrical 7 178	.010 .25	.38 9.5	.25 6.4	See Load-Speed Chart	
BCF 9/16 S BCF 9/16 SB BCCF 9/16 S BCCF 9/16 SB	.5625 14.29	+0/-.001 +0/-.03	.375 9.53	+0 / -.005 +0 / -.13	.190 4.83	+.001/-0 +.03/-0	.625 15.9	.03 .8	.25 6.4	1.03 26.2	Cylindrical 7 178	N/A	N/A	N/A	See Load-Speed Chart	
BCFE 9/16 S BCFE 9/16 SB BCCFE 9/16 S BCCFE 9/16 SB	.5625 14.29	+0/-.001 +0/-.03	.375 9.53	+0 / -.005 +0 / -.13	.190 4.83	+.001/-0 +.03/-0	.625 15.9	.03 .8	.25 6.4	1.03 26.2	Cylindrical 7 178	.010 .25	.38 9.5	.25 6.4	See Load-Speed Chart	
BCF 5/8 S BCF 5/8 SB BCCF 5/8 S BCCF 5/8 SB	.625 15.88	+0/-.001 +0/-.03	.4375 11.11	+0 / -.005 +0 / -.13	.250 6.35	+.001/-0 +.03/-0	.75 19.1	.03 .8	.31 7.9	1.22 31.0	Cylindrical 8 203	N/A	N/A	N/A	See Load-Speed Chart	
BCFE 5/8 S BCFE 5/8 SB BCCFE 5/8 S BCCFE 5/8 SB	.625 15.88	+0/-.001 +0/-.03	.4375 11.11	+0 / -.005 +0 / -.13	.250 6.35	+.001/-0 +.03/-0	.75 19.1	.03 .8	.31 7.9	1.22 31.0	Cylindrical 8 203	.015 .38	.44 11.1	.38 9.5	See Load-Speed Chart	
BCF 11/16 S BCF 11/16 SB BCCF 11/16 S BCCF 11/16 SB	.6875 17.46	+0/-.001 +0/-.03	.4375 11.11	+0 / -.005 +0 / -.13	.250 6.35	+.001/-0 +.03/-0	.75 19.1	.03 .8	.31 7.9	1.22 31.0	Cylindrical 8 203	N/A	N/A	N/A	See Load-Speed Chart	
BCFE 11/16 S BCFE 11/16 SB BCCFE 11/16 S BCCFE 11/16 SB	.6875 17.46	+0/-.001 +0/-.03	.4375 11.11	+0 / -.005 +0 / -.13	.250 6.35	+.001/-0 +.03/-0	.75 19.1	.03 .8	.31 7.9	1.22 31.0	Cylindrical 8 203	.015 .38	.44 11.1	.38 9.5	See Load-Speed Chart	

Metric dimensions for reference only.
Not all parts are available from stock. Please contact customer service for availability (800) 626-2120.
For more information on bearing capabilities outside of our standard offering, please contact Application Engineering (800) 626-2093.

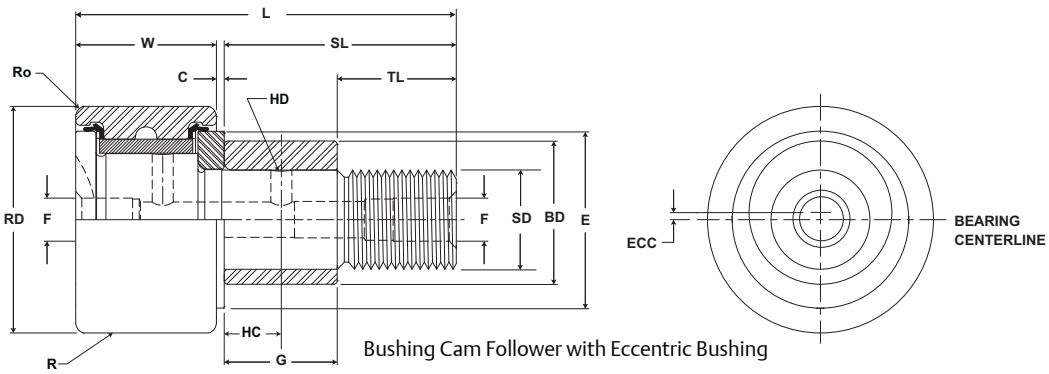

Bushing Cam Follower with Eccentric Bushing

BCF, BCFE

Part No. With LUBRI-DISC Seals	HC Hole Center (inch mm) (Ref)	HD Radial Hole Diameter (inch mm) (Ref)	F Axial Hole Dia or Fitting (inch mm) (Ref)	H Hex Hole (inch mm) (Ref)	E Min Boss Diameter (inch mm) (Ref)	Ro Outer Corner Radius (inch mm) (Ref)	Housing Bore Diameter (inch mm) Nom.	Housing Bore Diameter (inch mm) Tol.	Thread Type	Clamping Torque in-lb Nm	Limiting Speed RPM	WT Bearing Weight lb kg
BCF 1/2 S BCF 1/2 SB BCCF 1/2 S BCCF 1/2 SB	-	-	.125 3.17	.125 3.17	.41 10.4	.02 .4 N/A	.1903 4.834	+.0002/-.0003 +.0005/-.0008	10-32	15 2	See Load-Speed Chart	.04 .02
BCFE 1/2 S BCFE 1/2 SB BCCFE 1/2 S BCCFE 1/2 SB	-	-	.125 3.17	.125 3.17	.41 10.4	.02 .4 N/A	.253 6.426	+.001/-.001 +.025/-.025	10-32	15 2	See Load-Speed Chart	.04 .02
BCF 9/16 S BCF 9/16 SB BCCF 9/16 S BCCF 9/16 SB	-	-	.125 3.17	.125 3.17	.41 10.4	.02 .4 N/A	.1903 4.834	+.0002/-.0003 +.0005/-.0008	10-32	15 2	See Load-Speed Chart	.04 .02
BCFE 9/16 S BCFE 9/16 SB BCCFE 9/16 S BCCFE 9/16 SB	-	-	.125 3.17	.125 3.17	.41 10.4	.02 .4 N/A	.253 6.426	+.001/-.001 +.025/-.025	10-32	15 2	See Load-Speed Chart	.04 .02
BCF 5/8 S BCF 5/8 SB BCCF 5/8 S BCCF 5/8 SB	-	-	.125 3.17	.125 3.17	.46 11.7	.02 .4 N/A	.2503 6.358	+.0002/-.0003 +.0005/-.0008	1/4-28	35 4	See Load-Speed Chart	.05 .02
BCFE 5/8 S BCFE 5/8 SB BCCFE 5/8 S BCCFE 5/8 SB	-	-	.125 3.17	.125 3.17	.46 11.7	.02 .4 N/A	.378 9.60	+.001/-.001 +.025/-.025	1/4-28	35 4	See Load-Speed Chart	.05 .02
BCF 11/16 S BCF 11/16 SB BCCF 11/16 S BCCF 11/16 SB	-	-	.125 3.17	.125 3.17	.46 11.7	.02 .4 N/A	.2503 6.358	+.0002/-.0003 +.0005/-.0008	1/4-28	35 4	See Load-Speed Chart	.06 .03
BCFE 11/16 S BCFE 11/16 SB BCCFE 11/16 S BCCFE 11/16 SB	-	-	.125 3.17	.125 3.17	.46 11.7	.02 .4 N/A	.378 9.60	+.001/-.001 +.025/-.025	1/4-28	35 4	See Load-Speed Chart	.06 .03

McGILL® Inch Cam Follower Bearings

Basic Construction Type: Stud Type Crowned / Cylindrical Outside Diameter

Rolling Elements: Non-Metallic Bushing

Bearing Material: Bearing Quality Steel

Seal Type: LUBRI-DISC®

Lubrication: None - Self Lubricating Bushing

System Configuration: Concentric / Eccentric

Mounting Feature: Slot / Hex Hole

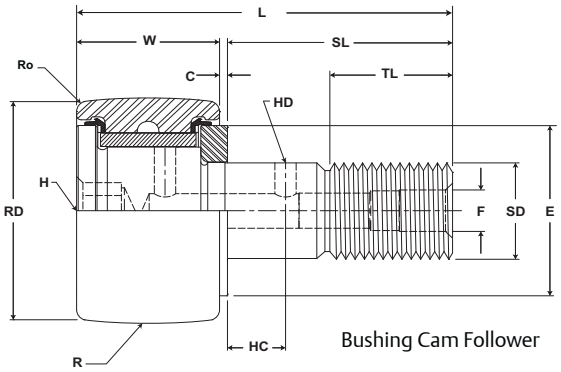

Bushing Cam Follower

BCF, BCFE

Part No.	RD		W		SD		SL	C	TL	L	R	ECC	G	BD	Track Roller Dynamic Rating	Track Roller Static Rating
With LUBRI-DISC Seals	Roller Diameter		Roller Width		Stud Diameter		Stud Length	Endplate Extension	Minimum Thread Length	Length Overall	Crown Prefix BCCF-XX	Eccentric Base Modifier BCFE-XX				
	inch mm		inch mm		inch mm		inch mm		inch mm		inch mm	inch mm			N/lb	N/lb
	Nom.	Tol.	Nom.	Tol.	Nom.	Tol.	(Ref)	(Ref)	(Ref)	(Ref)	Radius	(Ref)	+0/-.001 (+0/-.03)	± .001 (± .03)		
BCF 3/4 S BCF 3/4 SB BCCF 3/4 S BCCF 3/4 SB	.750 19.05	+0/-.001 +0/-.03	.500 12.70	+0 / -.005 +0 / -.13	.375 9.53	+.001/-0 +.03/-0	.875 22.2	.03 .8	.38 9.5	1.41 35.7	Cylindrical 10 254	N/A	N/A	N/A	See Load-Speed Chart	
BCFE 3/4 S BCFE 3/4 SB BCCFE 3/4 S BCCFE 3/4 SB	.750 19.05	+0/-.001 +0/-.03	.500 12.70	+0 / -.005 +0 / -.13	.375 9.53	+.001/-0 +.03/-0	.875 22.2	.03 .8	.38 9.5	1.41 35.7	Cylindrical 10 254	.015 .38	.50 12.7	.50 12.7	See Load-Speed Chart	
BCF 7/8 S BCF 7/8 SB BCCF 7/8 S BCCF 7/8 SB	.875 22.23	+0/-.001 +0/-.03	.500 12.70	+0 / -.005 +0 / -.13	.375 9.53	+.001/-0 +.03/-0	.875 22.2	.03 .8	.38 9.5	1.41 35.7	Cylindrical 10 254	N/A	N/A	N/A	See Load-Speed Chart	
BCFE 7/8 S BCFE 7/8 SB BCCFE 7/8 S BCCFE 7/8 SB	.875 22.23	+0/-.001 +0/-.03	.500 12.70	+0 / -.005 +0 / -.13	.375 9.53	+.001/-0 +.03/-0	.875 22.2	.03 .8	.38 9.5	1.41 35.7	Cylindrical 10 254	.015 .38	.50 12.7	.50 12.7	See Load-Speed Chart	
BCF 1 S BCF 1 SB BCCF 1 S BCCF 1 SB	1.000 25.40	+0/-.001 +0/-.03	.625 15.88	+0 / -.005 +0 / -.13	.4375 11.11	+.001/-0 +.03/-0	1.00 25.4	.03 .8	.50 12.7	1.66 42.1	Cylindrical 12 305	N/A	N/A	N/A	See Load-Speed Chart	
BCFE 1 S BCFE 1 SB BCCFE 1 S BCCFE 1 SB	1.000 25.40	+0/-.001 +0/-.03	.625 15.88	+0 / -.005 +0 / -.13	.4375 11.11	+.001/-0 +.03/-0	1.00 25.4	.03 .8	.50 12.7	1.66 42.1	Cylindrical 12 305	.030 .76	.50 12.7	.63 15.9	See Load-Speed Chart	
BCF 1 1/8 S BCF 1 1/8 SB BCCF 1 1/8 S BCCF 1 1/8 SB	1.125 28.58	+0/-.001 +0/-.03	.625 15.88	+0 / -.005 +0 / -.13	.4375 11.11	+.001/-0 +.03/-0	1.00 25.4	.03 .8	.50 12.7	1.66 42.1	Cylindrical 12 305	N/A	N/A	N/A	See Load-Speed Chart	
BCFE 1 1/8 S BCFE 1 1/8 SB BCCFE 1 1/8 S BCCFE 1 1/8 SB	1.125 28.58	+0/-.001 +0/-.03	.625 15.88	+0 / -.005 +0 / -.13	.4375 11.11	+.001/-0 +.03/-0	1.00 25.4	.03 .8	.50 12.7	1.66 42.1	Cylindrical 12 305	.030 .76	.50 12.7	.63 15.9	See Load-Speed Chart	

Metric dimensions for reference only.
Not all parts are available from stock. Please contact customer service for availability (800) 626-2120.
For more information on bearing capabilities outside of our standard offering, please contact Application Engineering (800) 626-2093.

Inch Cam Follower Bearings

McGILL®

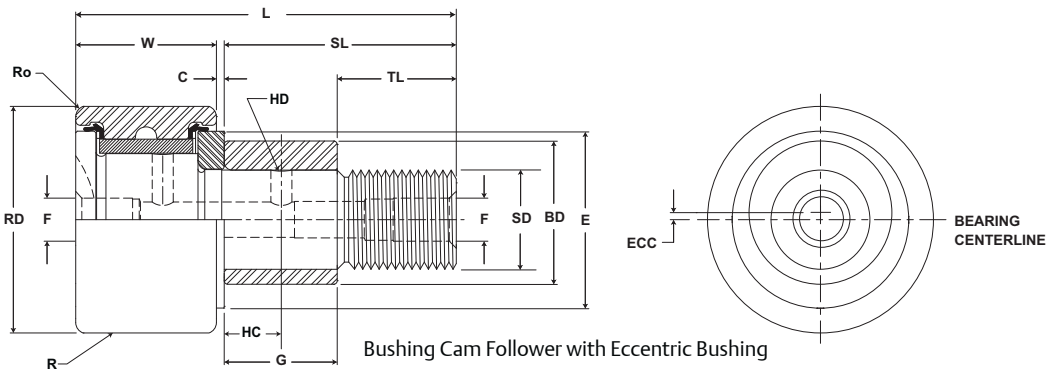

Bushing Cam Follower with Eccentric Bushing

BCF, BCFE

Part No. With LUBRI-DISC Seals	HC Hole Center inch mm (Ref)	HD Radial Hole Diameter inch mm (Ref)	F Axial Hole Dia or Fitting inch mm (Ref)	H Hex Hole inch mm (Ref)	E Min Boss Diameter inch mm (Ref)	Ro Outer Corner Radius inch mm (Ref)	Housing Bore Diameter inch mm Nom.	Housing Bore Diameter inch mm Tol.	Thread Type	Clamping Torque in-lb Nm	Limiting Speed RPM	WT Bearing Weight lb kg
BCF 3/4 S BCF 3/4 SB BCCF 3/4 S BCCF 3/4 SB	.25 6.4	.09 2.4	.1875 4.76	.1875 4.76	.61 15.5	.02 .4 N/A	.3753 9.533	+.0002/-.0003 +.0005/-.0008	3/8-24	95 11	See Load-Speed Chart	.07 .03
BCFE 3/4 S BCFE 3/4 SB BCCFE 3/4 S BCCFE 3/4 SB	.25 6.4	.09 2.4	.1875 4.76	.1875 4.76	.61 15.5	.02 .4 N/A	.503 12.77	+.001/-.001 +.025/-.025	3/8-24	95 11	See Load-Speed Chart	.07 .03
BCF 7/8 S BCF 7/8 SB BCCF 7/8 S BCCF 7/8 SB	.25 6.4	.09 2.4	.1875 4.76	.1875 4.76	.61 15.5	.02 .4 N/A	.3753 9.533	+.0002/-.0003 +.0005/-.0008	3/8-24	95 11	See Load-Speed Chart	.09 .04
BCFE 7/8 S BCFE 7/8 SB BCCFE 7/8 S BCCFE 7/8 SB	.25 6.4	.09 2.4	.1875 4.76	.1875 4.76	.61 15.5	.02 .4 N/A	.503 12.77	+.001/-.001 +.025/-.025	3/8-24	95 11	See Load-Speed Chart	.09 .04
BCF 1 S BCF 1 SB BCCF 1 S BCCF 1 SB	.25 6.4	.09 2.4	.1875 4.76	.25 6.4	.78 19.8	.03 .8 N/A	.4378 11.120	+.0002/-.0003 +.0005/-.0008	7/16-20	250 28	See Load-Speed Chart	.17 .08
BCFE 1 S BCFE 1 SB BCCFE 1 S BCCFE 1 SB	.25 6.4	.09 2.4	.1875 4.76	.25 6.4	.78 19.8	.03 .8 N/A	.628 15.95	+.001/-.001 +.025/-.025	7/16-20	250 28	See Load-Speed Chart	.17 .08
BCF 1 1/8 S BCF 1 1/8 SB BCCF 1 1/8 S BCCF 1 1/8 SB	.25 6.4	.09 2.4	.1875 4.76	.25 6.4	.78 19.8	.03 .8 N/A	.4378 11.120	+.0002/-.0003 +.0005/-.0008	7/16-20	250 28	See Load-Speed Chart	.19 .09
BCFE 1 1/8 S BCFE 1 1/8 SB BCCFE 1 1/8 S BCCFE 1 1/8 SB	.25 6.4	.09 2.4	.1875 4.76	.25 6.4	.78 19.8	.03 .8 N/A	.628 15.95	+.001/-.001 +.025/-.025	7/16-20	250 28	See Load-Speed Chart	.19 .09

Metric dimensions for reference only.
Clamping torque is based on dry threads. If threads are lubricated, use half of value shown.

McGILL® Inch Cam Follower Bearings

Basic Construction Type: Stud Type Crowned / Cylindrical Outside Diameter

Rolling Elements: Non-Metallic Bushing

Bearing Material: Bearing Quality Steel

Seal Type: LUBRI-DISC®

Lubrication: None - Self Lubricating Bushing

System Configuration: Concentric / Eccentric

Mounting Feature: Slot / Hex Hole

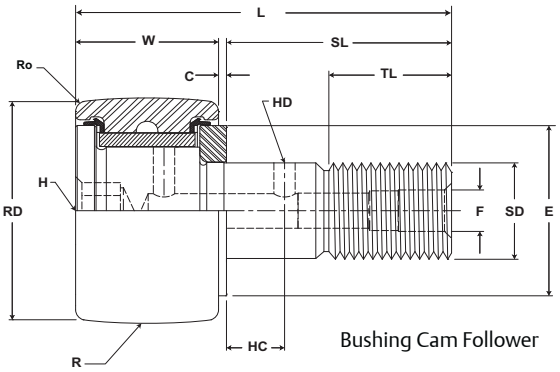

Bushing Cam Follower

BCF, BCFE

Part No.	RD		W		SD		SL	C	TL	L	R	ECC	G	BD	Track Roller Dynamic Rating	Track Roller Static Rating
With LUBRI-DISC Seals	Roller Diameter		Roller Width		Stud Diameter		Stud Length	Endplate Extension	Minimum Thread Length	Length Overall	Crown Prefix BCCF-XX	Eccentric Base Modifier BCFE-XX				
	inch mm		inch mm		inch mm		inch mm		inch mm		inch mm	inch mm			N/lb	N/lb
	Nom.	Tol.	Nom.	Tol.	Nom.	Tol.	(Ref)	(Ref)	(Ref)	(Ref)	Radius	(Ref)	+0/-.001 (+0/-.03)	± .001 (± .03)		
BCF 1 1/4 S BCF 1 1/4 SB BCCF 1 1/4 S BCCF 1 1/4 SB	1.250 31.75	+0/-.001 +0/-.03	.750 19.05	+0 / -.005 +0 / -.13	.500 12.70	+.001/-0 +.03/-0	1.25 31.8	.03 .8	.63 15.9	2.03 51.6	Cylindrical 14 356	N/A	N/A	N/A	See Load-Speed Chart	
BCFE 1 1/4 S BCFE 1 1/4 SB BCCFE 1 1/4 S BCCFE 1 1/4 SB	1.250 31.75	+0/-.001 +0/-.03	.750 19.05	+0 / -.005 +0 / -.13	.500 12.70	+.001/-0 +.03/-0	1.25 31.8	.03 .8	.63 15.9	2.03 51.6	Cylindrical 14 356	.030 .76	.63 15.9	.69 17.4	See Load-Speed Chart	
BCF 1 3/8 S BCF 1 3/8 SB BCCF 1 3/8 S BCCF 1 3/8 SB	1.375 34.93	+0/-.001 +0/-.03	.750 19.05	+0 / -.005 +0 / -.13	.500 12.70	+.001/-0 +.03/-0	1.25 31.8	.03 .8	.63 15.9	2.03 51.6	Cylindrical 14 356	N/A	N/A	N/A	See Load-Speed Chart	
BCFE 1 3/8 S BCFE 1 3/8 SB BCCFE 1 3/8 S BCCFE 1 3/8 SB	1.375 34.93	+0/-.001 +0/-.03	.750 19.05	+0 / -.005 +0 / -.13	.500 12.70	+.001/-0 +.03/-0	1.25 31.8	.03 .8	.63 15.9	2.03 51.6	Cylindrical 14 356	.030 .76	.63 15.9	.69 17.4	See Load-Speed Chart	
BCF 1 1/2 S BCF 1 1/2 SB BCCF 1 1/2 S BCCF 1 1/2 SB	1.500 38.10	+0/-.001 +0/-.03	.875 22.23	+0 / -.005 +0 / -.13	.625 15.88	+.001/-0 +.03/-0	1.50 38.1	.03 .8	.75 19.1	2.41 61.1	Cylindrical 20 508	N/A	N/A	N/A	See Load-Speed Chart	
BCFE 1 1/2 S BCFE 1 1/2 SB BCCFE 1 1/2 S BCCFE 1 1/2 SB	1.500 38.10	+0/-.001 +0/-.03	.875 22.23	+0 / -.005 +0 / -.13	.625 15.88	+.001/-0 +.03/-0	1.50 38.1	.03 .8	.75 19.1	2.41 61.1	Cylindrical 20 508	.030 .76	.75 19.1	.88 22.2	See Load-Speed Chart	
BCF 1 5/8 S BCF 1 5/8 SB BCCF 1 5/8 S BCCF 1 5/8 SB	1.625 41.28	+0/-.001 +0/-.03	.875 22.23	+0 / -.005 +0 / -.13	.625 15.88	+.001/-0 +.03/-0	1.50 38.1	.03 .8	.75 19.1	2.41 61.1	Cylindrical 20 508	N/A	N/A	N/A	See Load-Speed Chart	
BCFE 1 5/8 S BCFE 1 5/8 SB BCCFE 1 5/8 S BCCFE 1 5/8 SB	1.625 41.28	+0/-.001 +0/-.03	.875 22.23	+0 / -.005 +0 / -.13	.625 15.88	+.001/-0 +.03/-0	1.50 38.1	.03 .8	.75 19.1	2.41 61.1	Cylindrical 20 508	.030 .76	.75 19.1	.88 22.2	See Load-Speed Chart	

Metric dimensions for reference only.
Not all parts are available from stock. Please contact customer service for availability (800) 626-2120.
For more information on bearing capabilities outside of our standard offering, please contact Application Engineering (800) 626-2093.

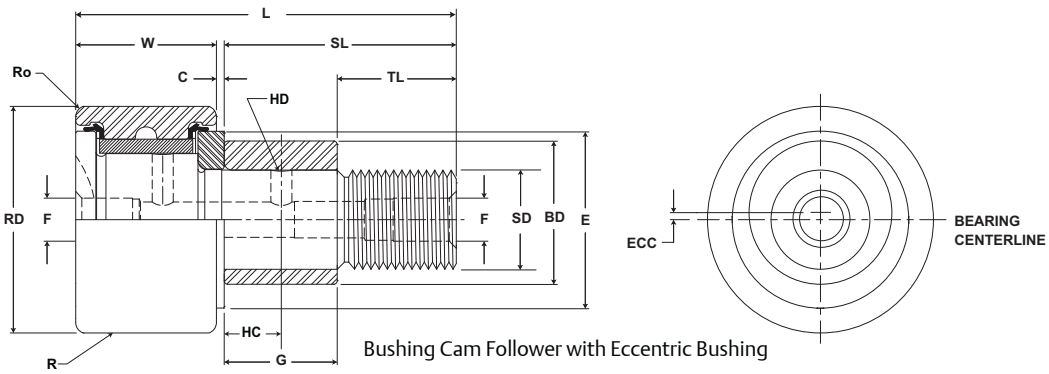

Bushing Cam Follower with Eccentric Bushing

BCF, BCFE

Part No. With LUBRI-DISC Seals	HC Hole Center (Ref)	HD Radial Hole Diameter (Ref)	F Axial Hole Dia or Fitting (Ref)	H Hex Hole (Ref)	E Min Boss Diameter (Ref)	Ro Outer Corner Radius (Ref)	Housing Bore Diameter Nom.	Housing Bore Diameter Tol.	Thread Type	Clamping Torque in-lb / Nm	Limiting Speed RPM	WT Bearing Weight lb / kg
	inch / mm	inch / mm	inch / mm	inch / mm	inch / mm	inch / mm	inch / mm	inch / mm				
BCF 1 1/4 S BCF 1 1/4 SB BCCF 1 1/4 S BCCF 1 1/4 SB	.31 7.9	.09 2.4	.1875 4.76	.25 6.4	.98 25.0	.03 .8 N/A	.5003 12.708	+.0002/-.0003 +.0005/-.0008	1/2-20	350 40	See Load-Speed Chart	.30 .14
BCFE 1 1/4 S BCFE 1 1/4 SB BCCFE 1 1/4 S BCCFE 1 1/4 SB	.31 7.9	.09 2.4	.1875 4.76	.25 6.4	.98 25.0	.03 .8 N/A	.690 17.52	+.001/-.001 +.025/-.025	1/2-20	350 40	See Load-Speed Chart	.30 .14
BCF 1 3/8 S BCF 1 3/8 SB BCCF 1 3/8 S BCCF 1 3/8 SB	.31 7.9	.09 2.4	.1875 4.76	.25 6.4	.98 25.0	.05 1.2 N/A	.5003 12.708	+.0002/-.0003 +.0005/-.0008	1/2-20	350 40	See Load-Speed Chart	.35 .16
BCFE 1 3/8 S BCFE 1 3/8 SB BCCFE 1 3/8 S BCCFE 1 3/8 SB	.31 7.9	.09 2.4	.1875 4.76	.25 6.4	.98 25.0	.05 1.2 N/A	.690 17.52	+.001/-.001 +.025/-.025	1/2-20	350 40	See Load-Speed Chart	.35 .16
BCF 1 1/2 S BCF 1 1/2 SB BCCF 1 1/2 S BCCF 1 1/2 SB	.38 9.5	.09 2.4	.1875 4.76	.31 7.9	1.09 27.8	.06 1.6 N/A	.6253 15.883	+.0002/-.0003 +.0005/-.0008	5/8-18	650 73	See Load-Speed Chart	.53 .24
BCFE 1 1/2 S BCFE 1 1/2 SB BCCFE 1 1/2 S BCCFE 1 1/2 SB	.38 9.5	.09 2.4	.1875 4.76	.31 7.9	1.09 27.8	.06 1.6 N/A	.878 22.30	+.001/-.001 +.025/-.025	5/8-18	650 73	See Load-Speed Chart	.53 .24
BCF 1 5/8 S BCF 1 5/8 SB BCCF 1 5/8 S BCCF 1 5/8 SB	.38 9.5	.09 2.4	.1875 4.76	.31 7.9	1.09 27.8	.06 1.6 N/A	.6253 15.883	+.0002/-.0003 +.0005/-.0008	5/8-18	650 73	See Load-Speed Chart	.60 .27
BCFE 1 5/8 S BCFE 1 5/8 SB BCCFE 1 5/8 S BCCFE 1 5/8 SB	.38 9.5	.09 2.4	.1875 4.76	.31 7.9	1.09 27.8	.06 1.6 N/A	.878 22.30	+.001/-.001 +.025/-.025	5/8-18	650 73	See Load-Speed Chart	.60 .27

McGILL® Inch Cam Follower Bearings

Basic Construction Type: Stud Type Crowned / Cylindrical Outside Diameter

Rolling Elements: Non-Metallic Bushing

Bearing Material: Bearing Quality Steel

Seal Type: LUBRI-DISC®

Lubrication: None - Self Lubricating Bushing

System Configuration: Concentric / Eccentric

Mounting Feature: Slot / Hex Hole

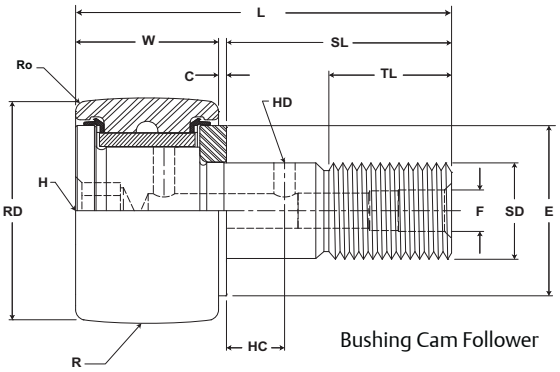

Bushing Cam Follower

BCF, BCFE

Part No. With LUBRI-DISC Seals	RD Roller Diameter inch mm Nom.	RD Roller Diameter inch mm Tol.	W Roller Width inch mm Nom.	W Roller Width inch mm Tol.	SD Stud Diameter inch mm Nom.	SD Stud Diameter inch mm Tol.	SL Stud Length inch mm (Ref)	C Endplate Extension inch mm (Ref)	TL Minimum Thread Length inch mm (Ref)	L Length Overall inch mm (Ref)	R Crown Prefix BCCF-XX inch mm Radius	ECC Eccentric Base Modifier BCFE-XX inch mm (Ref)	G Eccentric Base Modifier BCFE-XX inch mm +0/-.001 (+0/-.03)	BD Eccentric Base Modifier BCFE-XX inch mm ± .001 (± .03)	Track Roller Dynamic Rating N/lb	Track Roller Static Rating N/lb
BCF 1 3/4 S BCF 1 3/4 SB BCCF 1 3/4 S BCCF 1 3/4 SB	1.750 44.45	+0/-.001 +0/-.03	1.000 25.40	0 / -.005 +0 / -.13	.750 19.05	+.001/-0 +.03/-0	1.75 44.5	.03 .8	.88 22.2	2.78 70.6	Cylindrical 20 508	N/A	N/A	N/A	See Load-Speed Chart	
BCFE 1 3/4 S BCFE 1 3/4 SB BCCFE 1 3/4 S BCCFE 1 3/4 SB	1.750 44.45	+0/-.001 +0/-.03	1.000 25.40	0 / -.005 +0 / -.13	.750 19.05	+.001/-0 +.03/-0	1.75 44.5	.03 .8	.88 22.2	2.78 70.6	Cylindrical 20 508	.030 .76	.88 22.2	.00 25.4	See Load-Speed Chart	
BCF 1 7/8 S BCF 1 7/8 SB BCCF 1 7/8 S BCCF 1 7/8 SB	1.875 47.63	+0/-.001 +0/-.03	1.000 25.40	0 / -.005 +0 / -.13	.750 19.05	+.001/-0 +.03/-0	1.75 44.5	.03 .8	.88 22.2	2.78 70.6	Cylindrical 20 508	N/A	N/A	N/A	See Load-Speed Chart	
BCFE 1 7/8 S BCFE 1 7/8 SB BCCFE 1 7/8 S BCCFE 1 7/8 SB	1.875 47.63	+0/-.001 +0/-.03	1.000 25.40	0 / -.005 +0 / -.13	.750 19.05	+.001/-0 +.03/-0	1.75 44.5	.03 .8	.88 22.2	2.78 70.6	Cylindrical 20 508	.030 .76	.88 22.2	.00 25.4	See Load-Speed Chart	
BCF 2 S BCF 2 SB BCCF 2 S BCCF 2 SB	2.000 50.80	+0/-.001 +0/-.03	1.250 31.75	0 / -.005 +0 / -.13	.875 22.23	+.001/-0 +.03/-0	2.00 50.8	.03 .8	2.00 50.8	3.28 83.3	Cylindrical 24 610	N/A	N/A	N/A	See Load-Speed Chart	
BCFE 2 S BCFE 2 SB BCCFE 2 S BCCFE 2 SB	2.000 50.80	+0/-.001 +0/-.03	1.250 31.75	0 / -.005 +0 / -.13	.875 22.23	+.001/-0 +.03/-0	2.00 50.8	.03 .8	2.00 50.8	3.28 83.3	Cylindrical 24 610	.030 .76	.00 25.4	.19 30.1	See Load-Speed Chart	
BCF 2 1/4 S BCF 2 1/4 SB BCCF 2 1/4 S BCCF 2 1/4 SB	2.250 57.15	+0/-.001 +0/-.03	1.250 31.75	0 / -.005 +0 / -.13	.875 22.23	+.001/-0 +.03/-0	2.00 50.8	.03 .8	2.00 50.8	3.28 83.3	Cylindrical 24 610	N/A	N/A	N/A	See Load-Speed Chart	
BCFE 2 1/4 S BCFE 2 1/4 SB BCCFE 2 1/4 S BCCFE 2 1/4 SB	2.250 57.15	+0/-.001 +0/-.03	1.250 31.75	0 / -.005 +0 / -.13	.875 22.23	+.001/-0 +.03/-0	2.00 50.8	.03 .8	2.00 50.8	3.28 83.3	Cylindrical 24 610	.030 .76	.00 25.4	.19 30.1	See Load-Speed Chart	

Metric dimensions for reference only.
Not all parts are available from stock. Please contact customer service for availability (800) 626-2120.
For more information on bearing capabilities outside of our standard offering, please contact Application Engineering (800) 626-2093.

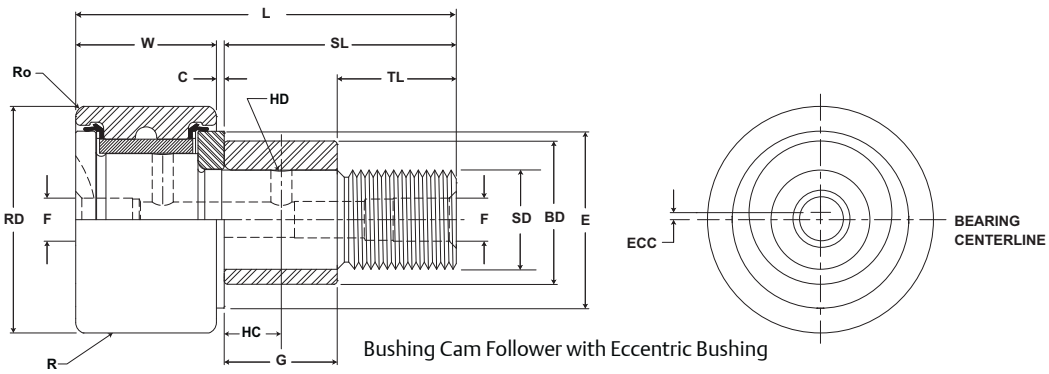

Bushing Cam Follower with Eccentric Bushing

BCF, BCFE

Part No. With LUBRI-DISC Seals	HC Hole Center (Ref) inch / mm	HD Radial Hole Diameter (Ref) inch / mm	F Axial Hole Dia or Fitting (Ref) inch / mm	H Hex Hole (Ref) inch / mm	E Min Boss Diameter (Ref) inch / mm	Ro Outer Corner Radius (Ref) inch / mm	Housing Bore Diameter Nom. inch / mm	Housing Bore Diameter Tol. inch / mm	Thread Type	Clamping Torque in-lb / Nm	Limiting Speed RPM	WT Bearing Weight lb / kg
BCF 1 3/4 S BCF 1 3/4 SB BCCF 1 3/4 S BCCF 1 3/4 SB	.44 11.1	.125 3	.1875 4.76	.31 7.9	1.25 31.8	.06 1.6 N/A	.7503 19.058	+.0002/-.0003 +.0005/-.0008	3/4-16	1,250 141	See Load-Speed Chart	.84 .38
BCFE 1 3/4 S BCFE 1 3/4 SB BCCFE 1 3/4 S BCCFE 1 3/4 SB	.44 11.1	.125 3	.1875 4.76	.31 7.9	1.25 31.8	.06 1.6 N/A	1.003 25.47	+.001/-.001 +.025/-.025	3/4-16	1,250 141	See Load-Speed Chart	.84 .38
BCF 1 7/8 S BCF 1 7/8 SB BCCF 1 7/8 S BCCF 1 7/8 SB	.44 11.1	.125 3	.1875 4.76	.31 7.9	1.25 31.8	.06 1.6 N/A	.7503 19.058	+.0002/-.0003 +.0005/-.0008	3/4-16	1,250 141	See Load-Speed Chart	.95 .43
BCFE 1 7/8 S BCFE 1 7/8 SB BCCFE 1 7/8 S BCCFE 1 7/8 SB	.44 11.1	.125 3	.1875 4.76	.31 7.9	1.25 31.8	.06 1.6 N/A	1.003 25.47	+.001/-.001 +.025/-.025	3/4-16	1,250 141	See Load-Speed Chart	.95 .43
BCF 2 S BCF 2 SB BCCF 2 S BCCF 2 SB	.50 12.7	.125 3	.1875 4.76	.44 11.1	1.41 35.7	.09 2.4 N/A	.8753 22.233	+.0002/-.0003 +.0005/-.0008	7/8-14	1,500 170	See Load-Speed Chart	1.36 .62
BCFE 2 S BCFE 2 SB BCCFE 2 S BCCFE 2 SB	.50 12.7	.125 3	.1875 4.76	.44 11.1	1.41 35.7	.09 2.4 N/A	1.190 30.22	+.001/-.001 +.025/-.025	7/8-14	1,500 170	See Load-Speed Chart	1.36 .62
BCF 2 1/4 S BCF 2 1/4 SB BCCF 2 1/4 S BCCF 2 1/4 SB	.50 12.7	.125 3	.1875 4.76	.44 11.1	1.41 35.7	.09 2.4 N/A	.8753 22.233	+.0002/-.0003 +.0005/-.0008	7/8-14	1,500 170	See Load-Speed Chart	1.65 .75
BCFE 2 1/4 S BCFE 2 1/4 SB BCCFE 2 1/4 S BCCFE 2 1/4 SB	.50 12.7	.125 3	.1875 4.76	.44 11.1	1.41 35.7	.09 2.4 N/A	.8753 22.233	+.001/-.001 +.025/-.025	7/8-14	1,500 170	See Load-Speed Chart	1.65 .75

McGILL® Inch Cam Follower Bearings

Basic Construction Type: Stud Type Crowned / Cylindrical Outside Diameter

Rolling Elements: Non-Metallic Bushing

Bearing Material: Bearing Quality Steel

Seal Type: LUBRI-DISC®

Lubrication: None - Self Lubricating Bushing

System Configuration: Concentric / Eccentric

Mounting Feature: Slot / Hex Hole

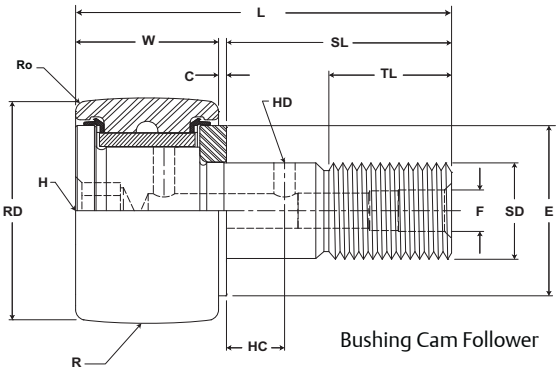

Bushing Cam Follower

BCF, BCFE

Part No. With LUBRI-DISC Seals	RD Roller Diameter inch mm Nom.	RD Roller Diameter inch mm Tol.	W Roller Width inch mm Nom.	W Roller Width inch mm Tol.	SD Stud Diameter inch mm Nom.	SD Stud Diameter inch mm Tol.	SL Stud Length inch mm (Ref)	C Endplate Extension inch mm (Ref)	TL Minimum Thread Length inch mm (Ref)	L Length Overall inch mm (Ref)	R Crown Prefix BCCF-XX / Base Modifier BCFE-XX inch mm Radius	ECC Eccentric inch mm (Ref)	G Eccentric inch mm +0/-.001 (+0/-.03)	BD Eccentric inch mm ± .001 (± .03)	Track Roller Dynamic Rating N/lb	Track Roller Static Rating N/lb
BCF 2 1/2 S BCF 2 1/2 SB BCCF 2 1/2 S BCCF 2 1/2 SB	2.500 63.50	+0/-.001 +0/-.03	1.500 38.10	+0 / -.005 +0 / -.13	1.000 25.40	+.001/-0 +.03/-0	2.25 57.2	.03 .8	2.25 57.2	3.78 96.0	Cylindrical 30 762	N/A	N/A	N/A	See Load-Speed Chart	
BCFE 2 1/2 S BCFE 2 1/2 SB BCCFE 2 1/2 S BCCFE 2 1/2 SB	2.500 63.50	+0/-.001 +0/-.03	1.500 38.10	+0 / -.005 +0 / -.13	1.000 25.40	+.001/-0 +.03/-0	2.25 57.2	.03 .8	2.25 57.2	3.78 96.0	Cylindrical 30 762	.030 .76	.13 28.6	.38 34.9	See Load-Speed Chart	
BCF 2 3/4 S BCF 2 3/4 SB BCCF 2 3/4 S BCCF 2 3/4 SB	2.750 69.85	+0/-.001 +0/-.03	1.500 38.10	+0 / -.005 +0 / -.13	1.000 25.40	+.001/-0 +.03/-0	2.25 57.2	.03 .8	2.25 57.2	3.78 96.0	Cylindrical 30 762	N/A	N/A	N/A	See Load-Speed Chart	
BCFE 2 3/4 S BCFE 2 3/4 SB BCCFE 2 3/4 S BCCFE 2 3/4 SB	2.750 69.85	+0/-.001 +0/-.03	1.500 38.10	+0 / -.005 +0 / -.13	1.000 25.40	+.001/-0 +.03/-0	2.25 57.2	.03 .8	2.25 57.2	3.78 96.0	Cylindrical 30 762	.030 .76	.13 28.6	.38 34.9	See Load-Speed Chart	
BCF 3 S BCF 3 SB BCCF 3 S BCCF 3 SB	3.000 76.20	+0/-.001 +0/-.03	1.750 44.45	+0 / -.005 +0 / -.13	1.250 31.75	+.001/-0 +.03/-0	2.50 63.5	.03 .8	2.50 63.5	4.28 108.7	Cylindrical 30 762	N/A	N/A	N/A	See Load-Speed Chart	
BCFE 3 S BCFE 3 SB BCCFE 3 S BCCFE 3 SB	3.000 76.20	+0/-.001 +0/-.03	1.750 44.45	+0 / -.005 +0 / -.13	1.250 31.75	+.001/-0 +.03/-0	2.50 63.5	.03 .8	2.50 63.5	4.28 108.7	Cylindrical 30 762	.060 .52	.25 31.8	.75 44.5	See Load-Speed Chart	
BCF 3 1/4 S BCF 3 1/4 SB BCCF 3 1/4 S BCCF 3 1/4 SB	3.250 82.55	+0/-.001 +0/-.03	1.750 44.45	+0 / -.005 +0 / -.13	1.250 31.75	+.001/-0 +.03/-0	2.50 63.5	.03 .8	2.50 63.5	4.28 108.7	Cylindrical 30 762	N/A	N/A	N/A	See Load-Speed Chart	
BCFE 3 1/4 S BCFE 3 1/4 SB BCCFE 3 1/4 S BCCFE 3 1/4 SB	3.250 82.55	+0/-.001 +0/-.03	1.750 44.45	+0 / -.005 +0 / -.13	1.250 31.75	+.001/-0 +.03/-0	2.50 63.5	.03 .8	2.50 63.5	4.28 108.7	Cylindrical 30 762	.060 .52	.25 31.8	.75 44.5	See Load-Speed Chart	

Metric dimensions for reference only.
Not all parts are available from stock. Please contact customer service for availability (800) 626-2120.
For more information on bearing capabilities outside of our standard offering, please contact Application Engineering (800) 626-2093.

Inch Cam Follower Bearings

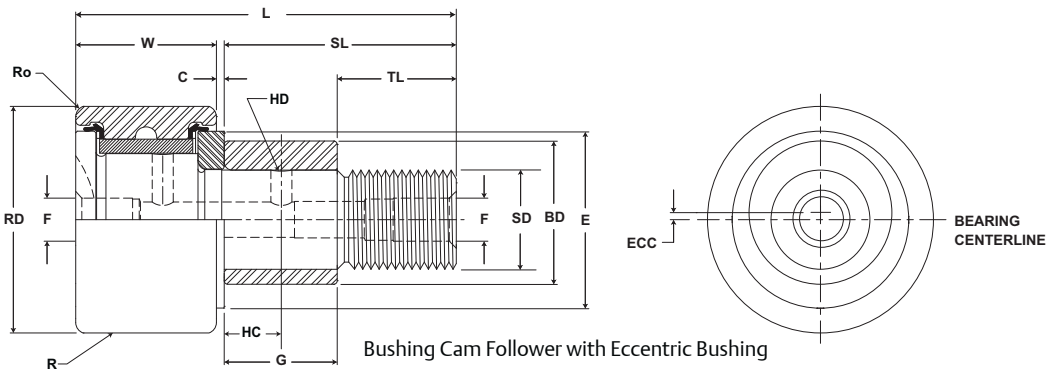

Bushing Cam Follower with Eccentric Bushing

BCF, BCFE

Part No. With LUBRI-DISC Seals	HC Hole Center inch mm (Ref)	HD Radial Hole Diameter inch mm (Ref)	F Axial Hole Dia or Fitting inch mm (Ref)	H Hex Hole inch mm (Ref)	E Min Boss Diameter inch mm (Ref)	Ro Outer Corner Radius inch mm (Ref)	Housing Bore Diameter inch mm Nom.	Housing Bore Diameter inch mm Tol.	Thread Type	Clamping Torque in-lb Nm	Limiting Speed RPM	WT Bearing Weight lb kg
BCF 2 1/2 S BCF 2 1/2 SB BCCF 2 1/2 S BCCF 2 1/2 SB	.56 14.3	.125 3	.1875 4.76	.50 12.7	1.69 42.9	.09 2.4 N/A	1.0003 25.408	+.0002/-.0003 +.0005/-.0008	1-14	2,250 254	See Load-Speed Chart	2.50 1.13
BCFE 2 1/2 S BCFE 2 1/2 SB BCCFE 2 1/2 S BCCFE 2 1/2 SB	.56 14.3	.125 3	.1875 4.76	.50 12.7	1.69 42.9	.09 2.4 N/A	1.378 35.00	+.001/-.001 +.025/-.025	1-14	2,250 254	See Load-Speed Chart	2.50 1.13
BCF 2 3/4 S BCF 2 3/4 SB BCCF 2 3/4 S BCCF 2 3/4 SB	.56 14.3	.125 3	.1875 4.76	.50 12.7	1.69 42.9	.09 2.4 N/A	1.0003 25.408	+.0002/-.0003 +.0005/-.0008	1-14	2,250 254	See Load-Speed Chart	2.93 1.33
BCFE 2 3/4 S BCFE 2 3/4 SB BCCFE 2 3/4 S BCCFE 2 3/4 SB	.56 14.3	.125 3	.1875 4.76	.50 12.7	1.69 42.9	.09 2.4 N/A	1.378 35.00	+.001/-.001 +.025/-.025	1-14	2,250 254	See Load-Speed Chart	2.93 1.33
BCF 3 S BCF 3 SB BCCF 3 S BCCF 3 SB	.63 15.9	.125 3	.25 6.4	.75 19.1	2.13 54.0	.13 3.2 N/A	1.2503 31.758	+.0002/-.0003 +.0005/-.0008	1 1/4-12	3,450 390	See Load-Speed Chart	4.20 1.91
BCFE 3 S BCFE 3 SB BCCFE 3 S BCCFE 3 SB	.63 15.9	.125 3	.25 6.4	.75 19.1	2.13 54.0	.13 3.2 N/A	1.753 44.52	+.001/-.001 +.025/-.025	1 1/4-12	3,450 390	See Load-Speed Chart	4.20 1.91
BCF 3 1/4 S BCF 3 1/4 SB BCCF 3 1/4 S BCCF 3 1/4 SB	.63 15.9	.125 3	.25 6.4	.75 19.1	2.13 54.0	.13 3.2 N/A	1.2503 31.758	+.0002/-.0003 +.0005/-.0008	1 1/4-12	3,450 390	See Load-Speed Chart	4.81 2.18
BCFE 3 1/4 S BCFE 3 1/4 SB BCCFE 3 1/4 S BCCFE 3 1/4 SB	.63 15.9	.125 3	.25 6.4	.75 19.1	2.13 54.0	.13 3.2 N/A	1.753 44.52	+.001/-.001 +.025/-.025	1 1/4-12	3,450 390	See Load-Speed Chart	4.81 2.18

McGILL® Inch Cam Follower Bearings

Basic Construction Type: Stud Type Crowned / Cylindrical Outside Diameter

Rolling Elements: Non-Metallic Bushing

Bearing Material: Bearing Quality Steel

Seal Type: LUBRI-DISC®

Lubrication: None - Self Lubricating Bushing

System Configuration: Concentric / Eccentric

Mounting Feature: Slot / Hex Hole

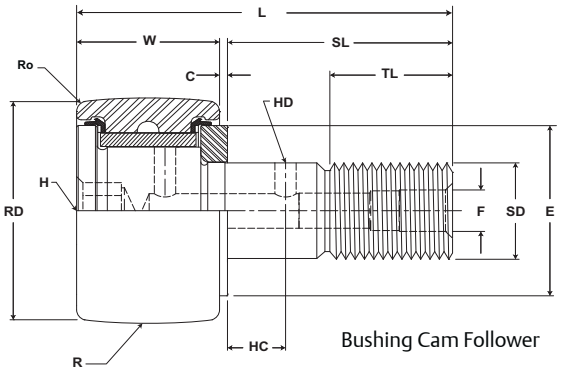

Bushing Cam Follower

BCF, BCFE

Part No.	RD		W		SD		SL	C	TL	L	R	ECC	G	BD	Track Roller Dynamic Rating	Track Roller Static Rating
With LUBRI-DISC Seals	Roller Diameter		Roller Width		Stud Diameter		Stud Length	Endplate Extension	Minimum Thread Length	Length Overall	Crown Prefix BCCF-XX	Eccentric Base Modifier BCFE-XX				
	inch mm		inch mm		inch mm		inch mm		inch mm		inch mm	inch mm			N/lb	N/lb
	Nom.	Tol.	Nom.	Tol.	Nom.	Tol.	(Ref)	(Ref)	(Ref)	(Ref)	Radius	(Ref)	+0/-.001 (+0/-.03)	± .001 (± .03)		
BCF 3 1/2 S BCF 3 1/2 SB BCCF 3 1/2 S BCCF 3 1/2 SB	3.500 88.90	+0/-.001 +0/-.03	2.000 50.80	+0 / -.005 +0 / -.13	1.375 34.93	+.001/-0 +.03/-0	2.75 69.9	.03 .8	2.75 69.9	4.78 121.4	Cylindrical 30 762	N/A	N/A	N/A	See Load-Speed Chart	
BCFE 3 1/2 S BCFE 3 1/2 SB BCCFE 3 1/2 S BCCFE 3 1/2 SB	3.500 88.90	+0/-.001 +0/-.03	2.000 50.80	+0 / -.005 +0 / -.13	1.375 34.93	+.001/-0 +.03/-0	2.75 69.9	.03 .8	2.75 69.9	4.78 121.4	Cylindrical 30 762	.060 .52	.38 34.9	.81 46.0	See Load-Speed Chart	
BCF 4 S BCF 4 SB BCCF 4 S BCCF 4 SB	4.000 101.60	+0/-.001 +0/-.03	2.250 57.15	+0 / -.005 +0 / -.13	1.500 38.10	+.001/-0 +.03/-0	3.50 88.9	.03 .8	3.50 88.9	5.78 146.8	Cylindrical 30 762	N/A	N/A	N/A	See Load-Speed Chart	
BCFE 4 S BCFE 4 SB BCCFE 4 S BCCFE 4 SB	4.000 101.60	+0/-.001 +0/-.03	2.250 57.15	+0 / -.005 +0 / -.13	1.500 38.10	+.001/-0 +.03/-0	3.50 88.9	.03 .8	3.50 88.9	5.78 146.8	Cylindrical 30 762	.060 .52	.00 50.8	.00 50.8	See Load-Speed Chart	

Metric dimensions for reference only.
Not all parts are available from stock. Please contact customer service for availability (800) 626-2120.
For more information on bearing capabilities outside of our standard offering, please contact Application Engineering (800) 626-2093.

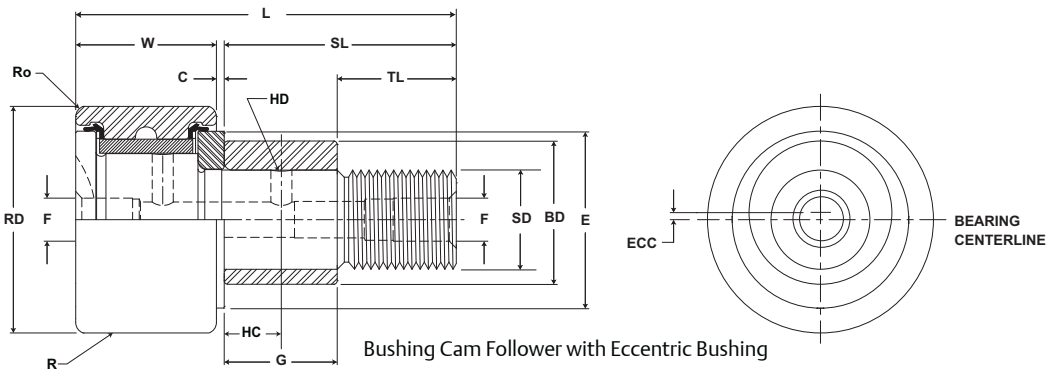

Bushing Cam Follower with Eccentric Bushing

BCF, BCFE

Part No. With LUBRI-DISC Seals	HC Hole Center (Ref) inch mm	HD Radial Hole Diameter (Ref) inch mm	F Axial Hole Dia or Fitting (Ref) inch mm	H Hex Hole (Ref) inch mm	E Min Boss Diameter (Ref) inch mm	Ro Outer Corner Radius (Ref) inch mm	Housing Bore Diameter Nom. inch mm	Housing Bore Diameter Tol. inch mm	Thread Type	Clamping Torque in-lb Nm	Limiting Speed RPM	WT Bearing Weight lb kg
BCF 3 1/2 S BCF 3 1/2 SB BCCF 3 1/2 S BCCF 3 1/2 SB	.69 17.5	.125 3	.25 6.4	.75 19.1	2.44 61.9	.13 3.2 N/A	1.3753 34.933	+.0002/-.0003 +.0005/-.0008	1 3/8-12	4,200 475	See Load-Speed Chart	6.42 2.91
BCFE 3 1/2 S BCFE 3 1/2 SB BCCFE 3 1/2 S BCCFE 3 1/2 SB	.69 17.5	.125 3	.25 6.4	.75 19.1	2.44 61.9	.13 3.2 N/A	1.815 46.10	+.001/-.001 +.025/-.025	1 3/8-12	4,200 475	See Load-Speed Chart	6.42 2.91
BCF 4 S BCF 4 SB BCCF 4 S BCCF 4 SB	.75 19.1	.125 3	.25 6.4	.75 19.1	2.80 71.0	.13 3.2 N/A	1.5003 38.108	+.0002/-.0003 +.0005/-.0008	1 1/2-12	5,000 565	See Load-Speed Chart	9.46 4.29
BCFE 4 S BCFE 4 SB BCCFE 4 S BCCFE 4 SB	.75 19.1	.125 3	.25 6.4	.75 19.1	2.80 71.0	.13 3.2 N/A	2.003 50.85	+.001/-.001 +.025/-.025	1 1/2-12	5,000 565	See Load-Speed Chart	9.46 4.29

McGILL® Inch Cam Follower Bearings

Basic Construction Type: Yoke Type Crowned / Cylindrical Outside Diameter

Rolling Elements: Non-Metallic Bushing

Bearing Material: Bearing Quality Steel

Seal Type: LUBRI-DISC®

Lubrication: None - Self Lubricating Bushing

System Configuration: Concentric / Eccentric / Heavy Stud

Mounting Feature: Slot / Hex Hole

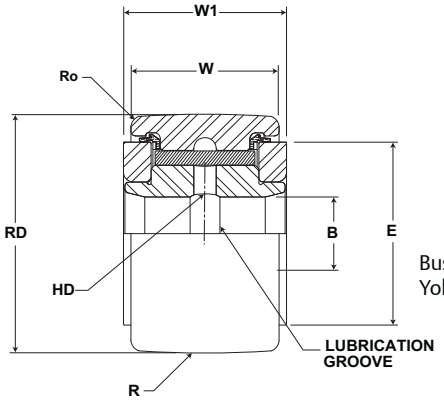

Bushing Cam Yoke Roller

BCYR

Part No.	RD		W		B		W1	R	Track Roller Dynamic Rating	Track Roller Static Rating
With LUBRI-DISC Seals	Roller Diameter		Roller Width		Bore Diameter		Endplate Extension	Crown Prefix BCCYR-XX		
	inch mm		inch mm		inch mm		inch mm		lb/N	lb/N
	Nom.	Tol.	Nom.	Tol.	Nom	Tol	(Ref)	Radius		
BCYR 3/4 S	.750 19.05	+0/-.001 +0/-.03	.500 12.70	+0/-.001 +0/-.03	.250 6.35	+.0002/-.0004 +.0005/-.0010	.56 14.3	Cylindrical	See Load-Speed Chart	
BCCYR 3/4 S								10 254		
BCYR 7/8 S	.875 22.23	+0/-.001 +0/-.03	.500 12.70	+0/-.001 +0/-.03	.250 6.35	+.0002/-.0004 +.0005/-.0010	.56 14.3	Cylindrical	See Load-Speed Chart	
BCCYR 7/8 S								10 254		
BCYR 1 S	1.000 25.40	+0/-.001 +0/-.03	.625 15.88	+0/-.001 +0/-.03	.313 7.94	+.0002/-.0004 +.0005/-.0010	.69 17.5	Cylindrical	See Load-Speed Chart	
BCCYR 1 S								12 305		
BCYR 1 1/8 S	1.125 28.58	+0/-.001 +0/-.03	.625 15.88	+0/-.001 +0/-.03	.313 7.94	+.0002/-.0004 +.0005/-.0010	.69 17.5	Cylindrical	See Load-Speed Chart	
BCCYR 1 1/8 S								12 305		
BCYR 1 1/4 S	1.250 31.75	+0/-.001 +0/-.03	.750 19.05	+0/-.001 +0/-.03	.375 9.53	+.0002/-.0004 +.0005/-.0010	.81 20.6	Cylindrical	See Load-Speed Chart	
BCCYR 1 1/4 S								14 356		
BCYR 1 3/8 S	1.375 34.93	+0/-.001 +0/-.03	.750 19.05	+0/-.001 +0/-.03	.375 9.53	+.0002/-.0004 +.0005/-.0010	.81 20.6	Cylindrical	See Load-Speed Chart	
BCCYR 1 3/8 S								14 356		
BCYR 1 1/2 S	1.500 38.10	+0/-.001 +0/-.03	.875 22.23	+0/-.001 +0/-.03	.438 11.11	+.0002/-.0004 +.0005/-.0010	.94 23.8	Cylindrical	See Load-Speed Chart	
BCCYR 1 1/2 S								20 508		
BCYR 1 5/8 S	1.625 41.28	+0/-.001 +0/-.03	.875 22.23	+0/-.001 +0/-.03	.438 11.11	+.0002/-.0004 +.0005/-.0010	.94 23.8	Cylindrical	See Load-Speed Chart	
BCCYR 1 5/8 S								20 508		
BCYR 1 3/4 S	1.750 44.45	+0/-.001 +0/-.03	1.000 25.40	+0/-.001 +0/-.03	.500 12.70	+.0002/-.0004 +.0005/-.0010	1.06 27.0	Cylindrical	See Load-Speed Chart	
BCCYR 1 3/4 S								20 508		

Metric dimensions for reference only.
Not all parts are available from stock. Please contact customer service for availability (800) 626-2120.
For more information on bearing capabilities outside of our standard offering, please contact Application Engineering (800) 626-2093.

BCYR

Part No.	HC	E	Ro	PF	PFT	PF	PFT	PF	PFT	Limiting Speed	WT
With LUBRI-DISC Seals	Hole Center	Min Boss Diameter	Outer Corner	Recommended Shaft Diameters							Bearing Weight
				Push Fit		Drive Fit		Press Fit			
	inch mm		inch mm	inch mm		inch mm		inch mm		RPM	lb kg
	(Ref)	(Ref)	(Ref)	Nom	Tol	Nom	Tol	Nom	Tol		
BCYR 3/4 S	.25 6.4	.61 15.5	.02 .4	.2495 6.337	±.0002 ±.005	.2495 6.337	±.0002 ±.005	.2495 6.337	±.0002 ±.005	See Load-Speed Chart	.06 .03
BCCYR 3/4 S			N/A								
BCYR 7/8 S	.25 6.4	.61 15.5	.02 .4	.2495 6.337	±.0002 ±.005	.2495 6.337	±.0002 ±.005	.2495 6.337	±.0002 ±.005	See Load-Speed Chart	.08 .04
BCCYR 7/8 S			N/A								
BCYR 1 S	.25 6.4	.78 19.8	.03 .8	.3120 7.925	±.0002 ±.005	.3120 7.925	±.0002 ±.005	.3120 7.925	±.0002 ±.005	See Load-Speed Chart	.15 .07
BCCYR 1 S			N/A								
BCYR 1 1/8 S	.25 6.4	.78 19.8	.03 .8	.3120 7.925	±.0002 ±.005	.3120 7.925	±.0002 ±.005	.3120 7.925	±.0002 ±.005	See Load-Speed Chart	.17 .08
BCCYR 1 1/8 S			N/A								
BCYR 1 1/4 S	.31 7.9	.98 25.0	.03 .8	.3745 9.512	±.0002 ±.005	.3745 9.512	±.0002 ±.005	.3745 9.512	±.0002 ±.005	See Load-Speed Chart	.24 .11
BCCYR 1 1/4 S			N/A								
BCYR 1 3/8 S	.31 7.9	.98 25.0	.05 1.2	.3745 9.512	±.0002 ±.005	.3745 9.512	±.0002 ±.005	.3745 9.512	±.0002 ±.005	See Load-Speed Chart	.30 .14
BCCYR 1 3/8 S			N/A								
BCYR 1 1/2 S	.38 9.5	1.09 27.8	.06 1.6	.4370 11.100	±.0002 ±.005	.4370 11.100	±.0002 ±.005	.4370 11.100	±.0002 ±.005	See Load-Speed Chart	.41 .19
BCCYR 1 1/2 S			N/A								
BCYR 1 5/8 S	.38 9.5	1.09 27.8	.06 1.6	.4370 11.100	±.0002 ±.005	.4370 11.100	±.0002 ±.005	.4370 11.100	±.0002 ±.005	See Load-Speed Chart	.50 .23
BCCYR 1 5/8 S			N/A								
BCYR 1 3/4 S	.44 11.1	1.25 31.8	.06 1.6	.4995 12.687	±.0002 ±.005	.4995 12.687	±.0002 ±.005	.4995 12.687	±.0002 ±.005	See Load-Speed Chart	.64 .29
BCCYR 1 3/4 S			N/A								

McGILL® Inch Cam Follower Bearings

Basic Construction Type: Yoke Type Crowned / Cylindrical Outside Diameter

Rolling Elements: Non-Metallic Bushing

Bearing Material: Bearing Quality Steel

Seal Type: LUBRI-DISC®

Lubrication: None - Self Lubricating Bushing

System Configuration: Concentric / Eccentric / Heavy Stud

Mounting Feature: Slot / Hex Hole

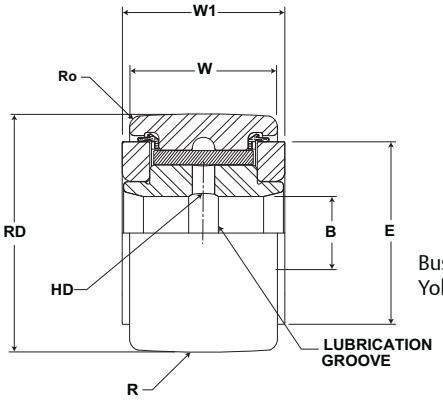

Bushing Cam Yoke Roller

BCYR

Part No.	RD		W		B		W1	R	Track Roller Dynamic Rating	Track Roller Static Rating
With LUBRI-DISC Seals	Roller Diameter		Roller Width		Bore Diameter		Endplate Extension	Crown Prefix BCCYR-XX		
	inch mm		inch mm		inch mm		inch mm		lb/N	lb/N
	Nom.	Tol.	Nom.	Tol.	Nom	Tol	(Ref)	Radius		
BCYR 1 7/8 S	1.875 47.63	+0/-.001 +0/-.03	1.000 25.40	+0/-.001 +0/-.03	.500 12.70	+.0002/-.0004 +.0005/-.0010	1.06 27.0	Cylindrical	See Load-Speed Chart	
BCCYR 1 7/8 S								20 508		
BCYR 2 S	2.000 50.80	+0/-.001 +0/-.03	1.250 31.75	+0/-.001 +0/-.03	.625 15.88	+.0002/-.0004 +.0005/-.0010	1.31 33.3	Cylindrical	See Load-Speed Chart	
BCCYR 2 S								24 610		
BCYR 2 1/4 S	2.250 57.15	+0/-.001 +0/-.03	1.250 31.75	+0/-.001 +0/-.03	.625 15.88	+.0002/-.0004 +.0005/-.0010	1.31 33.3	Cylindrical	See Load-Speed Chart	
BCCYR 2 1/4 S								24 610		
BCYR 2 1/2 S	2.500 63.50	+0/-.001 +0/-.03	1.500 38.10	+0/-.001 +0/-.03	.750 19.05	+.0002/-.0004 +.0005/-.0010	1.56 39.7	Cylindrical	See Load-Speed Chart	
BCCYR 2 1/2 S								30 762		
BCYR 2 3/4 S	2.750 69.85	+0/-.001 +0/-.03	1.500 38.10	+0/-.001 +0/-.03	.750 19.05	+.0002/-.0004 +.0005/-.0010	1.56 39.7	Cylindrical	See Load-Speed Chart	
BCCYR 2 3/4 S								30 762		
BCYR 3 S	3.000 76.20	+0/-.001 +0/-.03	1.750 44.45	+0/-.001 +0/-.03	1.000 25.40	+.0001/-.0005 +.0003/-.0013	1.81 46.0	Cylindrical	See Load-Speed Chart	
BCCYR 3 S								30 762		
BCYR 3 1/4 S	3.250 82.55	+0/-.001 +0/-.03	1.750 44.45	+0/-.001 +0/-.03	1.000 25.40	+.0001/-.0005 +.0003/-.0013	1.81 46.0	Cylindrical	See Load-Speed Chart	
BCCYR 3 1/4 S								30 762		
BCYR 3 1/2 S	3.500 88.90	+0/-.001 +0/-.03	2.000 50.80	+0/-.001 +0/-.03	1.125 28.58	+.0001/-.0005 +.0003/-.0013	2.06 52.4	Cylindrical	See Load-Speed Chart	
BCCYR 3 1/2 S								30 762		
BCYR 4 S	4.000 101.60	+0/-.001 +0/-.03	2.250 57.15	+0/-.001 +0/-.03	1.250 31.75	+.0001/-.0005 +.0003/-.0013	2.06 52.4	Cylindrical	See Load-Speed Chart	
BCCYR 4 S								30 762		

Metric dimensions for reference only.
Not all parts are available from stock. Please contact customer service for availability (800) 626-2120.
For more information on bearing capabilities outside of our standard offering, please contact Application Engineering (800) 626-2093.

BCYR

Part No.	HC	E	Ro	PF	PFT	PF	PFT	PF	PFT	Limiting Speed	WT
With LUBRI-DISC Seals	Hole Center	Min Boss Diameter	Outer Corner	Recommended Shaft Diameters							Bearing Weight
				Push Fit		Drive Fit		Press Fit			
	inch mm		inch mm	inch mm		inch mm		inch mm		RPM	lb kg
	(Ref)	(Ref)	(Ref)	Nom	Tol	Nom	Tol	Nom	Tol		
BCYR 1 7/8 S	.44 11.1	1.25 31.8	.06 1.6	.4995 12.687	±.0002 ±.005	.4995 12.687	±.0002 ±.005	.4995 12.687	±.0002 ±.005	See Load-Speed Chart	.80 .36
BCCYR 1 7/8 S			N/A								
BCYR 2 S	.50 12.7	1.41 35.7	.09 2.4	.6245 15.862	±.0002 ±.005	.6245 15.862	±.0002 ±.005	.6245 15.862	±.0002 ±.005	See Load-Speed Chart	1.05 .48
BCCYR 2 S			N/A								
BCYR 2 1/4 S	.50 12.7	1.41 35.7	.09 2.4	.6245 15.862	±.0002 ±.005	.6245 15.862	±.0002 ±.005	.6245 15.862	±.0002 ±.005	See Load-Speed Chart	1.32 .59
BCCYR 2 1/4 S			N/A								
BCYR 2 1/2 S	.56 14.3	1.69 42.9	.09 2.4	.7495 19.037	±.0002 ±.005	.7495 19.037	±.0002 ±.005	.7495 19.037	±.0002 ±.005	See Load-Speed Chart	1.80 .82
BCCYR 2 1/2 S			N/A								
BCYR 2 3/4 S	.56 14.3	1.69 42.9	.09 2.4	.7495 19.037	±.0002 ±.005	.7495 19.037	±.0002 ±.005	.7495 19.037	±.0002 ±.005	See Load-Speed Chart	2.25 1.02
BCCYR 2 3/4 S			N/A								
BCYR 3 S	.63 15.9	2.13 54.0	.13 3.2	.9994 25.385	±.0002 ±.005	.9994 25.385	±.0002 ±.005	.9994 25.385	±.0002 ±.005	See Load-Speed Chart	3.10 1.41
BCCYR 3 S			N/A								
BCYR 3 1/4 S	.63 15.9	2.13 54.0	.13 3.2	.9994 25.385	±.0002 ±.005	.9994 25.385	±.0002 ±.005	.9994 25.385	±.0002 ±.005	See Load-Speed Chart	3.62 1.64
BCCYR 3 1/4 S			N/A								
BCYR 3 1/2 S	.69 17.5	2.44 61.9	.13 3.2	1.1244 28.560	±.0002 ±.005	1.1244 28.560	±.0002 ±.005	1.1244 28.560	±.0002 ±.005	See Load-Speed Chart	4.95 2.25
BCCYR 3 1/2 S			N/A								
BCYR 4 S	.75 19.1	2.80 71.0	.13 3.2	1.2494 31.735	±.0002 ±.005	1.2494 31.735	±.0002 ±.005	1.2494 31.735	±.0002 ±.005	See Load-Speed Chart	7.05 3.19
BCCYR 4 S			N/A								

McGill Metric Cam Followers

McGill Metric CAMROL bearings are available with either a full complement, or caged (retainer type) set of needles featuring black oxide treated bearing steel while conforming to ISO standard envelope dimensions for use mechanical automation or linear motion applications. Our basic features each contribute to improved performance, while the LUBRI-DISC® seal option helps prevent metal to metal contact within the bearing while providing a barrier for contaminant entry and allow venting of excess or old grease during lubrication. In addition to the seal option these bearings are available with several dimensional choices and combinations to provide a solution specific for the application. Within the following section you can learn more about these features and how they can be applied to your application.

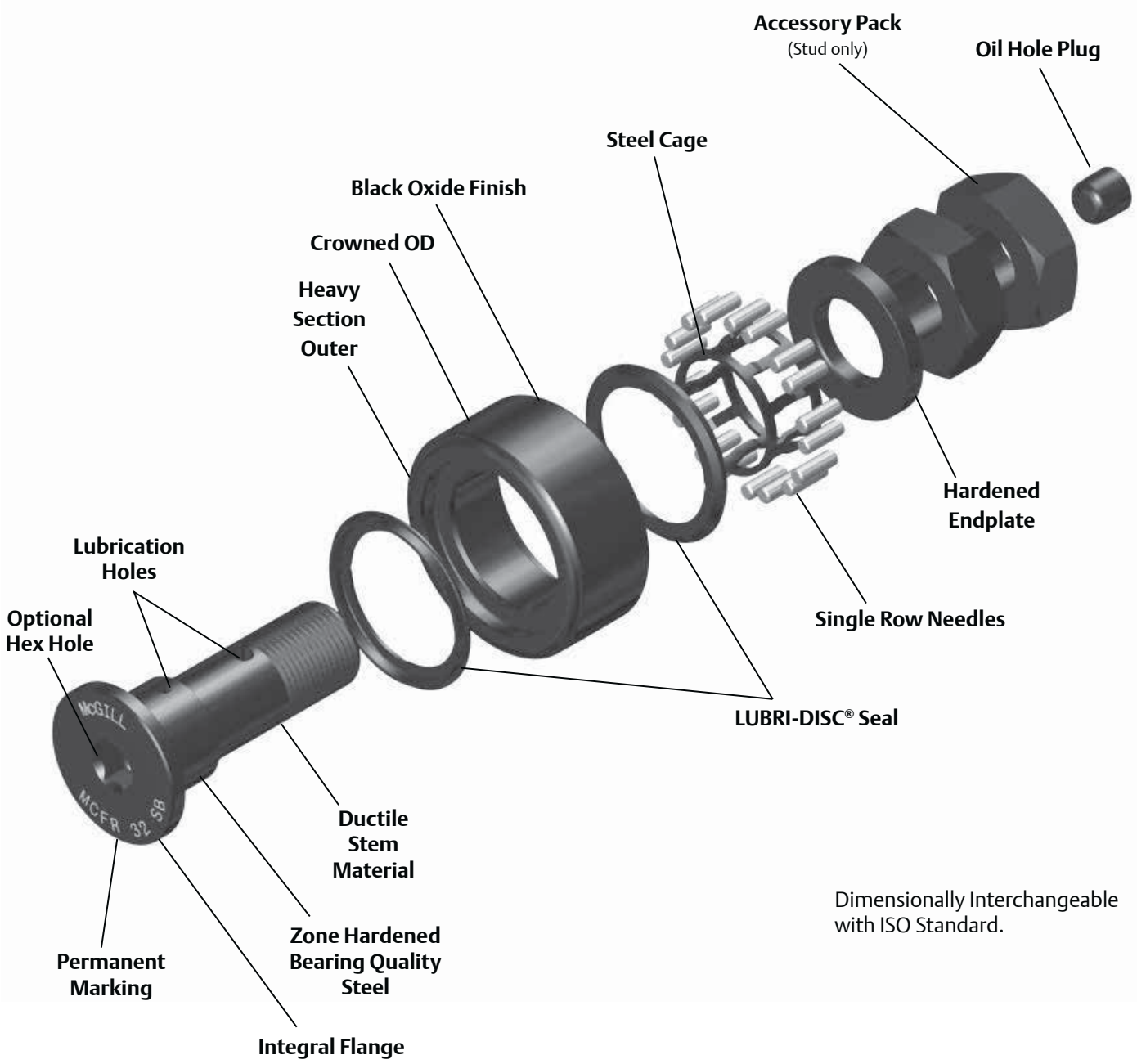

Dimensionally Interchangeable with ISO Standard.

Cam Follower Metric Nomenclature

Basic Type, Construction
- MCF - Metric Cam Follower
- MCYR - Metric Cam Yoke Roller

Construction Suffix
- R - Retained (Caged) Rolling Elements
- E - Eccentric Bushing

Size
- Metric Stud Type: O.D. In mm
- Metric Yoke Type: Bore In mm
- A - Asian Dimensional Standard

Optional Suffix
- S - LUBRI-DISC® Seal
- B - Broach (Hex Hole)
- X - Cylindrical O.D.

MCF R - 35 - B

McGILL® Metric CAMROL Bearings

Features and Benefits

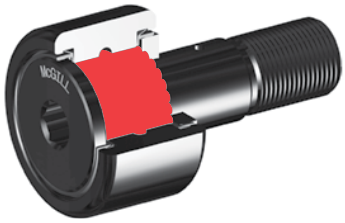

Single Row Full Complement Needle Rollers

The needle roller diameter, length, and number have been optimized to provide a high dynamic and static load rating, contained within industry standard bearing envelope dimensions.

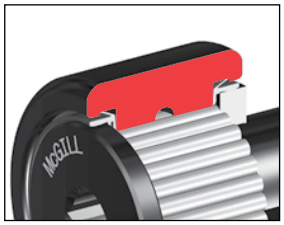

Heavy Section Outer

The heavy section outer helps support radial loading and provide proper rolling element support.

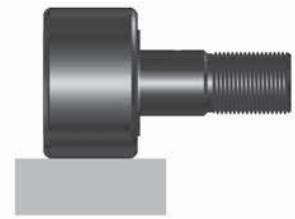

Cylindrical Outside Diameter (OD)

The cylindrical OD can improve performance in certain applications such as improved track capacity by maximizing the contact area with the track.

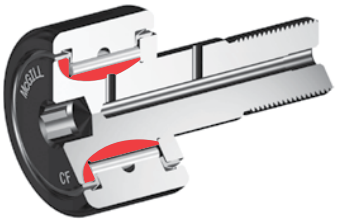

Zone Hardened Raceways

Heat treatment used to precisely harden working surfaces of the raceway and flange. The hardened surfaces provide support for the rolling element contact stresses, while keeping the core of the inner ductile to help absorb shock loads.

Features and Benefits continued

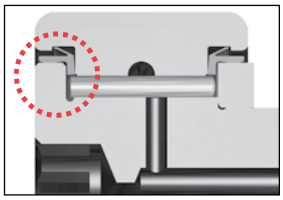

Integral Flange - Stud Type

The integral flange helps maintain bearing integrity throughout the bearing life. Zone hardened to provide wear resistance from incidental contact with the outer or rollers, and provides a sealing surface with LUBRI-DISC® seal option.

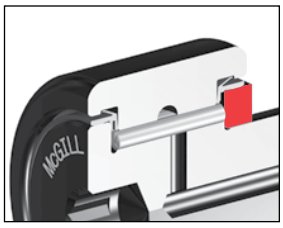

Hardened Endplate

The endplate provides a locating shoulder when mounting the stud or yoke style cam follower. Also, similar to the flange, the endplate must resist wear from incidental contact with the outer or rollers. The hardened and ground endplate provides a sealing surface with LUBRI-DISC® seal option.

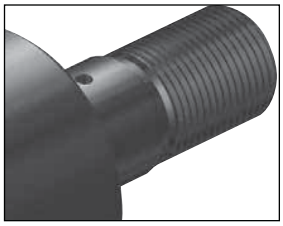

Roll Formed Threads - Stud Type

Roll forming is the process used to produce threads. By moving the material into shape instead of cutting the threads, the threads are produced to meet class 6G tolerances and are work hardened resulting in improved holding power. Available in both Asian (with "A" suffix) or European Metric as standard.

Factory Grease Fill

The cam follower and cam yoke roller bearings are factory lubricated with a medium temperature grease. Contact Application Engineering when application conditions require special lubricants.

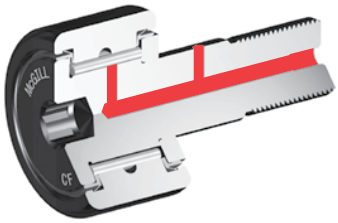

Lubrication Holes

Most sizes of McGill CAMROL bearings include lubrication hole(s) to accept a standard drive fitting or an included plug. The oil hole plug is recommended for closing unused lubrication hole to help protect against bearing contamination or lubrication loss.

McGill CAMROL Yoke roller bearings include a lubrication hole to provide a passage for lubrication to the rolling elements from the yoke roller bore. The customer supplied shaft must provide an axial lubrication path to supply bearing.

Features and Benefits continued

Black Oxide Finish

Bearings have a black oxide finish on all external surfaces.

Permanent Marking

Part number permanently marked on bearing face, helps bearing identification after years of service.

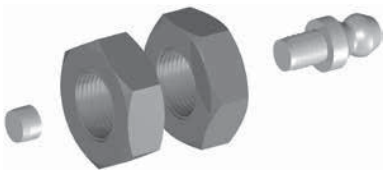

Installation Accessory Pack

All McGill Metric Cam followers include (2) jam nuts to ensure proper thread type (Asian / European), Fitting and plug to help provide proper lubrication path to the rolling elements and prevent contamination from entering the bearing through a unused hole.

Options

Retainer Type

The retainer (cage) option provides heat-treated steel cage for improved durability and wear resistance. The needle separation produces larger lubrication reservoir and helps achieve higher bearing speeds.. The cages are designed with two rollers per pockets (except 13, 16 and 19mm OD's) to help improve static and dynamic load ratings.

Options

LUBRI-DISC® Seal

The CAMROL standard for seals, the LUBRI-DISC seal not only helps keep contaminants out and lubrication in the bearing, but with an integral back plate to separate the metal to metal contact between the outer ring and endplate(s) or flange. The back plate feature reduce friction resulting in lower operating temperatures which can extend grease life and allowing for higher operating speeds Our seal also includes vents to help prevent seal blowout during relubrication. The LUBRI-DISC seal option has a good balance of sealing and low drag operation essential to a precision cam follower suited for most industrial applications.

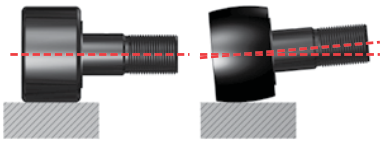

Crowned Outside Diameter (OD)

A crown on the OD of a cam follower bearing can help increase bearing life versus a standard cylindrical cam follower. The crown achieves this performance by helping to distribute the stress on the outer ring and rolling elements resulting from misalignment due to mounting inaccuracy or stud deflection. The crown may also help reduce outer skidding in turntable or rotary applications. Not all applications may see the benefit of a crowned OD, consult Application Engineering for guidance for your application.

Hex Hole (Broached)

The hex hole can aide in the installation and removal of stud type cam followers by a more positive hold on the cam follower stud versus a standard screw driver slot. The hex feature is identified with a “B” since it is produced using a broach process. Bearing relubrication from flange end must be considered for sizes under 3”.

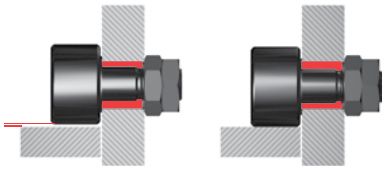

Eccentric Stud

Eccentric stud option provides a means of adjusting the radial position of the bearing, which can improve the load sharing of inline bearing combinations. Cam follower load sharing helps reduce operation costs by reducing premature failures due to overloaded bearings, the need of precise mounting hole location tolerances and providing ability to realign bearing due to track wear. Eccentric bushing is press fit on stud and unhardened to permit dowel or setscrew for permanent locking.

Additional Options

BHT
Broached (Hex) hole at threaded end of cam follower stud.

THT
Threaded axial lubrication hole at threaded end of cam follower stud.

THF
Threaded axial lubrication hole at flanged end of cam follower stud. Available with all screw driver slot cam followers or broached cam followers over 3”.

THB
Threaded axial oil hole on both ends of cam follower stud. Available with all screw driver slot cam followers or broached cam followers over 3”.

ALG
Annular lubrication groove at cam follower stem radial lubrication hole.

Custom Capabilities

- *Customer specified factory grease fill*
- *Grease fitting installed*
- *Stud or thread length modifications*
- *Roller diameter variations or tolerances*
- *Cam followers grouped or matched diameter tolerance / run out sets*
- *Custom engineered to order designs*

McGILL® Metric CAMROL Bearings

Basic Construction Type: Stud Type Crowned / Cylindrical Outside Diameter

Rolling Elements: Full Complement / Retained (Caged) Needle Roller

Bearing Material: Bearing Quality Steel

Seal Type: LUBRI-DISC®

Lubrication: Lithium Soap Grease NLGI #2

System Configuration: Concentric / Eccentric

Mounting Feature: Slot / Hex Hole

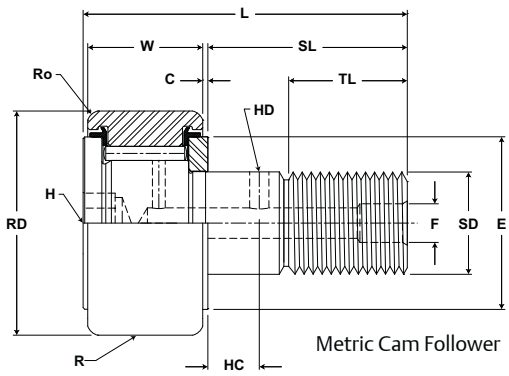

Metric Cam Follower

MCF, MCFE

Part No. W/O Seals	Part No. With LUBRI-DISC Seals	RD Roller Diameter mm Nom.	RD Roller Diameter mm Tol.	RD Roller Diameter inch Nom.	RD Roller Diameter inch Tol.	W Roller Width mm Nom.	W Roller Width mm Tol.	W Roller Width inch Nom.	W Roller Width inch Tol.	SD Stud Diameter mm Nom.	SD Stud Diameter mm Tol.	SD Stud Diameter inch Nom.	SD Stud Diameter inch Tol.	SL Stud Length mm (Ref)	SL Stud Length inch (Ref)	C Endplate Extension mm (Ref)	C Endplate Extension inch (Ref)	TL Minimum Thread Length mm (Ref)	TL Minimum Thread Length inch (Ref)	L Length Overall mm (Ref)	L Length Overall inch (Ref)	R Cylindrical Suffix MCF-xx-X mm Radius	R Cylindrical Suffix MCF-xx-X inch Radius	ECC Eccentric Base Modifier MCFE-xx mm (Ref)	ECC Eccentric Base Modifier MCFE-xx inch (Ref)	G Eccentric Base Modifier MCFE-xx mm +05/-.15	G Eccentric Base Modifier MCFE-xx inch +.002/-.006	BD Eccentric Base Modifier MCFE-xx mm (Ref)	BD Eccentric Base Modifier MCFE-xx inch (Ref)	Track Roller Dynamic Rating N/lb	Track Roller Static Rating N/lb
MCFR 13 MCFR 13 B MCFR 13 X MCFR 13 BX	MCFR 13 S MCFR 13 SB MCFR 13 SX MCFR 13 SBX	13.000	+0/-.050 +0/-.002 +0/-.008 +0/-.0003	.5118		9.000	0/-0.12 +0/-0.005	.3543		5.000	+0/-.012 +0/-.0005	.1969		13	.5	.60	.024	7.5	.30	23	.9	500	19.7 Cylindrical	N/A		N/A		N/A		2,060	1,650
																														463	371
MCF 16 MCF 16 B MCF 16 X MCF 16 BX	MCF 16 S MCF 16 SB MCF 16 SX MCF 16 SBX	16.000	+0/-.050 +0/-.002 +0/-.008 +0/-.0003	.6299		11.000	0/-0.12 +0/-0.005	.4331		6.000	+0/-.012 +0/-.0005	.2362		16	.6	.60	.024	9.0	.35	28	1.1	500	19.7 Cylindrical	N/A		N/A		N/A		5,790	2,350
																														1,302	528
MCFE 16	MCFE 16 S MCFE 16 SB MCFE 16 SX MCFE 16 SBX	16.000	+0/-.050 +0/-.002 +0/-.008 +0/-.0003	.6299		11.000	0/-0.12 +0/-0.005	.4331		6.000	+0/-.012 +0/-.0005	.2362		16	.6	.60	.024	9.0	.35	28	1.1	500	19.7 Cylindrical	0.5	.02	7	0.27	9	.35		
MCFR 16 MCFR 16 B MCFR 16 X MCFR 16 BX	MCFR 16 S MCFR 16 SB MCFR 16 SX MCFR 16 SBX	16.000	+0/-.050 +0/-.002 +0/-.008 +0/-.0003	.6299		11.000	0/-0.12 +0/-0.005	.4331		6.000	+0/-.012 +0/-.0005	.2362		16	.6	.60	.024	9.0	.35	28	1.1	500	19.7 Cylindrical	N/A		N/A		N/A		3,430	2,350
																														771	528
MCFRE 16	MCFRE 16 S MCFRE 16 SB MCFRE 16 SX MCFRE 16 SBX	16.000	+0/-.050 +0/-.002 +0/-.008 +0/-.0003	.6299		11.000	0/-0.12 +0/-0.005	.4331		6.000	+0/-.012 +0/-.0005	.2362		16	.6	.60	.024	9.0	.35	28	1.1	500	19.7 Cylindrical	0.5	.02	7	0.27	9	.35		
MCF 19 MCF 19 B MCF 19 X MCF 19 BX	MCF 19 S MCF 19 SB MCF 19 SX MCF 19 SBX	19.000	+0/-.050 +0/-.002 +0/-.009 +0/-.0004	.7480		11.000	+0/-.12 +0/-.005	.4331		8.000	+0/-.015 +0/-.0006	.3150		20	.8	.60	.024	11.0	.43	32	1.3	500	19.7 Cylindrical	N/A		N/A		N/A		6,670	5,100
																														1,500	1,147
MCFE 19	MCFE 19 S MCFE 19 SB MCFE 19 SX MCFE 19 SBX	19.000	+0/-.050 +0/-.002 +0/-.009 +0/-.0004	.7480		11.000	+0/-.12 +0/-.005	.4331		8.000	+0/-.015 +0/-.0006	.3150		20	.8	.60	.024	11.0	.43	32	1.3	500	19.7 Cylindrical	0.5	.02	9	0.35	11	.43		
MCFR 19 MCFR 19 B MCFR 19 X MCFR 19 BX	MCFR 19 S MCFR 19 SB MCFR 19 SX MCFR 19 SBX	19.000	+0/-.050 +0/-.002 +0/-.009 +0/-.0004	.7480		11.000	+0/-.12 +0/-.005	.4331		8.000	+0/-.015 +0/-.0006	.3150		20	.8	.60	.024	11.0	.43	32	1.3	500	19.7 Cylindrical	N/A		N/A		N/A		3,730	4,140
																														839	931
MCFRE 19	MCFRE 19 S MCFRE 19 SB MCFRE 19 SX MCFRE 19 SBX	19.000	+0/-.050 +0/-.002 +0/-.009 +0/-.0004	.7480		11.000	+0/-.12 +0/-.005	.4331		8.000	+0/-.015 +0/-.0006	.3150		20	.8	.60	.024	11.0	.43	32	1.3	500	19.7 Cylindrical	0.5	.02	9	0.35	11	.43		

1. Standard bearing has a crowned roller outside diameter. For straight cylindrical outside roller diameter, add suffix "X". Example - MCFR-35-X or MCF-35-SX.
2. Clamping torque is based on dry threads. If threads are lubricated, use half of value shown.
3. Static load rating is based on stud strength or on internal rolling element load distribution stresses.

Inch dimensions for reference only.

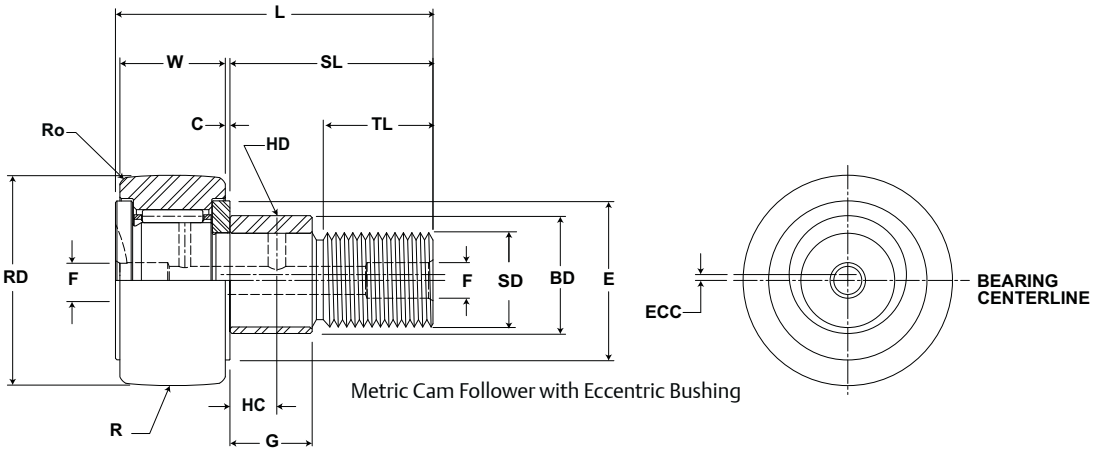

Metric Cam Follower with Eccentric Bushing

MCF, MCFE

Part No. W/O Seals	Part No. With LUBRI-DISC Seals	HC Hole Center mm inch (Ref)	HD Radial Lub. Hole Diameter mm inch (Ref)	F Lub. Hole Dia mm inch (Ref)	H Hex Hole Suffix MCF_xx B mm inch (Ref)	Ro Outer Corner mm inch (Ref)	E Min. Clamping Diameter mm inch (Ref)	Housing Bore Diameter mm inch Nom.	Housing Bore Diameter mm inch Tol.	Thread Type	Clamping Torque Nm in-lb	Limiting Speed (Grease) RPM	WT Bearing Weight kg lb
MCFR 13	MCFR 13 S	-	-	3.1 .12	N/A	.3 .01	9 .4	5.000 .1969	+.012/-0 +.0005/- 0	M5x0.8	2.2 19	20,000	.01 .02
MCFR 13 B	MCFR 13 SB			-	3.1 .12								
MCFR 13 X	MCFR 13 SX			3.1 .12	N/A								
MCFR 13 BX	MCFR 13 SBX			-	3.1 .12								
MCF 16	MCF 16 S	-	-	4 .16	N/A	.3 .01	11 .4	6.000 .2362	+.012/-0 +.0005/- 0	M6x1	3 27	13,000	.02 .04
MCF 16 B	MCF 16 SB			-	4 .16								
MCF 16 X	MCF 16 SX			4 .16	N/A								
MCF 16 BX	MCF 16 SBX			-	4 .16								
MCFE 16	MCFE 16 S	-	-	4 .16	N/A	.3 .01	11 .4	11.050 .4350	+0.025/-0 +0.0009/- 0	M6x1	3 27	13,000	.02 .04
	MCFE 16 SB			-	4 .16								
	MCFE 16 SX			4 .16	N/A								
	MCFE 16 SBX			-	4 .16								
MCFR 16	MCFR 16 S	-	-	4 .16	N/A	.3 .01	11 .4	6.000 .2362	+.012/-0 +.0005/- 0	M6x1	3 27	19,500	.02 .04
MCFR 16 B	MCFR 16 SB			-	4 .16								
MCFR 16 X	MCFR 16 SX			4 .16	N/A								
MCFR 16 BX	MCFR 16 SBX			-	4 .16								
MCFRE 16	MCFRE 16 S	-	-	4 .16	N/A	.3 .01	11 .4	11.050 .4350	+.012/-0 +.0005/- 0	M6x1	3 27	19,500	.02 .04
	MCFRE 16 SB			-	4 .16								
	MCFRE 16 SX			4 .16	N/A								
	MCFRE 16 SBX			-	4 .16								
MCF 19	MCF 19 S	-	-	4 .16	N/A	.3 .01	13 .5	8.000 .3150	+.015/-0 +.0006/- 0	M8x1.25	8 71	10,500	.03 .07
MCF 19 B	MCF 19 SB			-	4 .16								
MCF 19 X	MCF 19 SX			4 .16	N/A								
MCF 19 BX	MCF 19 SBX			-	4 .16								
MCFE 19	MCFE 19 S	-	-	4 .16	N/A	.3 .01	13 .5	13.050 .5138	+0.025/-0 +0.0009/- 0	M8x1.25	8 71	10,500	.03 .07
	MCFE 19 SB			-	4 .16								
	MCFE 19 SX			4 .16	N/A								
	MCFE 19 SBX			-	4 .16								
MCFR 19	MCFR 19 S	-	-	4 .16	N/A	.3 .01	13 .5	8.000 .3150	+.015/-0 +.0006/- 0	M8x1.25	8 71	15,500	.03 .07
MCFR 19 B	MCFR 19 SB			-	4 .16								
MCFR 19 X	MCFR 19 SX			4 .16	N/A								
MCFR 19 BX	MCFR 19 SBX			-	4 .16								
MCFRE 19	MCFRE 19 S	-	-	4 .16	N/A	.3 .01	13 .5	13.050 .5138	+.015/-0 +.0006/- 0	M8x1.25	8 71	15,500	.03 .07
	MCFRE 19 SB			-	4 .16								
	MCFRE 19 SX			4 .16	N/A								
	MCFRE 19 SBX			-	4 .16								

4. Dynamic load should not exceed 50% of Dynamic Rating as a track roller.

5. Since load, lubrication method, temperature and other factors affect the maximum operating speed, it is impossible to determine precise limiting speed. The listed limiting speeds are based on lightly loaded bearings having adequate lubrication and are listed only as a design guide. More frequent relubrication is required when operating at higher speeds. Actual bearing testing in the specific application should be conducted if the anticipated operating speed approaches the listed limiting speed.

* Sizes 13 - 19 have no lube holes in the threaded end of the stud.

McGILL® Metric CAMROL Bearings

Basic Construction Type: Stud Type Crowned / Cylindrical Outside Diameter

Rolling Elements: Full Complement / Retained (Caged) Needle Roller

Bearing Material: Bearing Quality Steel

Seal Type: LUBRI-DISC®

Lubrication: Lithium Soap Grease NLGI #2

System Configuration: Concentric / Eccentric

Mounting Feature: Slot / Hex Hole

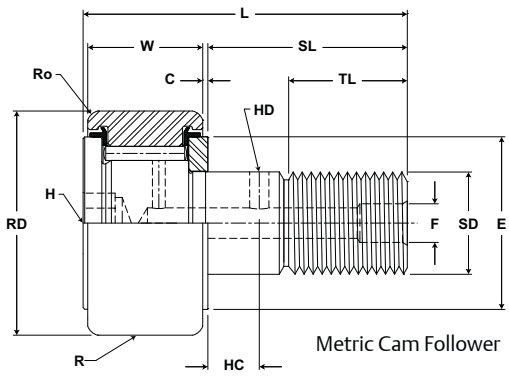

Metric Cam Follower

MCF, MCFE

Part No.		RD		W		SD		SL	C	TL	L	R	ECC	G	BD	Track Roller Dynamic Rating	Track Roller Static Rating
W/O Seals	With LUBRI-DISC Seals	Roller Diameter		Roller Width		Stud Diameter		Stud Length	Endplate Extension	Minimum Thread Length	Length Overall	Cylindrical Suffix MCF-xx-X	Eccentric Base Modifier MCFE-xx				
		mm inch		mm inch		mm inch		mm inch		mm inch		mm inch	mm inch			N/lb	N/lb
		Nom.	Tol.	Nom.	Tol.	Nom.	Tol.	(Ref)	(Ref)	(Ref)	(Ref)	Radius	(Ref)	+05/-.15 +.002/-.006	(Ref)		
MCF 22 MCF 22 B MCF 22 X MCF 22 BX	MCF 22 S MCF 22 SB MCF 22 SX MCF 22 SBX	22.000 .8661	+0/-.050 +0/-.002 +0/-.009 +0/-.0004	12.000 .4724	+0/-.12 +0/-.005	10.000 .3937	+0/-.015 +0/-.0006	23 .9	.60 .024	12.0 .47	36 1.4	500 19.7 Cylindrical	N/A	N/A	N/A	7,850 1,765	10,400 2,338
MCFE 22	MCFE 22 S MCFE 22 SB MCFE 22 SX MCFE 22 SBX	22.000 .8661	+0/-.050 +0/-.002 +0/-.009 +0/-.0004	12.000 .4724	+0/-.12 +0/-.005	10.000 .3937	+0/-.015 +0/-.0006	23 .9	.60 .024	12.0 .47	36 1.4	500 19.7 Cylindrical	0.5 .02	10 0.39	13 .51		
MCFR 22 MCFR 22 B MCFR 22 X MCFR 22 BX	MCFR 22 S MCFR 22 SB MCFR 22 SX MCFR 22 SBX	22.000 .8661	+0/-.050 +0/-.002 +0/-.009 +0/-.0004	12.000 .4724	+0/-.12 +0/-.005	10.000 .3937	+0/-.015 +0/-.0006	23 .9	.60 .024	12.0 .47	36 1.4	500 19.7 Cylindrical	N/A	N/A	N/A	5,200 1,169	6,050 1,360
MCFRE 22	MCFRE 22 S MCFRE 22 SB MCFRE 22 SX MCFRE 22 SBX	22.000 .8661	+0/-.050 +0/-.002 +0/-.009 +0/-.0004	12.000 .4724	+0/-.12 +0/-.005	10.000 .3937	+0/-.015 +0/-.0006	23 .9	.60 .024	12.0 .47	36 1.4	500 19.7 Cylindrical	0.5 .02	10 0.39	13 .51		
MCF 22A MCF 22A B MCF 22A X MCF 22A BX	MCF 22A S MCF 22A SB MCF 22A SX MCF 22A SBX	22.000 .8661	+0/-.050 +0/-.002 +0/-.009 +0/-.0004	12.000 .4724	+0/-.12 +0/-.005	10.000 .3937	+0/-.015 +0/-.0006	23 .9	.60 .024	13.0 .51	36 1.4	500 19.7 Cylindrical	N/A	N/A	N/A	7,850 1,765	10,400 2,338
MCFE 22A	MCFE 22A S MCFE 22A SB MCFE 22A SX MCFE 22A SBX	22.000 .8661	+0/-.050 +0/-.002 +0/-.009 +0/-.0004	12.000 .4724	+0/-.12 +0/-.005	10.000 .3937	+0/-.015 +0/-.0006	23 .9	.60 .024	13.0 .51	36 1.4	500 19.7 Cylindrical	0.5 .02	10 0.39	13 .51		
MCFR 22A MCFR 22A B MCFR 22A X MCFR 22A BX	MCFR 22A S MCFR 22A SB MCFR 22A SX MCFR 22A SBX	22.000 .8661	+0/-.050 +0/-.002 +0/-.009 +0/-.0004	12.000 .4724	+0/-.12 +0/-.005	10.000 .3937	+0/-.015 +0/-.0006	23 .9	.60 .024	13.0 .51	36 1.4	500 19.7 Cylindrical	N/A	N/A	N/A	5,200 1,169	6,050 1,360
MCFRE 22A	MCFRE 22A S MCFRE 22A SB MCFRE 22A SX MCFRE 22A SBX	22.000 .8661	+0/-.050 +0/-.002 +0/-.009 +0/-.0004	12.000 .4724	+0/-.12 +0/-.005	10.000 .3937	+0/-.015 +0/-.0006	23 .9	.60 .024	13.0 .51	36 1.4	500 19.7 Cylindrical	0.5 .02	10 0.39	13 .51		

1. Standard bearing has a crowned roller outside diameter. For straight cylindrical outside roller diameter, add suffix "X". Example - MCFR-35-X or MCF-35-SX.
2. Clamping torque is based on dry threads. If threads are lubricated, use half of value shown.
3. Static load rating is based on stud strength or on internal rolling element load distribution stresses.
4. Dynamic load should not exceed 50% of Dynamic Rating as a track roller.
5. Since load, lubrication method, temperature and other factors affect the maximum operating speed, it is impossible to determine precise limiting speed. The listed limiting speeds are based on lightly loaded bearings having adequate lubrication and are listed only as a design guide. More frequent relubrication is required when operating at higher speeds. Actual bearing testing in the specific application should be conducted if the anticipated operating speed approaches the listed limiting speed.

Inch dimensions for reference only.
Not all parts are available from stock. Please contact customer service for availability (800) 626-2120.
For more information on bearing capabilities outside of our standard offering, please contact Application Engineering (800) 626-2093.

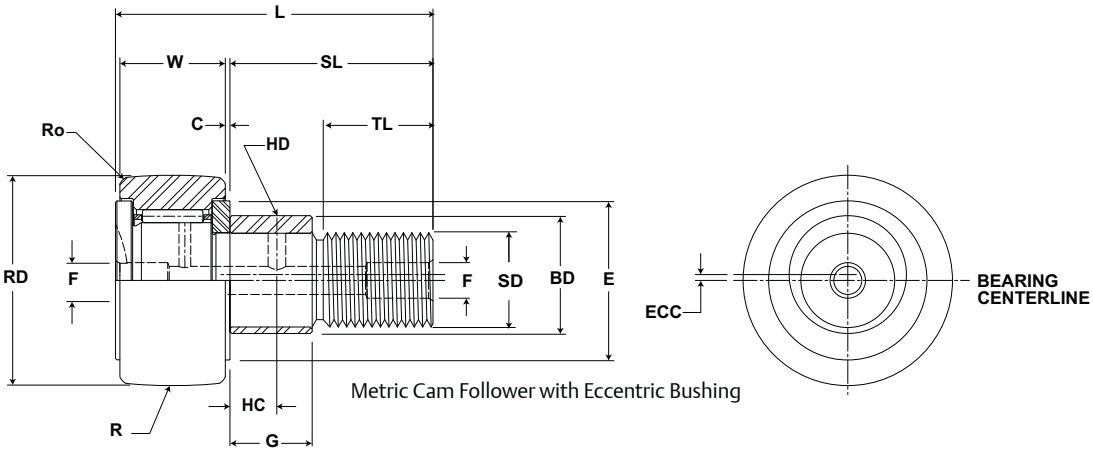

Metric Cam Follower with Eccentric Bushing

MCF, MCFE

Part No.		HC	HD	F	H	Ro	E	Housing Bore Diameter		Thread Type	Clamping Torque	Limiting Speed (Grease)	WT
W/O Seals	With LUBRI-DISC Seals	Hole Center	Radial Lub. Hole Diameter	Lub. Hole Dia	Hex Hole Suffix MCF_xx B	Outer Corner	Min. Clamping Diameter						Bearing Weight
		mm inch		mm inch		mm inch		mm inch			Nm in-lb	RPM	kg lb
		(Ref)	(Ref)	(Ref)	(Ref)	(Ref)	(Ref)	Nom.	Tol.				
MCF 22	MCF 22 S	-	-	4 .16	N/A	.5 .02	15 .6	10.000 .3937	+.015/-0 +.0006/- 0	M10x1	15 133	9,000	.04 .09
MCF 22 B	MCF 22 SB			-	4 .16								
MCF 22 X	MCF 22 SX			4 .16	N/A								
MCF 22 BX	MCF 22 SBX			-	4 .16								
MCFE 22	MCFE 22 S	-	-	4 .16	N/A	.5 .02	15 .6	13.050 .5138	+0.025/-0 +0.0009/- 0	M10x1	15 133	9,000	.04 .09
	MCFE 22 SB			-	4 .16								
	MCFE 22 SX			4 .16	N/A								
	MCFE 22 SBX			-	4 .16								
MCFR 22	MCFR 22 S	-	-	4 .16	N/A	.5 .02	15 .6	10.000 .3937	+.015/-0 +.0006/- 0	M10x1	15 133	13,500	.04 .09
MCFR 22 B	MCFR 22 SB			-	4 .16								
MCFR 22 X	MCFR 22 SX			4 .16	N/A								
MCFR 22 BX	MCFR 22 SBX			-	4 .16								
MCFRE 22	MCFRE 22 S	-	-	4 .16	N/A	.5 .02	15 .6	13.050 .5138	+0.025/-0 +0.0009/- 0	M10x1	15 133	13,500	.04 .09
	MCFRE 22 SB			-	4 .16								
	MCFRE 22 SX			4 .16	N/A								
	MCFRE 22 SBX			-	4 .16								
MCF 22A	MCF 22A S	-	-	4 .16	N/A	.5 .02	15 .6	10.000 .3937	+.015/-0 +.0006/- 0	M10x1.25	15 133	9,000	.04 .09
MCF 22A B	MCF 22A SB			-	5 .2								
MCF 22A X	MCF 22A SX			4 .16	N/A								
MCF 22A BX	MCF 22A SBX			-	5 .2								
MCFE 22A	MCFE 22A S	-	-	4 .16	N/A	.5 .02	15 .6	13.050 .5138	+0.025/-0 +0.0009/- 0	M10x1.25	15 133	9,000	.04 .09
	MCFE 22A SB			-	5 .2								
	MCFE 22A SX			4 .16	N/A								
	MCFE 22A SBX			-	5 .2								
MCFR 22A	MCFR 22A S	-	-	4 .16	N/A	.5 .02	15 .6	10.000 .3937	+.015/-0 +.0006/- 0	M10x1.25	15 133	13,500	.04 .09
MCFR 22A B	MCFR 22A SB			-	5 .2								
MCFR 22A X	MCFR 22A SX			4 .2	N/A								
MCFR 22A BX	MCFR 22A SBX			-	5 .2								
MCFRE 22A	MCFRE 22A S	-	-	4 .16	N/A	.5 .02	15 .6	13.050 .5138	+0.025/-0 +0.0009/- 0	M10x1.25	15 133	13,500	.04 .09
	MCFRE 22A SB			-	5 .2								
	MCFRE 22A SX			4 .16	N/A								
	MCFRE 22A SBX			-	5 .2								

McGILL® Metric CAMROL Bearings

Basic Construction Type: Stud Type Crowned / Cylindrical Outside Diameter

Rolling Elements: Full Complement / Retained (Caged) Needle Roller

Bearing Material: Bearing Quality Steel

Seal Type: LUBRI-DISC®

Lubrication: Lithium Soap Grease NLGI #2

System Configuration: Concentric / Eccentric

Mounting Feature: Slot / Hex Hole

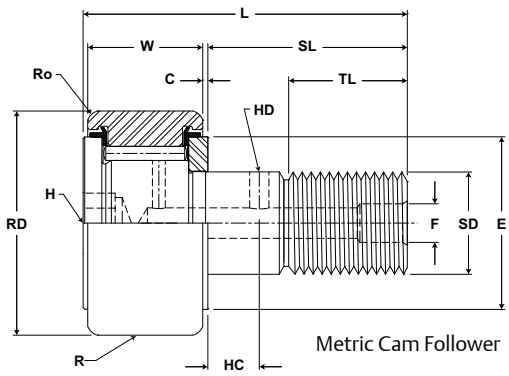

Metric Cam Follower

MCF, MCFE

Part No. W/O Seals	Part No. With LUBRI-DISC Seals	RD Roller Diameter mm (Nom.)	RD Roller Diameter mm (Tol.)	RD Roller Diameter inch (Nom.)	RD Roller Diameter inch (Tol.)	W Roller Width mm (Nom.)	W Roller Width mm (Tol.)	W Roller Width inch (Nom.)	W Roller Width inch (Tol.)	SD Stud Diameter mm (Nom.)	SD Stud Diameter mm (Tol.)	SD Stud Diameter inch (Nom.)	SD Stud Diameter inch (Tol.)	SL Stud Length mm (Ref)	SL Stud Length inch (Ref)	C Endplate Extension mm (Ref)	C Endplate Extension inch (Ref)	TL Minimum Thread Length mm (Ref)	TL Minimum Thread Length inch (Ref)	L Length Overall mm (Ref)	L Length Overall inch (Ref)	R Cylindrical Suffix MCF-xx-X mm Radius	R Cylindrical Suffix MCF-xx-X inch Radius	ECC Eccentric Base Modifier MCFE-xx mm (Ref)	ECC Eccentric Base Modifier MCFE-xx inch (Ref)	G Eccentric Base Modifier MCFE-xx mm +05/-.15	G Eccentric Base Modifier MCFE-xx inch +.002/-.006	BD Eccentric Base Modifier MCFE-xx mm (Ref)	BD Eccentric Base Modifier MCFE-xx inch (Ref)	Track Roller Dynamic Rating N/lb	Track Roller Static Rating N/lb
MCF 26	MCF 26 S	26.000	+0/-.050	1.0236	+0/-.002	12.000	+0/-.12	.4724	+0/-.005	10.000	+0/-.015	.3937	+0/-.0006	23	.9	.60	.024	12.0	.47	36	1.4	500	19.7	N/A	N/A	N/A	N/A	N/A	N/A	7,850	10,400
MCF 26 B	MCF 26 SB																					Cylindrical								1,765	2,338
MCF 26 X	MCF 26 SX		+0/-.009		+0/-.0004																										
MCF 26 BX	MCF 26 SBX																														
MCFE 26	MCFE 26 S	26.000	+0/-.050	1.0236	+0/-.002	12.000	+0/-.12	.4724	+0/-.005	10.000	+0/-.015	.3937	+0/-.0006	23	.9	.60	.024	12.0	.47	36	1.4	500	19.7	0.5	.02	10	0.39	13	.51	7,850	10,400
	MCFE 26 SB																					Cylindrical								1,765	2,338
	MCFE 26 SX		+0/-.009		+0/-.0004																										
	MCFE 26 SBX																														
MCFR 26	MCFR 26 S	26.000	+0/-.050	1.0236	+0/-.002	12.000	+0/-.12	.4724	+0/-.005	10.000	+0/-.015	.3937	+0/-.0006	23	.9	.60	.024	12.0	.47	36	1.4	500	19.7	N/A	N/A	N/A	N/A	N/A	N/A	5,200	6,050
MCFR 26 B	MCFR 26 SB																					Cylindrical								1,169	1,360
MCFR 26 X	MCFR 26 SX		+0/-.009		+0/-.0004																										
MCFR 26 BX	MCFR 26 SBX																														
MCFRE 26	MCFRE 26 S	26.000	+0/-.050	1.0236	+0/-.002	12.000	+0/-.12	.4724	+0/-.005	10.000	+0/-.015	.3937	+0/-.0006	23	.9	.60	.024	12.0	.47	36	1.4	500	19.7	0.5	.02	10	0.39	13	.51	5,200	6,050
	MCFRE 26 SB																					Cylindrical								1,169	1,360
	MCFRE 26 SX		+0/-.009		+0/-.0004																										
	MCFRE 26 SBX																														
MCF 26A	MCF 26A S	26.000	+0/-.050	1.0236	+0/-.002	12.000	+0/-.12	.4724	+0/-.005	10.000	+0/-.015	.3937	+0/-.0006	23	.9	.60	.024	13.0	.51	36	1.4	500	19.7	N/A	N/A	N/A	N/A	N/A	N/A	7,850	10,400
MCF 26A B	MCF 26A SB																					Cylindrical								1,765	2,338
MCF 26A X	MCF 26A SX		+0/-.009		+0/-.0004																										
MCF 26A BX	MCF 26A SBX																														
MCFE 26A	MCFE 26A S	26.000	+0/-.050	1.0236	+0/-.002	12.000	+0/-.12	.4724	+0/-.005	10.000	+0/-.015	.3937	+0/-.0006	23	.9	.60	.024	13.0	.51	36	1.4	500	19.7	0.5	.02	10	0.39	13	.51		
	MCFE 26A SB																					Cylindrical									
	MCFE 26A SX		+0/-.009		+0/-.0004																										
	MCFE 26A SBX																														
MCFR 26A	MCFR 26A S	26.000	+0/-.050	1.0236	+0/-.002	12.000	+0/-.12	.4724	+0/-.005	10.000	+0/-.015	.3937	+0/-.0006	23	.9	.60	.024	13.0	.51	36	1.4	500	19.7	N/A	N/A	N/A	N/A	N/A	N/A		
MCFR 26A B	MCFR 26A SB																					Cylindrical									
MCFR 26A X	MCFR 26A SX		+0/-.009		+0/-.0004																										
MCFR 26A BX	MCFR 26A SBX																														
MCFRE 26A	MCFRE 26A S	26.000	+0/-.050	1.0236	+0/-.002	12.000	+0/-.12	.4724	+0/-.005	10.000	+0/-.015	.3937	+0/-.0006	23	.9	.60	.024	13.0	.51	36	1.4	500	19.7	0.5	.02	10	0.39	13	.51		
	MCFRE 26A SB																					Cylindrical									
	MCFRE 26A SX		+0/-.009		+0/-.0004																										
	MCFRE 26A SBX																														

1. Standard bearing has a crowned roller outside diameter. For straight cylindrical outside roller diameter, add suffix "X". Example - MCFR-35-X or MCF-35-SX.
2. Clamping torque is based on dry threads. If threads are lubricated, use half of value shown.
3. Static load rating is based on stud strength or on internal rolling element load distribution stresses.
4. Dynamic load should not exceed 50% of Dynamic Rating as a track roller.
5. Since load, lubrication method, temperature and other factors affect the maximum operating speed, it is impossible to determine precise limiting speed. The listed limiting speeds are based on lightly loaded bearings having adequate lubrication and are listed only as a design guide. More frequent relubrication is required when operating at higher speeds. Actual bearing testing in the specific application should be conducted if the anticipated operating speed approaches the listed limiting speed.

Inch dimensions for reference only.
Not all parts are available from stock. Please contact customer service for availability (800) 626-2120.
For more information on bearing capabilities outside of our standard offering, please contact Application Engineering (800) 626-2093.

Metric CAMROL Bearings

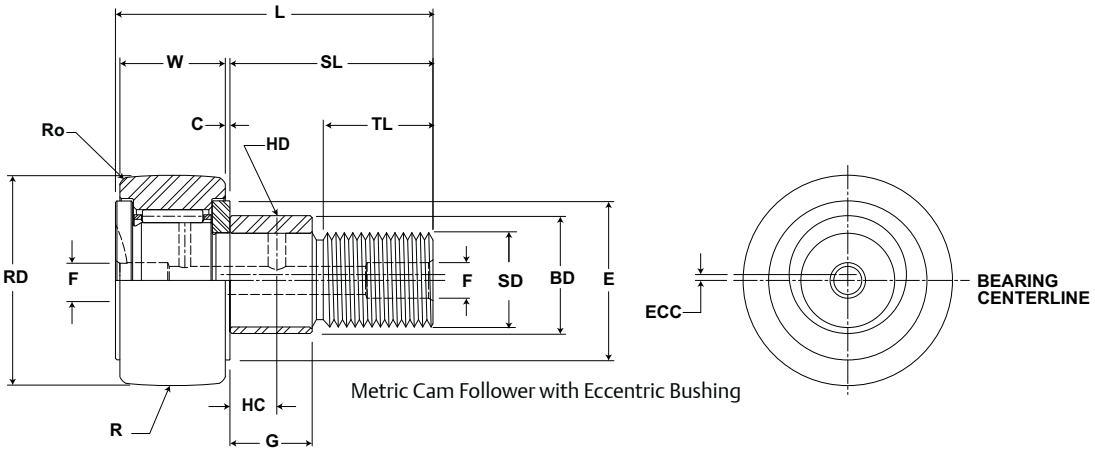

Metric Cam Follower with Eccentric Bushing

MCF, MCFE

Part No. W/O Seals	Part No. With LUBRI-DISC Seals	HC Hole Center mm inch (Ref)	HD Radial Lub. Hole Diameter mm inch (Ref)	F Lub. Hole Dia mm inch (Ref)	H Hex Hole Suffix MCF_xx B mm inch (Ref)	Ro Outer Corner mm inch (Ref)	E Min. Clamping Diameter mm inch (Ref)	Housing Bore Diameter mm inch Nom.	Housing Bore Diameter mm inch Tol.	Thread Type	Clamping Torque Nm in-lb	Limiting Speed (Grease) RPM	WT Bearing Weight kg lb
MCF 26	MCF 26 S	-	-	4 .16	N/A	.5 .02	15 .6	10.000 .3937	+.015/-0 +.0006/- 0	M10x1	15 133	9,000	.05 .11
MCF 26 B	MCF 26 SB			-	4 .16								
MCF 26 X	MCF 26 SX			4 .16	N/A								
MCF 26 BX	MCF 26 SBX			-	4 .16								
MCFE 26	MCFE 26 S	-	-	4 .16	N/A	.5 .02	15 .6	13.050 .5138	+0.025/-0 +0.0009/- 0	M10x1	15 133	9,000	.05 .11
	MCFE 26 SB			-	4 .16								
	MCFE 26 SX			4 .16	N/A								
	MCFE 26 SBX			-	4 .16								
MCFR 26	MCFR 26 S	-	-	4 .16	N/A	.5 .02	15 .6	10.000 .3937	+.015/-0 +.0006/- 0	M10x1	15 133	13,500	.05 .11
MCFR 26 B	MCFR 26 SB			-	4 .16								
MCFR 26 X	MCFR 26 SX			4 .16	N/A								
MCFR 26 BX	MCFR 26 SBX			-	4 .16								
MCFRE 26	MCFRE 26 S	-	-	4 .16	N/A	.5 .02	15 .6	13.050 .5138	+0.025/-0 +0.0009/- 0	M10x1	15 133	13,500	.05 .11
	MCFRE 26 SB			-	4 .16								
	MCFRE 26 SX			4 .16	N/A								
	MCFRE 26 SBX			-	4 .16								
MCF 26A	MCF 26A S	-	-	4 .16	N/A	.5 .02	19 .7	10.000 .3937	+.015/-0 +.0006/- 0	M10x1.25	22 195	9,000	.05 .11
MCF 26A B	MCF 26A SB			-	5 .2								
MCF 26A X	MCF 26A SX			4 .16	N/A								
MCF 26A BX	MCF 26A SBX			-	5 .2								
MCFE 26A	MCFE 26A S	-	-	4 .16	N/A	.5 .02	19 .7	13.050 .5138	+0.025/-0 +0.0009/- 0	M10x1.25	22 195	9,000	.05 .11
	MCFE 26A SB			-	5 .2								
	MCFE 26A SX			4 .16	N/A								
	MCFE 26A SBX			-	5 .2								
MCFR 26A	MCFR 26A S	-	-	4 .16	N/A	.5 .02	19 .7	10.000 .3937	+.015/-0 +.0006/- 0	M10x1.25	22 195	13,500	.05 .11
MCFR 26A B	MCFR 26A SB			-	5 .2								
MCFR 26A X	MCFR 26A SX			4 .16	N/A								
MCFR 26A BX	MCFR 26A SBX			-	5 .2								
MCFRE 26A	MCFRE 26A S	-	-	4 .16	N/A	.5 .02	19 .7	13.050 .5138	+0.025/-0 +0.0009/- 0	M10x1.25	22 195	13,500	.05 .11
	MCFRE 26A SB			-	5 .2								
	MCFRE 26A SX			4 .16	N/A								
	MCFRE 26A SBX			-	5 .2								

McGILL® Metric CAMROL Bearings

Basic Construction Type: Stud Type Crowned / Cylindrical Outside Diameter

Rolling Elements: Full Complement / Retained (Caged) Needle Roller

Bearing Material: Bearing Quality Steel

Seal Type: LUBRI-DISC®

Lubrication: Lithium Soap Grease NLGI #2

System Configuration: Concentric / Eccentric

Mounting Feature: Slot / Hex Hole

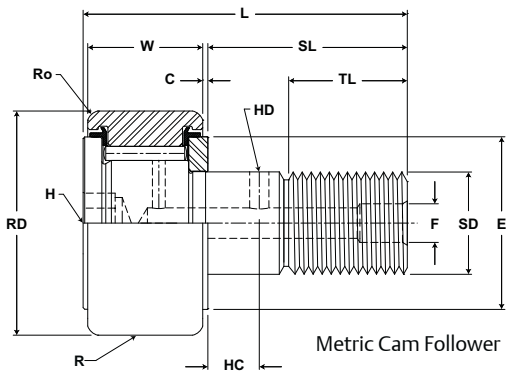

Metric Cam Follower

MCF, MCFE

Part No. W/O Seals	Part No. With LUBRI-DISC Seals	RD Roller Diameter mm Nom.	RD Roller Diameter mm Tol.	RD Roller Diameter inch Nom.	RD Roller Diameter inch Tol.	W Roller Width mm Nom.	W Roller Width mm Tol.	W Roller Width inch Nom.	W Roller Width inch Tol.	SD Stud Diameter mm Nom.	SD Stud Diameter mm Tol.	SD Stud Diameter inch Nom.	SD Stud Diameter inch Tol.	SL Stud Length mm (Ref)	SL Stud Length inch (Ref)	C Endplate Extension mm (Ref)	C Endplate Extension inch (Ref)	TL Minimum Thread Length mm (Ref)	TL Minimum Thread Length inch (Ref)	L Length Overall mm (Ref)	L Length Overall inch (Ref)	R Cylindrical Suffix MCF-xx-X mm Radius	R Cylindrical Suffix MCF-xx-X inch Radius	ECC Eccentric Base Modifier MCFE-xx mm (Ref)	ECC Eccentric Base Modifier MCFE-xx inch (Ref)	G Eccentric Base Modifier MCFE-xx mm +05/-.15	G Eccentric Base Modifier MCFE-xx inch +.002/-.006	BD Eccentric Base Modifier MCFE-xx mm (Ref)	BD Eccentric Base Modifier MCFE-xx inch (Ref)	Track Roller Dynamic Rating N/lb	Track Roller Static Rating N/lb
MCF 30 MCF 30 B MCF 30 X MCF 30 BX	MCF 30 S MCF 30 SB MCF 30 SX MCF 30 SBX	30.000	+0/-.050	1.1811	+0/-.002	14.000	+0/-.12	.5512	+0/-.005	12.000	+0/-.018	.4724	+0/-.0007	25	.9	.60	.024	14.0	.55	40	1.6	500	19.7	N/A	N/A	N/A	N/A	11,080	2,491	15,300	3,440
			+0/-.009		+0/-.0004																	Cylindrical									
MCFE 30	MCFE 30 S MCFE 30 SB MCFE 30 SX MCFE 30 SBX	30.000	+0/-.050	1.1811	+0/-.002	14.000	+0/-.12	.5512	+0/-.005	12.000	+0/-.018	.4724	+0/-.0007	25	.9	.60	.024	14.0	.55	40	1.6	500	19.7	0.5	.02	11	0.43	15	.59		
			+0/-.009		+0/-.0004																	Cylindrical									
MCFR 30 MCFR 30 B MCFR 30 X MCFR 30 BX	MCFR 30 S MCFR 30 SB MCFR 30 SX MCFR 30 SBX	30.000	+0/-.050	1.1811	+0/-.002	14.000	+0/-.12	.5512	+0/-.005	12.000	+0/-.018	.4724	+0/-.0007	25	.9	.60	.024	14.0	.55	40	1.6	500	19.7	N/A	N/A	N/A	N/A	6,860	1,542	8,050	1,810
			+0/-.009		+0/-.0004																	Cylindrical									
MCFRE 30	MCFRE 30 S MCFRE 30 SB MCFRE 30 SX MCFRE 30 SBX	30.000	+0/-.050	1.1811	+0/-.002	14.000	+0/-.12	.5512	+0/-.005	12.000	+0/-.018	.4724	+0/-.0007	25	.9	.60	.024	14.0	.55	40	1.6	500	19.7	0.5	.02	11	0.43	15	.59		
			+0/-.009		+0/-.0004																	Cylindrical									
MCF 32 MCF 32 B MCF 32 X MCF 32 BX	MCF 32 S MCF 32 SB MCF 32 SX MCF 32 SBX	32.000	+0/-.050	1.2598	+0/-.002	14.000	+0/-.12	.5512	+0/-.005	12.000	+0/-.018	.4724	+0/-.0007	25	.9	.60	.024	14.0	.55	40	1.6	500	19.7	N/A	N/A	N/A	N/A	11,080	2,491	15,300	3,440
			+0/-.011		+0/-.0004																	Cylindrical									
MCFE 32	MCFE 32 S MCFE 32 SB MCFE 32 SX MCFE 32 SBX	32.000	+0/-.050	1.2598	+0/-.002	14.000	+0/-.12	.5512	+0/-.005	12.000	+0/-.018	.4724	+0/-.0007	25	.9	.60	.024	14.0	.55	40	1.6	500	19.7	0.5	.02	11	0.43	15	.59		
			+0/-.011		+0/-.0004																	Cylindrical									
MCFR 32 MCFR 32 B MCFR 32 X MCFR 32 BX	MCFR 32 S MCFR 32 SB MCFR 32 SX MCFR 32 SBX	32.000	+0/-.050	1.2598	+0/-.002	14.000	+0/-.12	.5512	+0/-.005	12.000	+0/-.018	.4724	+0/-.0007	25	.9	.60	.024	14.0	.55	40	1.6	500	19.7	N/A	N/A	N/A	N/A	6,860	1,542	8,050	1,810
			+0/-.011		+0/-.0004																	Cylindrical									
MCFRE 32	MCFRE 32 S MCFRE 32 SB MCFRE 32 SX MCFRE 32 SBX	32.000	+0/-.050	1.2598	+0/-.002	14.000	+0/-.12	.5512	+0/-.005	12.000	+0/-.018	.4724	+0/-.0007	25	.9	.60	.024	14.0	.55	40	1.6	500	19.7	0.5	.02	11	0.43	15	.59		
			+0/-.011		+0/-.0004																	Cylindrical									

1. Standard bearing has a crowned roller outside diameter. For straight cylindrical outside roller diameter, add suffix "X". Example - MCFR-35-X or MCF-35-SX.
2. Clamping torque is based on dry threads. If threads are lubricated, use half of value shown.
3. Static load rating is based on stud strength or on internal rolling element load distribution stresses.
4. Dynamic load should not exceed 50% of Dynamic Rating as a track roller.
5. Since load, lubrication method, temperature and other factors affect the maximum operating speed, it is impossible to determine precise limiting speed. The listed limiting speeds are based on lightly loaded bearings having adequate lubrication and are listed only as a design guide. More frequent relubrication is required when operating at higher speeds. Actual bearing testing in the specific application should be conducted if the anticipated operating speed approaches the listed limiting speed.

Inch dimensions for reference only.
Not all parts are available from stock. Please contact customer service for availability (800) 626-2120.
For more information on bearing capabilities outside of our standard offering, please contact Application Engineering (800) 626-2093.

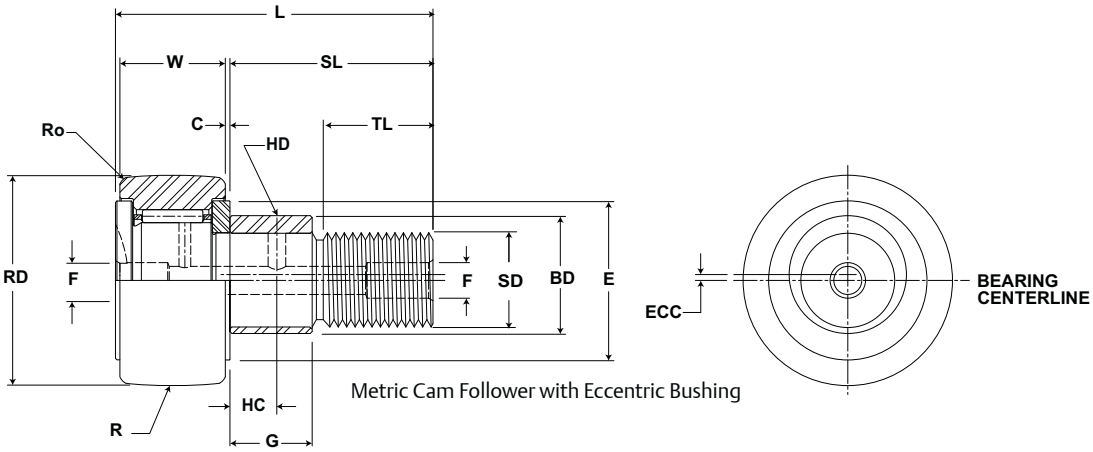

Metric Cam Follower with Eccentric Bushing

MCF, MCFE

Part No.		HC	HD	F	H	Ro	E	Housing Bore Diameter		Thread Type	Clamping Torque	Limiting Speed (Grease)	WT
W/O Seals	With LUBRI-DISC Seals	Hole Center	Radial Lub. Hole Diameter	Lub. Hole Dia	Hex Hole Suffix MCF_xx B	Outer Corner	Min. Clamping Diameter						Bearing Weight
		mm inch		mm inch		mm inch		mm inch			Nm in-lb	RPM	kg lb
		(Ref)	(Ref)	(Ref)	(Ref)	(Ref)	(Ref)	Nom.	Tol.				
MCF 30	MCF 30 S	6 .236	3 .118	6 .24	N/A	1.0 .04	19 .7	12.000 .4724	+.018/-0 +.0007/- 0	M12x1.5	22 195	6,400	.09 .20
MCF 30 B	MCF 30 SB			-	6 .24								
MCF 30 X	MCF 30 SX			6 .24	N/A								
MCF 30 BX	MCF 30 SBX			-	6 .24								
MCFE 30	MCFE 30 S	N/A	N/A	6 .24	N/A	1.0 .04	19 .7	15.050 .5925	+0.025/-0 +0.0009/- 0	M12x1.5	22 195	6,400	.09 .20
	MCFE 30 SB			-	6 .24								
	MCFE 30 SX			6 .24	N/A								
	MCFE 30 SBX			-	6 .24								
MCFR 30	MCFR 30 S	6 .236	3 .118	6 .24	N/A	1.0 .04	19 .7	12.000 .4724	+.018/-0 +.0007/- 0	M12x1.5	22 195	9,600	.09 .20
MCFR 30 B	MCFR 30 SB			-	6 .24								
MCFR 30 X	MCFR 30 SX			6 .24	N/A								
MCFR 30 BX	MCFR 30 SBX			-	6 .24								
MCFRE 30	MCFRE 30 S	N/A	N/A	6 .24	N/A	1.0 .04	19 .7	15.050 .5925	+0.025/-0 +0.0009/- 0	M12x1.5	22 195	9,600	.09 .20
	MCFRE 30 SB			-	6 .24								
	MCFRE 30 SX			6 .24	N/A								
	MCFRE 30 SBX			-	6 .24								
MCF 32	MCF 32 S	6 .236	3 .118	6 .24	N/A	1.0 .04	21 .8	12.000 .4724	+.018/-0 +.0007/- 0	M12x1.5	57 504	6,400	.10 .22
MCF 32 B	MCF 32 SB			-	6 .24								
MCF 32 X	MCF 32 SX			6 .24	N/A								
MCF 32 BX	MCF 32 SBX			-	6 .24								
MCFE 32	MCFE 32 S	N/A	N/A	6 .24	N/A	1.0 .04	21 .8	15.050 .5925	+0.025/-0 +0.0009/- 0	M12x1.5	57 504	6,400	.10 .22
	MCFE 32 SB			-	6 .24								
	MCFE 32 SX			6 .24	N/A								
	MCFE 32 SBX			-	6 .24								
MCFR 32	MCFR 32 S	6 .236	3 .118	6 .24	N/A	1.0 .04	21 .8	12.000 .4724	+.018/-0 +.0007/- 0	M12x1.5	57 504	9,600	.10 .22
MCFR 32 B	MCFR 32 SB			-	6 .24								
MCFR 32 X	MCFR 32 SX			6 .24	N/A								
MCFR 32 BX	MCFR 32 SBX			-	6 .24								
MCFRE 32	MCFRE 32 S	N/A	N/A	6 .24	N/A	1.0 .04	21 .8	15.050 .5925	+0.025/-0 +0.0009/- 0	M12x1.5	57 504	9,600	.10 .22
	MCFRE 32 SB			-	6 .24								
	MCFRE 32 SX			6 .24	N/A								
	MCFRE 32 SBX			-	6 .24								

McGILL® Metric CAMROL Bearings

Basic Construction Type: Stud Type Crowned / Cylindrical Outside Diameter

Rolling Elements: Full Complement / Retained (Caged) Needle Roller

Bearing Material: Bearing Quality Steel

Seal Type: LUBRI-DISC®

Lubrication: Lithium Soap Grease NLGI #2

System Configuration: Concentric / Eccentric

Mounting Feature: Slot / Hex Hole

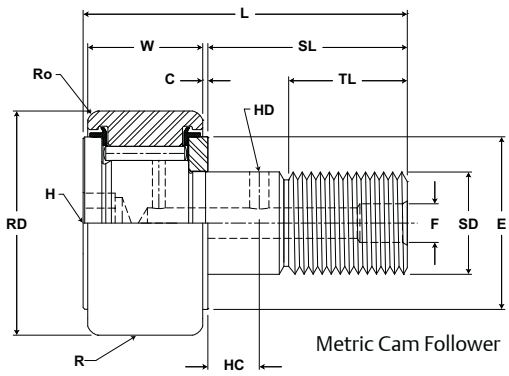

Metric Cam Follower

MCF, MCFE

Part No. W/O Seals	Part No. With LUBRI-DISC Seals	RD Roller Diameter mm Nom.	RD Roller Diameter mm Tol.	RD Roller Diameter inch Nom.	RD Roller Diameter inch Tol.	W Roller Width mm Nom.	W Roller Width mm Tol.	W Roller Width inch Nom.	W Roller Width inch Tol.	SD Stud Diameter mm Nom.	SD Stud Diameter mm Tol.	SD Stud Diameter inch Nom.	SD Stud Diameter inch Tol.	SL Stud Length mm (Ref)	SL Stud Length inch (Ref)	C Endplate Extension mm (Ref)	C Endplate Extension inch (Ref)	TL Minimum Thread Length mm (Ref)	TL Minimum Thread Length inch (Ref)	L Length Overall mm (Ref)	L Length Overall inch (Ref)	R Cylindrical Suffix MCF-xx-X mm Radius	R Cylindrical Suffix MCF-xx-X inch Radius	ECC Eccentric Base Modifier MCFE-xx mm (Ref)	ECC Eccentric Base Modifier MCFE-xx inch (Ref)	G Eccentric Base Modifier MCFE-xx mm +05/-.15	G Eccentric Base Modifier MCFE-xx inch +.002/-.006	BD Eccentric Base Modifier MCFE-xx mm (Ref)	BD Eccentric Base Modifier MCFE-xx inch (Ref)	Track Roller Dynamic Rating N/lb	Track Roller Static Rating N/lb
MCF 35	MCF 35 S	35.000	+0/-.050	1.3780	+0/-.002	18.000	+0/-.12	.7087	+0/-.005	16.000	+0/-.018	.6299	+0/-.0007	33	1.3	.80	.031	18.0	.71	52	2.0	500	19.7	N/A	N/A	N/A	N/A	16,970	28,500
MCF 35 B	MCF 35 SB																											3,815	6,407
MCF 35 X	MCF 35 SX		+0/-.011		+0/-.0004																	Cylindrical							
MCF 35 BX	MCF 35 SBX																												
MCFE 35	MCFE 35 S	35.000	+0/-.050	1.3780	+0/-.002	18.000	+0/-.12	.7087	+0/-.005	16.000	+0/-.018	.6299	+0/-.0007	33	1.3	.80	.031	18.0	.71	52	2.0	500	19.7	0.5	.02	14	0.55	20	.79	16,970	28,500
	MCFE 35 SB																											3,815	6,407
	MCFE 35 SX		+0/-.011		+0/-.0004																	Cylindrical							
	MCFE 35 SBX																												
MCFR 35	MCFR 35 S	35.000	+0/-.050	1.3780	+0/-.002	18.000	+0/-.12	.7087	+0/-.005	16.000	+0/-.018	.6299	+0/-.0007	33	1.3	.80	.031	18.0	.71	52	2.0	500	19.7	N/A	N/A	N/A	N/A	10,890	15,900
MCFR 35 B	MCFR 35 SB																											2,448	3,575
MCFR 35 X	MCFR 35 SX		+0/-.011		+0/-.0004																	Cylindrical							
MCFR 35 BX	MCFR 35 SBX																												
MCFRE 35	MCFRE 35 S	35.000	+0/-.050	1.3780	+0/-.002	18.000	+0/-.12	.7087	+0/-.005	16.000	+0/-.018	.6299	+0/-.0007	33	1.3	.80	.031	18.0	.71	52	2.0	500	19.7	0.5	.02	14	0.55	20	.79		
	MCFRE 35 SB																												
	MCFRE 35 SX		+0/-.011		+0/-.0004																	Cylindrical							
	MCFRE 35 SBX																												
MCF 40	MCF 40 S	40.000	+0/-.050	1.5748	+0/-.002	20.000	+0/-.12	.7874	+0/-.005	18.000	+0/-.018	.7087	+0/-.0007	37	1.4	.80	.031	19.0	.75	58	2.3	500	19.7	N/A	N/A	N/A	N/A	19,420	32,200
MCF 40 B	MCF 40 SB																											4,366	7,239
MCF 40 X	MCF 40 SX		+0/-.011		+0/-.0004																	Cylindrical							
MCF 40 BX	MCF 40 SBX																												
MCFE 40	MCFE 40 S	40.000	+0/-.050	1.5748	+0/-.002	20.000	+0/-.12	.7874	+0/-.005	18.000	+0/-.018	.7087	+0/-.0007	37	1.4	.80	.031	19.0	.75	58	2.3	500	19.7	1	.04	16	0.63	22	.87		
	MCFE 40 SB																												
	MCFE 40 SX		+0/-.011		+0/-.0004																	Cylindrical							
	MCFE 40 SBX																												
MCFR 40	MCFR 40 S	40.000	+0/-.050	1.5748	+0/-.002	20.000	+0/-.12	.7874	+0/-.005	18.000	+0/-.018	.7087	+0/-.0007	37	1.4	.80	.031	19.0	.75	58	2.3	500	19.7	N/A	N/A	N/A	N/A	13,340	19,800
MCFR 40 B	MCFR 40 SB																											2,999	4,451
MCFR 40 X	MCFR 40 SX		+0/-.011		+0/-.0004																	Cylindrical							
MCFR 40 BX	MCFR 40 SBX																												
MCFRE 40	MCFRE 40 S	40.000	+0/-.050	1.5748	+0/-.002	20.000	+0/-.12	.7874	+0/-.005	18.000	+0/-.018	.7087	+0/-.0007	37	1.4	.80	.031	19.0	.75	58	2.3	500	19.7	1	.04	16	0.63	22	.87		
	MCFRE 40 SB																												
	MCFRE 40 SX		+0/-.011		+0/-.0004																	Cylindrical							
	MCFRE 40 SBX																												

1. Standard bearing has a crowned roller outside diameter. For straight cylindrical outside roller diameter, add suffix "X". Example - MCFR-35-X or MCF-35-SX.
2. Clamping torque is based on dry threads. If threads are lubricated, use half of value shown.
3. Static load rating is based on stud strength or on internal rolling element load distribution stresses.
4. Dynamic load should not exceed 50% of Dynamic Rating as a track roller.
5. Since load, lubrication method, temperature and other factors affect the maximum operating speed, it is impossible to determine precise limiting speed. The listed limiting speeds are based on lightly loaded bearings having adequate lubrication and are listed only as a design guide. More frequent relubrication is required when operating at higher speeds. Actual bearing testing in the specific application should be conducted if the anticipated operating speed approaches the listed limiting speed.

Inch dimensions for reference only.
Not all parts are available from stock. Please contact customer service for availability (800) 626-2120.
For more information on bearing capabilities outside of our standard offering, please contact Application Engineering (800) 626-2093.

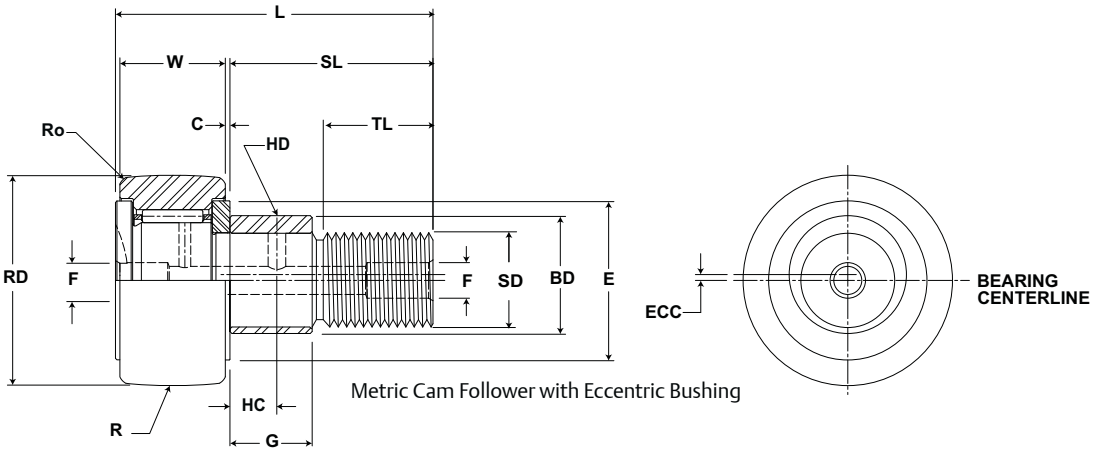

Metric Cam Follower with Eccentric Bushing

MCF, MCFE

Part No. W/O Seals	Part No. With LUBRI-DISC Seals	HC Hole Center mm inch (Ref)	HD Radial Lub. Hole Diameter mm inch (Ref)	F Lub. Hole Dia mm inch (Ref)	H Hex Hole Suffix MCF_xx B mm inch (Ref)	Ro Outer Corner mm inch (Ref)	E Min. Clamping Diameter mm inch (Ref)	Housing Bore Diameter mm inch Nom.	Housing Bore Diameter mm inch Tol.	Thread Type	Clamping Torque Nm in-lb	Limiting Speed (Grease) RPM	WT Bearing Weight kg lb
MCF 35	MCF 35 S	8 .315	3 .118	6 .24	N/A	1.0 .04	24 .9	16.000 .6299	+.018/-0 +.0007/- 0	M16x1.5	85 752	4,200	.16 .35
MCF 35 B	MCF 35 SB			-	8 .31								
MCF 35 X	MCF 35 SX			6 .24	N/A								
MCF 35 BX	MCF 35 SBX			-	8 .31								
MCFE 35	MCFE 35 S	N/A	N/A	6 .24	N/A	1.0 .04	24 .9	20.050 .7894	+0.025/-0 +0.0009/- 0	M16x1.5	85 752	4,200	.16 .35
	MCFE 35 SB			-	8 .31								
	MCFE 35 SX			6 .24	N/A								
	MCFE 35 SBX			-	8 .31								
MCFR 35	MCFR 35 S	8 .315	3 .118	6 .24	N/A	1.0 .04	24 .9	16.000 .6299	+.018/-0 +.0007/- 0	M16x1.5	85 752	6,300	.16 .35
MCFR 35 B	MCFR 35 SB			-	8 .31								
MCFR 35 X	MCFR 35 SX			6 .24	N/A								
MCFR 35 BX	MCFR 35 SBX			-	8 .31								
MCFRE 35	MCFRE 35 S	N/A	N/A	6 .24	N/A	1.0 .04	24 .9	20.050 .7894	+0.025/-0 +0.0009/- 0	M16x1.5	85 752	6,300	.16 .35
	MCFRE 35 SB			-	8 .31								
	MCFRE 35 SX			6 .24	N/A								
	MCFRE 35 SBX			-	8 .31								
MCF 40	MCF 40 S	8 .315	3 .118	6 .24	N/A	1.5 .06	27 1.1	18.000 .7087	+.018/-0 +.0007/- 0	M18x1.5	85 752	3,300	.25 .55
MCF 40 B	MCF 40 SB			-	8 .31								
MCF 40 X	MCF 40 SX			6 .24	N/A								
MCF 40 BX	MCF 40 SBX			-	8 .31								
MCFE 40	MCFE 40 S	N/A	N/A	6 .24	N/A	1.5 .06	27 1.1	22.050 .8681	+0.025/-0 +0.0009/- 0	M18x1.5	85 752	3,300	.25 .55
	MCFE 40 SB			-	8 .31								
	MCFE 40 SX			6 .24	N/A								
	MCFE 40 SBX			-	8 .31								
MCFR 40	MCFR 40 S	8 .315	3 .118	6 .24	N/A	1.5 .06	27 1.1	18.000 .7087	+.018/-0 +.0007/- 0	M18x1.5	85 752	5,000	.25 .55
MCFR 40 B	MCFR 40 SB			-	8 .31								
MCFR 40 X	MCFR 40 SX			6 .24	N/A								
MCFR 40 BX	MCFR 40 SBX			-	8 .31								
MCFRE 40	MCFRE 40 S	N/A	N/A	6 .24	N/A	1.5 .06	27 1.1	22.050 .8681	+0.025/-0 +0.0009/- 0	M18x1.5	85 752	5,000	.25 .55
	MCFRE 40 SB			-	8 .31								
	MCFRE 40 SX			6 .24	N/A								
	MCFRE 40 SBX			-	8 .31								

McGILL® Metric CAMROL Bearings

Basic Construction Type: Stud Type Crowned / Cylindrical Outside Diameter

Rolling Elements: Full Complement / Retained (Caged) Needle Roller

Bearing Material: Bearing Quality Steel

Seal Type: LUBRI-DISC®

Lubrication: Lithium Soap Grease NLGI #2

System Configuration: Concentric / Eccentric

Mounting Feature: Slot / Hex Hole

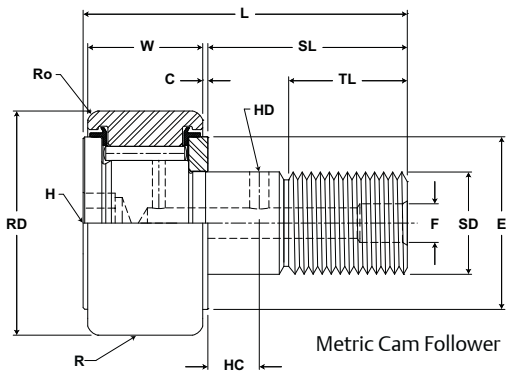

Metric Cam Follower

MCF, MCFE

Part No. W/O Seals	Part No. With LUBRI-DISC Seals	RD Roller Diameter mm Nom.	RD Roller Diameter mm Tol.	RD Roller Diameter inch Nom.	RD Roller Diameter inch Tol.	W Roller Width mm Nom.	W Roller Width mm Tol.	W Roller Width inch Nom.	W Roller Width inch Tol.	SD Stud Diameter mm Nom.	SD Stud Diameter mm Tol.	SD Stud Diameter inch Nom.	SD Stud Diameter inch Tol.	SL Stud Length mm (Ref)	SL Stud Length inch (Ref)	C Endplate Extension mm (Ref)	C Endplate Extension inch (Ref)	TL Minimum Thread Length mm (Ref)	TL Minimum Thread Length inch (Ref)	L Length Overall mm (Ref)	L Length Overall inch (Ref)	R Cylindrical Suffix MCF-xx-X mm Radius	R Cylindrical Suffix MCF-xx-X inch Radius	ECC Eccentric Base Modifier MCFE-xx mm (Ref)	ECC Eccentric Base Modifier MCFE-xx inch (Ref)	G Eccentric Base Modifier MCFE-xx mm +05/-.15	G Eccentric Base Modifier MCFE-xx inch +.002/-.006	BD Eccentric Base Modifier MCFE-xx mm (Ref)	BD Eccentric Base Modifier MCFE-xx inch (Ref)	Track Roller Dynamic Rating N/lb	Track Roller Static Rating N/lb
MCF 40A	MCF 40A S	40.000	+0/-.050	1.5748	+0/-.002	20.000	+0/-.12	.7874	+0/-.005	18.000	+0/-.018	.7087	+0/-.0007	37	1.4	.80	.031	20.0	.79	58	2.3	500	19.7	N/A	N/A	N/A	N/A	N/A	N/A	19,420	32,200
MCF 40A B	MCF 40A SB																					Cylindrical								4,366	7,239
MCF 40A X	MCF 40A SX		+0/-.011		+0/-.0004																										
MCF 40A BX	MCF 40A SBX																														
MCFE 40A	MCFE 40A S	40.000	+0/-.050	1.5748	+0/-.002	20.000	+0/-.12	.7874	+0/-.005	18.000	+0/-.018	.7087	+0/-.0007	37	1.4	.80	.031	20.0	.79	58	2.3	500	19.7	1	.04	16	0.63	22	.87	19,420	32,200
	MCFE 40A SB																					Cylindrical								4,366	7,239
	MCFE 40A SX		+0/-.011		+0/-.0004																										
	MCFE 40A SBX																														
MCFR 40A	MCFR 40A S	40.000	+0/-.050	1.5748	+0/-.002	20.000	+0/-.12	.7874	+0/-.005	18.000	+0/-.018	.7087	+0/-.0007	37	1.4	.80	.031	20.0	.79	58	2.3	500	19.7	N/A	N/A	N/A	N/A	N/A	N/A	13,340	19,800
MCFR 40A B	MCFR 40A SB																					Cylindrical								2,999	4,451
MCFR 40A X	MCFR 40A SX		+0/-.011		+0/-.0004																										
MCFR 40A BX	MCFR 40A SBX																														
MCFRE 40A	MCFRE 40A S	40.000	+0/-.050	1.5748	+0/-.002	20.000	+0/-.12	.7874	+0/-.005	18.000	+0/-.018	.7087	+0/-.0007	37	1.4	.80	.031	20.0	.79	58	2.3	500	19.7	1	.04	16	0.63	22	.87	13,340	19,800
	MCFRE 40A SB																					Cylindrical								2,999	4,451
	MCFRE 40A SX		+0/-.011		+0/-.0004																										
	MCFRE 40A SBX																														
MCF 47	MCF 47 S	47.000	+0/-.050	1.8504	+0/-.002	24.000	+0/-.12	.9449	+0/-.005	20.000	+0/-.021	.7874	+0/-.0008	41	1.6	.80	.031	21.0	.83	66	2.6	500	19.7	N/A	N/A	N/A	N/A	N/A	N/A	25,690	46,700
MCF 47 B	MCF 47 SB																					Cylindrical								5,776	10,499
MCF 47 X	MCF 47 SX		+0/-.011		+0/-.0004																										
MCF 47 BX	MCF 47 SBX																														
MCFE 47	MCFE 47 S	47.000	+0/-.050	1.8504	+0/-.002	24.000	+0/-.12	.9449	+0/-.005	20.000	+0/-.021	.7874	+0/-.0008	41	1.6	.80	.031	21.0	.83	66	2.6	500	19.7	1	.04	18	0.71	24	.94	25,690	46,700
	MCFE 47 SB																					Cylindrical								5,776	10,499
	MCFE 47 SX		+0/-.011		+0/-.0004																										
	MCFE 47 SBX																														
MCFR 47	MCFR 47 S	47.000	+0/-.050	1.8504	+0/-.002	24.000	+0/-.12	.9449	+0/-.005	20.000	+0/-.021	.7874	+0/-.0008	41	1.6	.80	.031	21.0	.83	66	2.6	500	19.7	N/A	N/A	N/A	N/A	N/A	N/A	17,750	29,800
MCFR 47 B	MCFR 47 SB																					Cylindrical								3,991	6,700
MCFR 47 X	MCFR 47 SX		+0/-.011		+0/-.0004																										
MCFR 47 BX	MCFR 47 SBX																														
MCFRE 47	MCFRE 47 S	47.000	+0/-.050	1.8504	+0/-.002	24.000	+0/-.12	.9449	+0/-.005	20.000	+0/-.021	.7874	+0/-.0008	41	1.6	.80	.031	21.0	.83	66	2.6	500	19.7	1	.04	18	0.71	24	.94	17,750	29,800
	MCFRE 47 SB																					Cylindrical								3,991	6,700
	MCFRE 47 SX		+0/-.011		+0/-.0004																										
	MCFRE 47 SBX																														

1. Standard bearing has a crowned roller outside diameter. For straight cylindrical outside roller diameter, add suffix "X". Example - MCFR-35-X or MCF-35-SX.
2. Clamping torque is based on dry threads. If threads are lubricated, use half of value shown.
3. Static load rating is based on stud strength or on internal rolling element load distribution stresses.
4. Dynamic load should not exceed 50% of Dynamic Rating as a track roller.
5. Since load, lubrication method, temperature and other factors affect the maximum operating speed, it is impossible to determine precise limiting speed. The listed limiting speeds are based on lightly loaded bearings having adequate lubrication and are listed only as a design guide. More frequent relubrication is required when operating at higher speeds. Actual bearing testing in the specific application should be conducted if the anticipated operating speed approaches the listed limiting speed.

Inch dimensions for reference only.
Not all parts are available from stock. Please contact customer service for availability (800) 626-2120.
For more information on bearing capabilities outside of our standard offering, please contact Application Engineering (800) 626-2093.

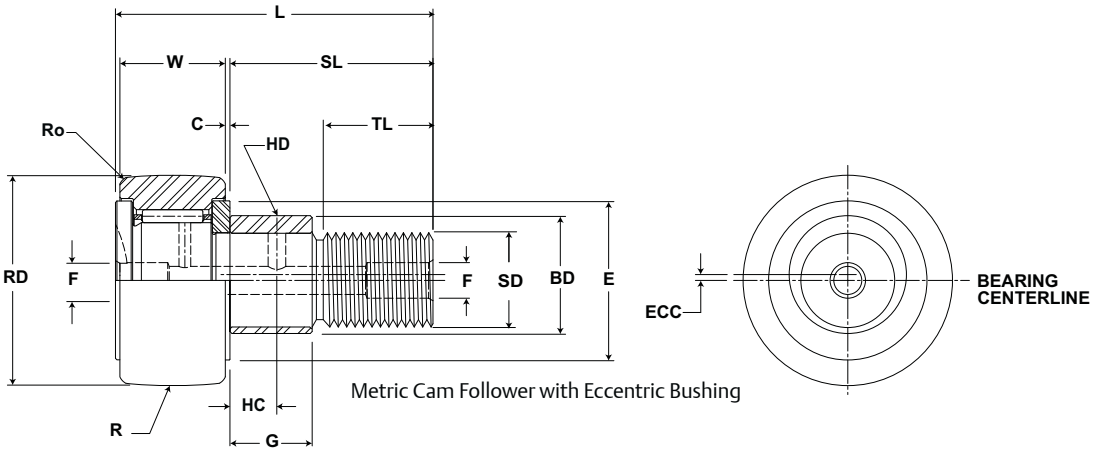

Metric Cam Follower with Eccentric Bushing

MCF, MCFE

Part No.		HC	HD	F	H	Ro	E	Housing Bore Diameter		Thread Type	Clamping Torque	Limiting Speed (Grease)	WT
W/O Seals	With LUBRI-DISC Seals	Hole Center	Radial Lub. Hole Diameter	Lub. Hole Dia	Hex Hole Suffix MCF_xx B	Outer Corner	Min. Clamping Diameter						Bearing Weight
		mm inch		mm inch		mm inch		mm inch			Nm in-lb	RPM	kg lb
		(Ref)	(Ref)	(Ref)	(Ref)	(Ref)	(Ref)	Nom.	Tol.				
MCF 40A	MCF 40A S	10 .394	3 .118	6 .24	N/A	1.5 .06	27 1.1	18.000 .7087	+.018/-0 +.0007/- 0	M18x1.5	118 1,044	3,300	.25 .55
MCF 40A B	MCF 40A SB			-	8 .31								
MCF 40A X	MCF 40A SX			6 .24	N/A								
MCF 40A BX	MCF 40A SBX			-	8 .31								
MCFE 40A	MCFE 40A S	N/A	N/A	6 .24	N/A	1.5 .06	27 1.1	22.050 .8681	+0.025/-0 +0.0009/- 0	M18x1.5	118 1,044	3,300	.25 .55
	MCFE 40A SB			-	8 .31								
	MCFE 40A SX			6 .24	N/A								
	MCFE 40A SBX			-	8 .31								
MCFR 40A	MCFR 40A S	10 .394	3 .118	6 .24	N/A	1.5 .06	27 1.1	18.000 .7087	+.018/-0 +.0007/- 0	M18x1.5	118 1,044	5,000	.25 .55
MCFR 40A B	MCFR 40A SB			-	8 .31								
MCFR 40A X	MCFR 40A SX			6 .24	N/A								
MCFR 40A BX	MCFR 40A SBX			-	8 .31								
MCFRE 40A	MCFRE 40A S	N/A	N/A	6 .24	N/A	1.5 .06	27 1.1	22.050 .8681	+0.025/-0 +0.0009/- 0	M18x1.5	118 1,044	5,000	.25 .55
	MCFRE 40A SB			-	8 .31								
	MCFRE 40A SX			6 .24	N/A								
	MCFRE 40A SBX			-	8 .31								
MCF 47	MCF 47 S	9 .354	4 .157	8 .31	N/A	1.5 .06	30 1.2	20.000 .7874	+.021/-0 +.0008/- 0	M20x1.5	118 1,044	2,600	.39 .86
MCF 47 B	MCF 47 SB			-	10 .39								
MCF 47 X	MCF 47 SX			8 .31	N/A								
MCF 47 BX	MCF 47 SBX			-	10 .39								
MCFE 47	MCFE 47 S	N/A	N/A	8 .31	N/A	1.5 .06	30 1.2	24.050 .9469	+0.025/-0 +0.0009/- 0	M20x1.5	118 1,044	2,600	.39 .86
	MCFE 47 SB			-	10 .39								
	MCFE 47 SX			8 .31	N/A								
	MCFE 47 SBX			-	10 .39								
MCFR 47	MCFR 47 S	9 .354	4 .157	8 .31	N/A	1.5 .06	30 1.2	20.000 .7874	+.021/-0 +.0008/- 0	M20x1.5	118 1,044	3,900	.39 .86
MCFR 47 B	MCFR 47 SB			-	10 .39								
MCFR 47 X	MCFR 47 SX			8 .31	N/A								
MCFR 47 BX	MCFR 47 SBX			-	10 .39								
MCFRE 47	MCFRE 47 S	N/A	N/A	8 .31	N/A	1.5 .06	30 1.2	24.050 .9469	+0.025/-0 +0.0009/- 0	M20x1.5	118 1,044	3,900	.39 .86
	MCFRE 47 SB			-	10 .39								
	MCFRE 47 SX			8 .31	N/A								
	MCFRE 47 SBX			-	10 .39								

McGILL® Metric CAMROL Bearings

Basic Construction Type: Stud Type Crowned / Cylindrical Outside Diameter

Rolling Elements: Full Complement / Retained (Caged) Needle Roller

Bearing Material: Bearing Quality Steel

Seal Type: LUBRI-DISC®

Lubrication: Lithium Soap Grease NLGI #2

System Configuration: Concentric / Eccentric

Mounting Feature: Slot / Hex Hole

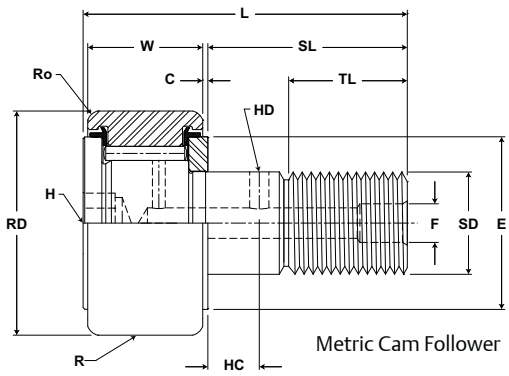

Metric Cam Follower

MCF, MCFE

Part No. W/O Seals	Part No. With LUBRI-DISC Seals	RD Roller Diameter mm Nom.	RD Roller Diameter mm Tol.	RD Roller Diameter inch Nom.	RD Roller Diameter inch Tol.	W Roller Width mm Nom.	W Roller Width mm Tol.	W Roller Width inch Nom.	W Roller Width inch Tol.	SD Stud Diameter mm Nom.	SD Stud Diameter mm Tol.	SD Stud Diameter inch Nom.	SD Stud Diameter inch Tol.	SL Stud Length mm (Ref)	SL Stud Length inch (Ref)	C Endplate Extension mm (Ref)	C Endplate Extension inch (Ref)	TL Minimum Thread Length mm (Ref)	TL Minimum Thread Length inch (Ref)	L Length Overall mm (Ref)	L Length Overall inch (Ref)	R Cylindrical Suffix MCF-xx-X mm Radius	R Cylindrical Suffix MCF-xx-X inch Radius	ECC Eccentric Base Modifier MCFE-xx mm (Ref)	ECC Eccentric Base Modifier MCFE-xx inch (Ref)	G Eccentric Base Modifier MCFE-xx mm +05/-.15	G Eccentric Base Modifier MCFE-xx inch +.002/-.006	BD Eccentric Base Modifier MCFE-xx mm (Ref)	BD Eccentric Base Modifier MCFE-xx inch (Ref)	Track Roller Dynamic Rating N/lb	Track Roller Static Rating N/lb
MCF 47A	MCF 47A S	47.000	+0/-.050	1.8504	+0/-.002	24.000	+0/-.12	.9449	+0/-.005	20.000	+0/-.021	.7874	+0/-.0008	41	1.6	.80	.031	22.0	.87	66	2.6	500	19.7	N/A	N/A	N/A	N/A	N/A	N/A	25,690	46,700
MCF 47A B	MCF 47A SB																					Cylindrical								5,776	10,499
MCF 47A X	MCF 47A SX		+0/-.011		+0/-.0004																										
MCF 47A BX	MCF 47A SBX																														
MCFE 47A	MCFE 47A S	47.000	+0/-.050	1.8504	+0/-.002	24.000	+0/-.12	.9449	+0/-.005	20.000	+0/-.021	.7874	+0/-.0008	41	1.6	.80	.031	22.0	.87	66	2.6	500	19.7	1	.04	18	0.71	24	.94	25,690	46,700
	MCFE 47A SB																					Cylindrical								5,776	10,499
	MCFE 47A SX		+0/-.011		+0/-.0004																										
	MCFE 47A SBX																														
MCFR 47A	MCFR 47A S	47.000	+0/-.050	1.8504	+0/-.002	24.000	+0/-.12	.9449	+0/-.005	20.000	+0/-.021	.7874	+0/-.0008	41	1.6	.80	.031	22.0	.87	66	2.6	500	19.7	N/A	N/A	N/A	N/A	N/A	N/A	17,750	29,800
MCFR 47A B	MCFR 47A SB																					Cylindrical								3,991	6,700
MCFR 47A X	MCFR 47A SX		+0/-.011		+0/-.0004																										
MCFR 47A BX	MCFR 47A SBX																														
MCFRE 47A	MCFRE 47A S	47.000	+0/-.050	1.8504	+0/-.002	24.000	+0/-.12	.9449	+0/-.005	20.000	+0/-.021	.7874	+0/-.0008	41	1.6	.80	.031	22.0	.87	66	2.6	500	19.7	1	.04	18	0.71	24	.94	17,750	29,800
	MCFRE 47A SB																					Cylindrical								3,991	6,700
	MCFRE 47A SX		+0/-.011		+0/-.0004																										
	MCFRE 47A SBX																														
MCF 52	MCF 52 S	52.000	+0/-.050	2.0472	+0/-.002	24.000	+0/-.12	.9449	+0/-.005	20.000	+0/-.021	.7874	+0/-.0008	41	1.6	.80	.031	21.0	.83	66	2.6	500	19.7	N/A	N/A	N/A	N/A	N/A	N/A	25,690	46,700
MCF 52 B	MCF 52 SB																					Cylindrical								5,776	10,499
MCF 52 X	MCF 52 SX		+0/-.013		+0/-.0005																										
MCF 52 BX	MCF 52 SBX																														
MCFE 52	MCFE 52 S	52.000	+0/-.050	2.0472	+0/-.002	24.000	+0/-.12	.9449	+0/-.005	20.000	+0/-.021	.7874	+0/-.0008	41	1.6	.80	.031	21.0	.83	66	2.6	500	19.7	1	.04	18	0.71	24	.94	25,690	46,700
	MCFE 52 SB																					Cylindrical								5,776	10,499
	MCFE 52 SX		+0/-.013		+0/-.0005																										
	MCFE 52 SBX																														
MCFR 52	MCFR 52 S	52.000	+0/-.050	2.0472	+0/-.002	24.000	+0/-.12	.9449	+0/-.005	20.000	+0/-.021	.7874	+0/-.0008	41	1.6	.80	.031	21.0	.83	66	2.6	500	19.7	N/A	N/A	N/A	N/A	N/A	N/A	17,750	29,800
MCFR 52 B	MCFR 52 SB																					Cylindrical								3,991	6,700
MCFR 52 X	MCFR 52 SX		+0/-.013		+0/-.0005																										
MCFR 52 BX	MCFR 52 SBX																														
MCFRE 52	MCFRE 52 S	52.000	+0/-.050	2.0472	+0/-.002	24.000	+0/-.12	.9449	+0/-.005	20.000	+0/-.021	.7874	+0/-.0008	41	1.6	.80	.031	21.0	.83	66	2.6	500	19.7	1	.04	18	0.71	24	.94	17,750	29,800
	MCFRE 52 SB																					Cylindrical								3,991	6,700
	MCFRE 52 SX		+0/-.013		+0/-.0005																										
	MCFRE 52 SBX																														

1. Standard bearing has a crowned roller outside diameter. For straight cylindrical outside roller diameter, add suffix "X". Example - MCFR-35-X or MCF-35-SX.
2. Clamping torque is based on dry threads. If threads are lubricated, use half of value shown.
3. Static load rating is based on stud strength or on internal rolling element load distribution stresses.
4. Dynamic load should not exceed 50% of Dynamic Rating as a track roller.
5. Since load, lubrication method, temperature and other factors affect the maximum operating speed, it is impossible to determine precise limiting speed. The listed limiting speeds are based on lightly loaded bearings having adequate lubrication and are listed only as a design guide. More frequent relubrication is required when operating at higher speeds. Actual bearing testing in the specific application should be conducted if the anticipated operating speed approaches the listed limiting speed.

Inch dimensions for reference only.
Not all parts are available from stock. Please contact customer service for availability (800) 626-2120.
For more information on bearing capabilities outside of our standard offering, please contact Application Engineering (800) 626-2093.

Bearing Selection Page B-3 | Nomenclature Aid Page B-62 | Features & Benefits Page B-63 | Product Options Page B-66 | Technical Engineering Page B-143

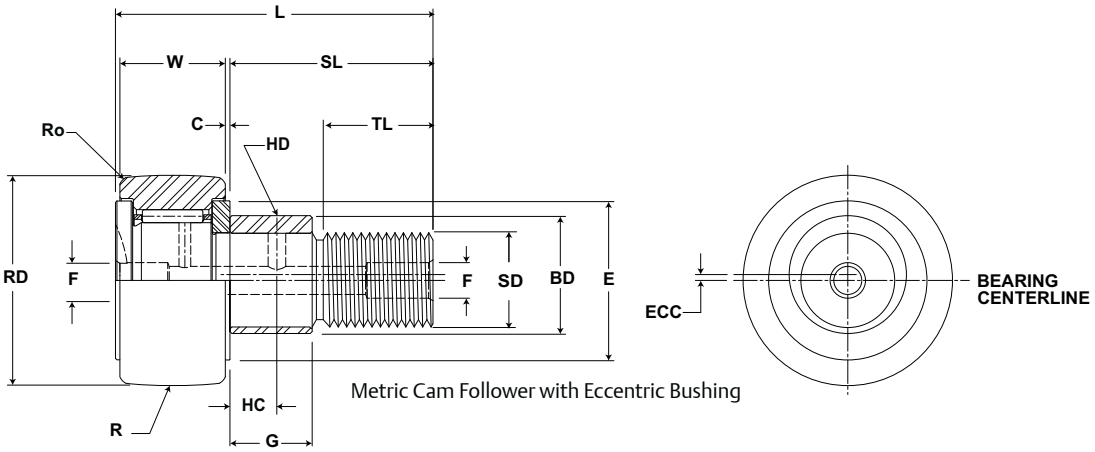

Metric Cam Follower with Eccentric Bushing

MCF, MCFE

Part No. W/O Seals	Part No. With LUBRI-DISC Seals	HC Hole Center mm inch (Ref)	HD Radial Lub. Hole Diameter mm inch (Ref)	F Lub. Hole Dia mm inch (Ref)	H Hex Hole Suffix MCF_xx B mm inch (Ref)	Ro Outer Corner mm inch (Ref)	E Min. Clamping Diameter mm inch (Ref)	Housing Bore Diameter mm inch Nom.	Housing Bore Diameter mm inch Tol.	Thread Type	Clamping Torque Nm in-lb	Limiting Speed (Grease) RPM	WT Bearing Weight kg lb
MCF 47A	MCF 47A S	12 .472	4 .157	8 .31	N/A	1.5 .06	30 1.2	20.000 .7874	+.021/-0 +.0008/- 0	M20x1.5	118 1,044	2,600	.39 .86
MCF 47A B	MCF 47A SB			-	10 .39								
MCF 47A X	MCF 47A SX			8 .31	N/A								
MCF 47A BX	MCF 47A SBX			-	10 .39								
MCFE 47A	MCFE 47A S	N/A	N/A	8 .31	N/A	1.5 .06	30 1.2	24.050 .9469	+0.025/-0 +0.0009/- 0	M20x1.5	118 1,044	2,600	.39 .86
	MCFE 47A SB			-	10 .39								
	MCFE 47A SX			8 .31	N/A								
	MCFE 47A SBX			-	10 .39								
MCFR 47A	MCFR 47A S	12 .472	4 .157	8 .31	N/A	1.5 .06	30 1.2	20.000 .7874	+.021/-0 +.0008/- 0	M20x1.5	118 1,044	3,900	.39 .86
MCFR 47A B	MCFR 47A SB			-	10 .39								
MCFR 47A X	MCFR 47A SX			8 .31	N/A								
MCFR 47A BX	MCFR 47A SBX			-	10 .39								
MCFRE 47A	MCFRE 47A S	N/A	N/A	8 .31	N/A	1.5 .06	30 1.2	24.050 .9469	+0.025/-0 +0.0009/- 0	M20x1.5	118 1,044	3,900	.39 .86
	MCFRE 47A SB			-	10 .39								
	MCFRE 47A SX			8 .31	N/A								
	MCFRE 47A SBX			-	10 .39								
MCF 52	MCF 52 S	9 .354	4 .157	8 .31	N/A	1.5 .06	36 1.4	20.000 .7874	+.021/-0 +.0008/- 0	M20x1.5	118 1,044	2,600	.45 .99
MCF 52 B	MCF 52 SB			-	10 .39								
MCF 52 X	MCF 52 SX			8 .31	N/A								
MCF 52 BX	MCF 52 SBX			-	10 .39								
MCFE 52	MCFE 52 S	N/A	N/A	8 .31	N/A	1.5 .06	36 1.4	24.050 .9469	+0.025/-0 +0.0009/- 0	M20x1.5	118 1,044	2,600	.45 .99
	MCFE 52 SB			-	10 .39								
	MCFE 52 SX			8 .31	N/A								
	MCFE 52 SBX			-	10 .39								
MCFR 52	MCFR 52 S	9 .354	4 .157	8 .31	N/A	1.5 .06	36 1.4	20.000 .7874	+.021/-0 +.0008/- 0	M20x1.5	118 1,044	3,900	.45 .99
MCFR 52 B	MCFR 52 SB			-	10 .39								
MCFR 52 X	MCFR 52 SX			8 .31	N/A								
MCFR 52 BX	MCFR 52 SBX			-	10 .39								
MCFRE 52	MCFRE 52 S	N/A	N/A	8 .31	N/A	1.5 .06	36 1.4	24.050 .9469	+0.025/-0 +0.0009/- 0	M20x1.5	118 1,044	3,900	.45 .99
	MCFRE 52 SB			-	10 .39								
	MCFRE 52 SX			8 .31	N/A								
	MCFRE 52 SBX			-	10 .39								

McGILL® Metric CAMROL Bearings

Basic Construction Type: Stud Type Crowned / Cylindrical Outside Diameter

Rolling Elements: Full Complement / Retained (Caged) Needle Roller

Bearing Material: Bearing Quality Steel

Seal Type: LUBRI-DISC®

Lubrication: Lithium Soap Grease NLGI #2

System Configuration: Concentric / Eccentric

Mounting Feature: Slot / Hex Hole

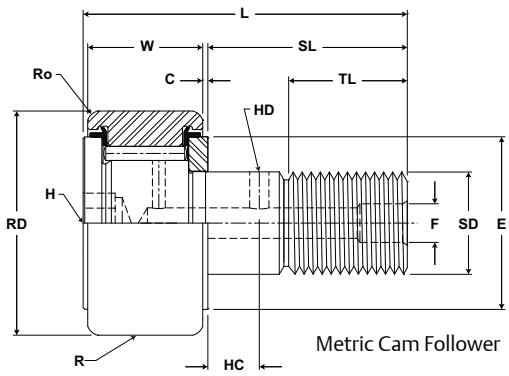

Metric Cam Follower

MCF, MCFE

Part No. W/O Seals	Part No. With LUBRI-DISC Seals	RD Roller Diameter mm Nom.	RD Roller Diameter mm Tol.	RD Roller Diameter inch Nom.	RD Roller Diameter inch Tol.	W Roller Width mm Nom.	W Roller Width mm Tol.	W Roller Width inch Nom.	W Roller Width inch Tol.	SD Stud Diameter mm Nom.	SD Stud Diameter mm Tol.	SD Stud Diameter inch Nom.	SD Stud Diameter inch Tol.	SL Stud Length mm (Ref)	SL Stud Length inch (Ref)	C Endplate Extension mm (Ref)	C Endplate Extension inch (Ref)	TL Minimum Thread Length mm (Ref)	TL Minimum Thread Length inch (Ref)	L Length Overall mm (Ref)	L Length Overall inch (Ref)	R Cylindrical Suffix MCF-xx-X mm Radius	R Cylindrical Suffix MCF-xx-X inch Radius	ECC Eccentric Base Modifier MCFE-xx mm (Ref)	ECC Eccentric Base Modifier MCFE-xx inch (Ref)	G Eccentric Base Modifier MCFE-xx mm +05/-.15	G Eccentric Base Modifier MCFE-xx inch +.002/-.006	BD Eccentric Base Modifier MCFE-xx mm (Ref)	BD Eccentric Base Modifier MCFE-xx inch (Ref)	Track Roller Dynamic Rating N/lb	Track Roller Static Rating N/lb
MCF 52A	MCF 52A S	52.000	+0/-.050	2.0472	+0/-.002	24.000	+0/-.12	.9449	+0/-.005	20.000	+0/-.021	.7874	+0/-.0008	41	1.6	.80	.031	22.0	.87	66	2.6	500	19.7	N/A	N/A	N/A			25,690	46,700
MCF 52A B	MCF 52A SB																					Cylindrical							5,776	10,499
MCF 52A X	MCF 52A SX		+0/-.013		+0/-.0005																									
MCF 52A BX	MCF 52A SBX																													
MCFE 52A	MCFE 52A S	52.000	+0/-.050	2.0472	+0/-.002	24.000	+0/-.12	.9449	+0/-.005	20.000	+0/-.021	.7874	+0/-.0008	41	1.6	.80	.031	22.0	.87	66	2.6	500	19.7	1	.04	18	0.71	24	.94		
	MCFE 52A SB																					Cylindrical									
	MCFE 52A SX		+0/-.013		+0/-.0005																									
	MCFE 52A SBX																													
MCFR 52A	MCFR 52A S	52.000	+0/-.050	2.0472	+0/-.002	24.000	+0/-.12	.9449	+0/-.005	20.000	+0/-.021	.7874	+0/-.0008	41	1.6	.80	.031	22.0	.87	66	2.6	500	19.7	N/A	N/A	N/A			17,750	29,800
MCFR 52A B	MCFR 52A SB																					Cylindrical							3,991	6,700
MCFR 52A X	MCFR 52A SX		+0/-.013		+0/-.0005																									
MCFR 52A BX	MCFR 52A SBX																													
MCFRE 52A	MCFRE 52A S	52.000	+0/-.050	2.0472	+0/-.002	24.000	+0/-.12	.9449	+0/-.005	20.000	+0/-.021	.7874	+0/-.0008	41	1.6	.80	.031	22.0	.87	66	2.6	500	19.7	1	.04	18	0.71	24	.94		
	MCFRE 52A SB																					Cylindrical									
	MCFRE 52A SX		+0/-.013		+0/-.0005																									
	MCFRE 52A SBX																													
MCF 62	MCF 62 S	62.000	+0/-.050	2.4409	+0/-.002	29.000	+0/-.12	1.1417	+0/-.005	24.000	+0/-.021	.9449	+0/-.0008	50	1.9	.80	.031	25.0	.98	80	3.1	500	19.7	N/A	N/A	N/A			38,840	65,400
MCF 62 B	MCF 62 SB																					Cylindrical							8,732	14,703
MCF 62 X	MCF 62 SX		+0/-.013		+0/-.0005																									
MCF 62 BX	MCF 62 SBX																													
MCFE 62	MCFE 62 S	62.000	+0/-.050	2.4409	+0/-.002	29.000	+0/-.12	1.1417	+0/-.005	24.000	+0/-.021	.9449	+0/-.0008	50	1.9	.80	.031	25.0	.98	80	3.1	500	19.7	1	.04	22	0.87	28	.10		
	MCFE 62 SB																					Cylindrical									
	MCFE 62 SX		+0/-.013		+0/-.0005																									
	MCFE 62 SBX																													
MCFR 62	MCFR 62 S	62.000	+0/-.050	2.4409	+0/-.002	29.000	+0/-.12	1.1417	+0/-.005	24.000	+0/-.021	.9449	+0/-.0008	50	1.9	.80	.031	25.0	.98	80	3.1	500	19.7	N/A	N/A	N/A			26,380	46,300
MCFR 62 B	MCFR 62 SB																					Cylindrical							5,931	10,409
MCFR 62 X	MCFR 62 SX		+0/-.013		+0/-.0005																									
MCFR 62 BX	MCFR 62 SBX																													
MCFRE 62	MCFRE 62 S	62.000	+0/-.050	2.4409	+0/-.002	29.000	+0/-.12	1.1417	+0/-.005	24.000	+0/-.021	.9449	+0/-.0008	50	1.9	.80	.031	25.0	.98	80	3.1	500	19.7	1	.04	22	0.87	28	.10		
	MCFRE 62 SB																					Cylindrical									
	MCFRE 62 SX		+0/-.013		+0/-.0005																									
	MCFRE 62 SBX																													

1. Standard bearing has a crowned roller outside diameter. For straight cylindrical outside roller diameter, add suffix "X". Example - MCFR-35-X or MCF-35-SX.
2. Clamping torque is based on dry threads. If threads are lubricated, use half of value shown.
3. Static load rating is based on stud strength or on internal rolling element load distribution stresses.
4. Dynamic load should not exceed 50% of Dynamic Rating as a track roller.
5. Since load, lubrication method, temperature and other factors affect the maximum operating speed, it is impossible to determine precise limiting speed. The listed limiting speeds are based on lightly loaded bearings having adequate lubrication and are listed only as a design guide. More frequent relubrication is required when operating at higher speeds. Actual bearing testing in the specific application should be conducted if the anticipated operating speed approaches the listed limiting speed.

Inch dimensions for reference only.
Not all parts are available from stock. Please contact customer service for availability (800) 626-2120.
For more information on bearing capabilities outside of our standard offering, please contact Application Engineering (800) 626-2093.

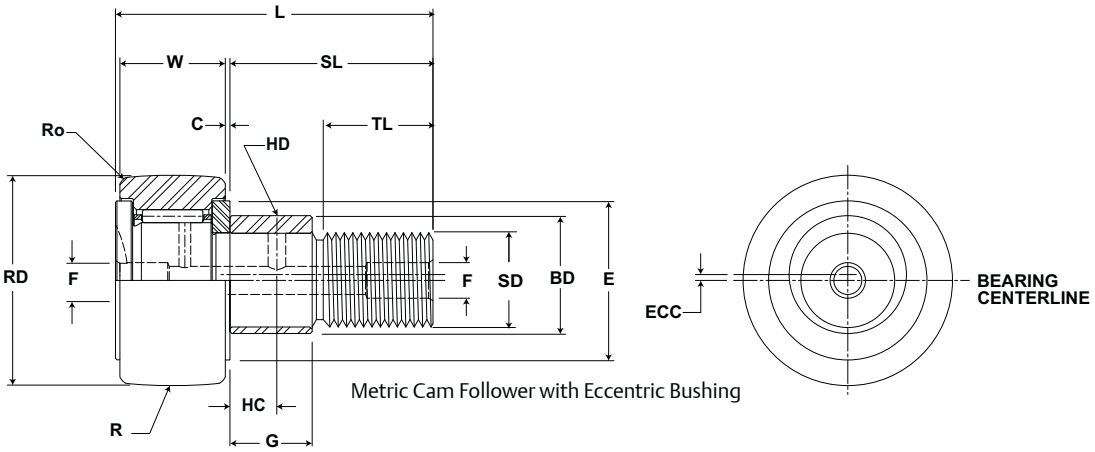

Metric Cam Follower with Eccentric Bushing

MCF, MCFE

Part No. W/O Seals	Part No. With LUBRI-DISC Seals	HC Hole Center mm inch (Ref)	HD Radial Lub. Hole Diameter mm inch (Ref)	F Lub. Hole Dia mm inch (Ref)	H Hex Hole Suffix MCF_xx B mm inch (Ref)	Ro Outer Corner mm inch (Ref)	E Min. Clamping Diameter mm inch (Ref)	Housing Bore Diameter mm inch Nom.	Housing Bore Diameter mm inch Tol.	Thread Type	Clamping Torque Nm in-lb	Limiting Speed (Grease) RPM	WT Bearing Weight kg lb
MCF 52A	MCF 52A S	12 .472	4 .157	8 .31	N/A	1.5 .06	36 1.4	20.000 .7874	+.021/-0 +.0008/- 0	M20x1.5	216 1,912	2,600	.45 .99
MCF 52A B	MCF 52A SB			-	10 .39								
MCF 52A X	MCF 52A SX			8 .31	N/A								
MCF 52A BX	MCF 52A SBX			-	10 .39								
MCFE 52A	MCFE 52A S	N/A	N/A	8 .31	N/A	1.5 .06	36 1.4	24.050 .9469	+0.025/-0 +0.0009/- 0	M20x1.5	216 1,912	2,600	.45 .99
	MCFE 52A SB			-	10 .39								
	MCFE 52A SX			8 .31	N/A								
	MCFE 52A SBX			-	10 .39								
MCFR 52A	MCFR 52A S	12 .472	4 .157	8 .31	N/A	1.5 .06	36 1.4	20.000 .7874	+.021/-0 +.0008/- 0	M20x1.5	216 1,912	3,900	.45 .99
MCFR 52A B	MCFR 52A SB			-	10 .39								
MCFR 52A X	MCFR 52A SX			8 .31	N/A								
MCFR 52A BX	MCFR 52A SBX			-	10 .39								
MCFRE 52A	MCFRE 52A S	N/A	N/A	8 .31	N/A	1.5 .06	36 1.4	24.050 .9469	+0.025/-0 +0.0009/- 0	M20x1.5	216 1,912	3,900	.45 .99
	MCFRE 52A SB			-	10 .39								
	MCFRE 52A SX			8 .31	N/A								
	MCFRE 52A SBX			-	10 .39								
MCF 62	MCF 62 S	11 .433	4 .157	8 .31	N/A	2.0 .08	44 1.7	24.000 .9449	+.021/-0 +.0008/- 0	M24x1.5	216 1,912	2,100	.81 1.79
MCF 62 B	MCF 62 SB			-	14 .55								
MCF 62 X	MCF 62 SX			8 .31	N/A								
MCF 62 BX	MCF 62 SBX			-	14 .55								
MCFE 62	MCFE 62 S	N/A	N/A	8 .31	N/A	2.0 .08	63 2.5	28.050 .1043	+0.025/-0 +0.0009/- 0	M24x1.5	216 1,912	2,100	.81 1.79
	MCFE 62 SB			-	14 .55								
	MCFE 62 SX			8 .31	N/A								
	MCFE 62 SBX			-	14 .55								
MCFR 62	MCFR 62 S	11 .433	4 .157	8 .31	N/A	2.0 .08	63 2.5	24.000 .9449	+.021/-0 +.0008/- 0	M24x1.5	216 1,912	3,100	.81 1.79
MCFR 62 B	MCFR 62 SB			-	14 .55								
MCFR 62 X	MCFR 62 SX			8 .31	N/A								
MCFR 62 BX	MCFR 62 SBX			-	14 .55								
MCFRE 62	MCFRE 62 S	N/A	N/A	8 .31	N/A	2.0 .08	63 2.5	28.050 .1043	+0.025/-0 +0.0009/- 0	M24x1.5	216 1,912	3,100	.81 1.79
	MCFRE 62 SB			-	14 .55								
	MCFRE 62 SX			8 .31	N/A								
	MCFRE 62 SBX			-	14 .55								

McGILL® Metric CAMROL Bearings

Basic Construction Type: Stud Type Crowned / Cylindrical Outside Diameter

Rolling Elements: Full Complement / Retained (Caged) Needle Roller

Bearing Material: Bearing Quality Steel

Seal Type: LUBRI-DISC®

Lubrication: Lithium Soap Grease NLGI #2

System Configuration: Concentric / Eccentric

Mounting Feature: Slot / Hex Hole

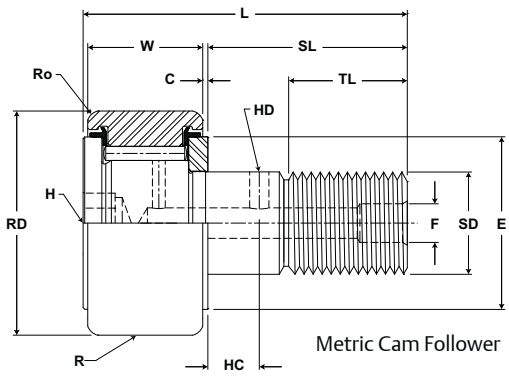

Metric Cam Follower

MCF, MCFE

Part No.		RD		W		SD		SL	C	TL	L	R	ECC	G	BD	Track Roller Dynamic Rating	Track Roller Static Rating
W/O Seals	With LUBRI-DISC Seals	Roller Diameter		Roller Width		Stud Diameter		Stud Length	Endplate Extension	Minimum Thread Length	Length Overall	Cylindrical Suffix MCF-xx-X	Eccentric Base Modifier MCFE-xx				
		mm inch		mm inch		mm inch		mm inch		mm inch		mm inch	mm inch			N/lb	N/lb
		Nom.	Tol.	Nom.	Tol.	Nom.	Tol.	(Ref)	(Ref)	(Ref)	(Ref)	Radius	(Ref)	+05/-.15 +.002/-.006	(Ref)		
MCF 62A MCF 62A B MCF 62A X MCF 62A BX	MCF 62A S MCF 62A SB MCF 62A SX MCF 62A SBX	62.000 2.4409	+0/-.050 +0/-.002 +0/-.013 +0/-.0005	29.000 1.1417	+0/-.12 +0/-.005	24.000 .9449	+0/-.021 +0/-.0008	50 1.9	.80 .031	25.0 .98	80 3.1	500 19.7 Cylindrical	N/A	N/A	N/A	38,840 8,732	65,400 14,703
MCFE 62A	MCFE 62A S MCFE 62A SB MCFE 62A SX MCFE 62A SBX	62.000 2.4409	+0/-.050 +0/-.002 +0/-.013 +0/-.0005	29.000 1.1417	+0/-.12 +0/-.005	24.000 .9449	+0/-.021 +0/-.0008	50 1.9	.80 .031	25.0 .98	80 3.1	500 19.7 Cylindrical	1 .04	22 0.87	28 .10		
MCFR 62A MCFR 62A B MCFR 62A X MCFR 62A BX	MCFR 62A S MCFR 62A SB MCFR 62A SX MCFR 62A SBX	62.000 2.4409	+0/-.050 +0/-.002 +0/-.013 +0/-.0005	29.000 1.1417	+0/-.12 +0/-.005	24.000 .9449	+0/-.021 +0/-.0008	50 1.9	.80 .031	25.0 .98	80 3.1	500 19.7 Cylindrical	N/A	N/A	N/A	26,380 5,931	46,300 10,409
MCFRE 62A	MCFRE 62A S MCFRE 62A SB MCFRE 62A SX MCFRE 62A SBX	62.000 2.4409	+0/-.050 +0/-.002 +0/-.013 +0/-.0005	29.000 1.1417	+0/-.12 +0/-.005	24.000 .9449	+0/-.021 +0/-.0008	50 1.9	.80 .031	25.0 .98	80 3.1	500 19.7 Cylindrical	1 .04	22 0.87	28 .10		
MCF 72 MCF 72 B MCF 72 X MCF 72 BX	MCF 72 S MCF 72 SB MCF 72 SX MCF 72 SBX	72.000 2.8346	+0/-.050 +0/-.002 +0/-.013 +0/-.0005	29.000 1.1417	+0/-.12 +0/-.005	24.000 .9449	+0/-.021 +0/-.0008	50 1.9	.80 .031	25.0 .98	80 3.1	500 19.7 Cylindrical	N/A	N/A	N/A	38,840 8,732	65,400 14,703
MCFE 72	MCFE 72 S MCFE 72 SB MCFE 72 SX MCFE 72 SBX	72.000 2.8346	+0/-.050 +0/-.002 +0/-.013 +0/-.0005	29.000 1.1417	+0/-.12 +0/-.005	24.000 .9449	+0/-.021 +0/-.0008	50 1.9	.80 .031	25.0 .98	80 3.1	500 19.7 Cylindrical	1 .04	22 0.87	28 .10		
MCFR 72 MCFR 72 B MCFR 72 X MCFR 72 BX	MCFR 72 S MCFR 72 SB MCFR 72 SX MCFR 72 SBX	72.000 2.8346	+0/-.050 +0/-.002 +0/-.013 +0/-.0005	29.000 1.1417	+0/-.12 +0/-.005	24.000 .9449	+0/-.021 +0/-.0008	50 1.9	.80 .031	25.0 .98	80 3.1	500 19.7 Cylindrical	N/A	N/A	N/A	26,380 5,931	46,300 10,409
MCFRE 72	MCFRE 72 S MCFRE 72 SB MCFRE 72 SX MCFRE 72 SBX	72.000 2.8346	+0/-.050 +0/-.002 +0/-.013 +0/-.0005	29.000 1.1417	+0/-.12 +0/-.005	24.000 .9449	+0/-.021 +0/-.0008	50 1.9	.80 .031	25.0 .98	80 3.1	500 19.7 Cylindrical	1 .04	22 0.87	28 .10		

1. Standard bearing has a crowned roller outside diameter. For straight cylindrical outside roller diameter, add suffix "X". Example - MCFR-35-X or MCF-35-SX.
2. Clamping torque is based on dry threads. If threads are lubricated, use half of value shown.
3. Static load rating is based on stud strength or on internal rolling element load distribution stresses.
4. Dynamic load should not exceed 50% of Dynamic Rating as a track roller.
5. Since load, lubrication method, temperature and other factors affect the maximum operating speed, it is impossible to determine precise limiting speed. The listed limiting speeds are based on lightly loaded bearings having adequate lubrication and are listed only as a design guide. More frequent relubrication is required when operating at higher speeds. Actual bearing testing in the specific application should be conducted if the anticipated operating speed approaches the listed limiting speed.

Inch dimensions for reference only.
Not all parts are available from stock. Please contact customer service for availability (800) 626-2120.
For more information on bearing capabilities outside of our standard offering, please contact Application Engineering (800) 626-2093.

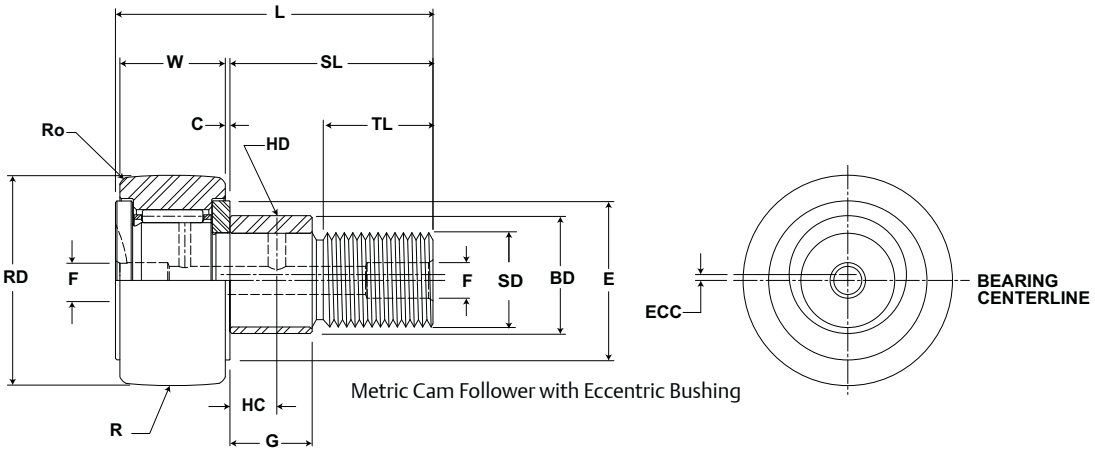

Metric Cam Follower with Eccentric Bushing

MCF, MCFE

Part No. W/O Seals	Part No. With LUBRI-DISC Seals	HC Hole Center mm inch (Ref)	HD Radial Lub. Hole Diameter mm inch (Ref)	F Lub. Hole Dia mm inch (Ref)	H Hex Hole Suffix MCF_xx B mm inch (Ref)	Ro Outer Corner mm inch (Ref)	E Min. Clamping Diameter mm inch (Ref)	Housing Bore Diameter mm inch Nom.	Housing Bore Diameter mm inch Tol.	Thread Type	Clamping Torque Nm in-lb	Limiting Speed (Grease) RPM	WT Bearing Weight kg lb
MCF 62A	MCF 62A S	12 .472	4 .157	8 .31	N/A	2.0 .08	63 2.5	24.000 .9449	+.021/-0 +.0008/- 0	M24x1.5	216 1,912	2,100	.81 1.79
MCF 62A B	MCF 62A SB			-	14 .55								
MCF 62A X	MCF 62A SX			8 .31	N/A								
MCF 62A BX	MCF 62A SBX			-	14 .55								
MCFE 62A	MCFE 62A S	N/A	N/A	8 .31	N/A	2.0 .08	63 2.5	28.050 .1043	+0.025/-0 +0.0009/- 0	M24x1.5	216 1,912	2,100	.81 1.79
	MCFE 62A SB			-	14 .55								
	MCFE 62A SX			8 .31	N/A								
	MCFE 62A SBX			-	14 .55								
MCFR 62A	MCFR 62A S	12 .472	4 .157	8 .31	N/A	2.0 .08	63 2.5	24.000 .9449	+.021/-0 +.0008/- 0	M24x1.5	216 1,912	3,100	.81 1.79
MCFR 62A B	MCFR 62A SB			-	14 .55								
MCFR 62A X	MCFR 62A SX			8 .31	N/A								
MCFR 62A BX	MCFR 62A SBX			-	14 .55								
MCFRE 62A	MCFRE 62A S	N/A	N/A	8 .31	N/A	2.0 .08	63 2.5	28.050 .1043	+0.025/-0 +0.0009/- 0	M24x1.5	216 1,912	3,100	.81 1.79
	MCFRE 62A SB			-	14 .55								
	MCFRE 62A SX			8 .31	N/A								
	MCFRE 62A SBX			-	14 .55								
MCF 72	MCF 72 S	12 .472	4 .157	8 .31	N/A	2.0 .08	63 2.5	24.000 .9449	+.021/-0 +.0008/- 0	M24x1.5	216 1,912	2,100	1.04 2.29
MCF 72 B	MCF 72 SB			-	14 .55								
MCF 72 X	MCF 72 SX			8 .31	N/A								
MCF 72 BX	MCF 72 SBX			-	14 .55								
MCFE 72	MCFE 72 S	N/A	N/A	8 .31	N/A	2.0 .08	63 2.5	28.050 .1043	+0.025/-0 +0.0009/- 0	M24x1.5	216 1,912	2,100	1.04 2.29
	MCFE 72 SB			-	14 .55								
	MCFE 72 SX			8 .31	N/A								
	MCFE 72 SBX			-	14 .55								
MCFR 72	MCFR 72 S	12 .472	4 .157	8 .31	N/A	2.0 .08	63 2.5	24.000 .9449	+.021/-0 +.0008/- 0	M24x1.5	216 1,912	3,100	1.04 2.29
MCFR 72 B	MCFR 72 SB			-	14 .55								
MCFR 72 X	MCFR 72 SX			8 .31	N/A								
MCFR 72 BX	MCFR 72 SBX			-	14 .55								
MCFRE 72	MCFRE 72 S	N/A	N/A	8 .31	N/A	2.0 .08	63 2.5	28.050 .1043	+0.025/-0 +0.0009/- 0	M24x1.5	216 1,912	3,100	1.04 2.29
	MCFRE 72 SB			-	14 .55								
	MCFRE 72 SX			8 .31	N/A								
	MCFRE 72 SBX			-	14 .55								

McGILL® Metric CAMROL Bearings

Basic Construction Type: Stud Type Crowned / Cylindrical Outside Diameter

Rolling Elements: Full Complement / Retained (Caged) Needle Roller

Bearing Material: Bearing Quality Steel

Seal Type: LUBRI-DISC®

Lubrication: Lithium Soap Grease NLGI #2

System Configuration: Concentric / Eccentric

Mounting Feature: Slot / Hex Hole

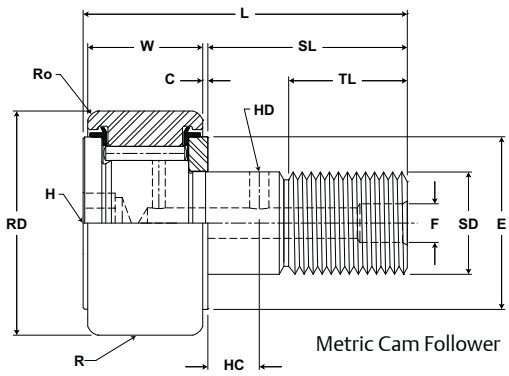

Metric Cam Follower

MCF, MCFE

Part No. W/O Seals	Part No. With LUBRI-DISC Seals	RD Roller Diameter mm Nom.	RD Roller Diameter mm Tol.	RD Roller Diameter inch Nom.	RD Roller Diameter inch Tol.	W Roller Width mm Nom.	W Roller Width mm Tol.	W Roller Width inch Nom.	W Roller Width inch Tol.	SD Stud Diameter mm Nom.	SD Stud Diameter mm Tol.	SD Stud Diameter inch Nom.	SD Stud Diameter inch Tol.	SL Stud Length mm (Ref)	SL Stud Length inch (Ref)	C Endplate Extension mm (Ref)	C Endplate Extension inch (Ref)	TL Minimum Thread Length mm (Ref)	TL Minimum Thread Length inch (Ref)	L Length Overall mm (Ref)	L Length Overall inch (Ref)	R Cylindrical Suffix MCF-xx-X mm Radius	R Cylindrical Suffix MCF-xx-X inch Radius	ECC Eccentric Base Modifier MCFE-xx mm (Ref)	ECC Eccentric Base Modifier MCFE-xx inch (Ref)	G Eccentric Base Modifier MCFE-xx mm +05/-.15	G Eccentric Base Modifier MCFE-xx inch +.002/-.006	BD Eccentric Base Modifier MCFE-xx mm (Ref)	BD Eccentric Base Modifier MCFE-xx inch (Ref)	Track Roller Dynamic Rating N/lb	Track Roller Static Rating N/lb
MCF 72A	MCF 72A S	72.000	+0/-.050	2.8346	+0/-.002	29.000	+0/-.12	1.1417	+0/-.005	24.000	+0/-.021	.9449	+0/-.0008	50	1.9	.80	.031	25.0	.98	80	3.1	500	19.7	N/A	N/A	N/A			38,840	65,400
MCF 72A B	MCF 72A SB																					Cylindrical							8,732	14,703
MCF 72A X	MCF 72A SX		+0/-.013		+0/-.0005																									
MCF 72A BX	MCF 72A SBX																													
MCFE 72A	MCFE 72A S	72.000	+0/-.050	2.8346	+0/-.002	29.000	+0/-.12	1.1417	+0/-.005	24.000	+0/-.021	.9449	+0/-.0008	50	1.9	.80	.031	25.0	.98	80	3.1	500	19.7	1	.04	22	0.87	28	.10		
	MCFE 72A SB																					Cylindrical								
	MCFE 72A SX		+0/-.013		+0/-.0005																									
	MCFE 72A SBX																													
MCFR 72A	MCFR 72A S	72.000	+0/-.050	2.8346	+0/-.002	29.000	+0/-.12	1.1417	+0/-.005	24.000	+0/-.021	.9449	+0/-.0008	50	1.9	.80	.031	25.0	.98	80	3.1	500	19.7	N/A	N/A	N/A			26,380	46,300
MCFR 72A B	MCFR 72A SB																					Cylindrical							5,931	10,409
MCFR 72A X	MCFR 72A SX		+0/-.013		+0/-.0005																									
MCFR 72A BX	MCFR 72A SBX																													
MCFRE 72A	MCFRE 72A S	72.000	+0/-.050	2.8346	+0/-.002	29.000	+0/-.12	1.1417	+0/-.005	24.000	+0/-.021	.9449	+0/-.0008	50	1.9	.80	.031	25.0	.98	80	3.1	500	19.7	1	.04	22	0.87	28	.10		
	MCFRE 72A SB																					Cylindrical								
	MCFRE 72A SX		+0/-.013		+0/-.0005																									
	MCFRE 72A SBX																													
MCF 80	MCF 80 S	80.000	+0/-.050	3.1496	+0/-.002	35.000	+0/-.12	1.3780	+0/-.005	30.000	+0/-.021	1.1811	+0/-.0008	63	2.5	1.00	.039	32.0	1.26	100	3.9	500	19.7	N/A	N/A	N/A			64,140	102,300
MCF 80 B	MCF 80 SB																					Cylindrical							14,420	22,999
MCF 80 X	MCF 80 SX		+0/-.015		+0/-.0006																									
MCF 80 BX	MCF 80 SBX																													
MCFE 80	MCFE 80 S	80.000	+0/-.050	3.1496	+0/-.002	35.000	+0/-.12	1.3780	+0/-.005	30.000	+0/-.021	1.1811	+0/-.0008	63	2.5	1.00	.039	32.0	1.26	100	3.9	500	19.7	1.5	.06	29	1.14	35	.38		
	MCFE 80 SB																					Cylindrical								
	MCFE 80 SX		+0/-.015		+0/-.0006																									
	MCFE 80 SBX																													
MCFR 80A	MCFR 80A S	80.000	+0/-.050	3.1496	+0/-.002	35.000	+0/-.12	1.3780	+0/-.005	30.000	+0/-.021	1.1811	+0/-.0008	63	2.5	1.00	.039	32.0	1.26	100	3.9	500	19.7	N/A	N/A	N/A			46,680	87,600
MCFR 80A B	MCFR 80A SB																					Cylindrical							10,495	19,694
MCFR 80A X	MCFR 80A SX		+0/-.015		+0/-.0006																									
MCFR 80A BX	MCFR 80A SBX																													
MCFRE 80A	MCFRE 80A S	80.000	+0/-.050	3.1496	+0/-.002	35.000	+0/-.12	1.3780	+0/-.005	30.000	+0/-.021	1.1811	+0/-.0008	63	2.5	1.00	.039	32.0	1.26	100	3.9	500	19.7	1.5	.06	29	1.14	35	.38		
	MCFRE 80A SB																					Cylindrical								
	MCFRE 80A SX		+0/-.015		+0/-.0006																									
	MCFRE 80A SBX																													

1. Standard bearing has a crowned roller outside diameter. For straight cylindrical outside roller diameter, add suffix "X". Example - MCFR-35-X or MCF-35-SX.
2. Clamping torque is based on dry threads. If threads are lubricated, use half of value shown.
3. Static load rating is based on stud strength or on internal rolling element load distribution stresses.
4. Dynamic load should not exceed 50% of Dynamic Rating as a track roller.
5. Since load, lubrication method, temperature and other factors affect the maximum operating speed, it is impossible to determine precise limiting speed. The listed limiting speeds are based on lightly loaded bearings having adequate lubrication and are listed only as a design guide. More frequent relubrication is required when operating at higher speeds. Actual bearing testing in the specific application should be conducted if the anticipated operating speed approaches the listed limiting speed.

Inch dimensions for reference only.
Not all parts are available from stock. Please contact customer service for availability (800) 626-2120.
For more information on bearing capabilities outside of our standard offering, please contact Application Engineering (800) 626-2093.

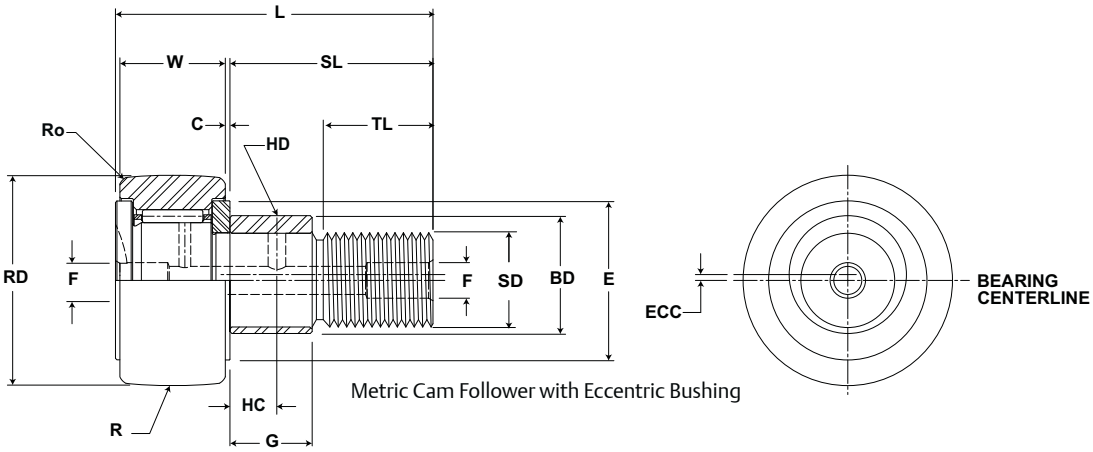

Metric Cam Follower with Eccentric Bushing

MCF, MCFE

Part No. W/O Seals	Part No. With LUBRI-DISC Seals	HC Hole Center mm inch (Ref)	HD Radial Lub. Hole Diameter mm inch (Ref)	F Lub. Hole Dia mm inch (Ref)	H Hex Hole Suffix MCF_xx B mm inch (Ref)	Ro Outer Corner mm inch (Ref)	E Min. Clamping Diameter mm inch (Ref)	Housing Bore Diameter mm inch Nom.	Housing Bore Diameter mm inch Tol.	Thread Type	Clamping Torque Nm in-lb	Limiting Speed (Grease) RPM	WT Bearing Weight kg lb
MCF 72A	MCF 72A S	11 .433	4 .157	8 .31	N/A	2.0 .08	63 2.5	24.000 .9449	+.021/-0 +.0008/- 0	M24x1.5	216 1,912	2,100	1.04 2.29
MCF 72A B	MCF 72A SB			-	14 .55								
MCF 72A X	MCF 72A SX			8 .31	N/A								
MCF 72A BX	MCF 72A SBX			-	14 .55								
MCFE 72A	MCFE 72A S	N/A	N/A	8 .31	N/A	2.0 .08	63 2.5	28.050 .1043	+0.025/-0 +0.0009/- 0	M24x1.5	216 1,912	2,100	1.04 2.29
	MCFE 72A SB			-	14 .55								
	MCFE 72A SX			8 .31	N/A								
	MCFE 72A SBX			-	14 .55								
MCFR 72A	MCFR 72A S	11 .433	4 .157	8 .31	N/A	2.0 .08	63 2.5	24.000 .9449	+.021/-0 +.0008/- 0	M24x1.5	216 1,912	3,100	1.04 2.29
MCFR 72A B	MCFR 72A SB			-	14 .55								
MCFR 72A X	MCFR 72A SX			8 .31	N/A								
MCFR 72A BX	MCFR 72A SBX			-	14 .55								
MCFRE 72A	MCFRE 72A S	N/A	N/A	8 .31	N/A	2.0 .08	63 2.5	28.050 .1043	+0.025/-0 +0.0009/- 0	M24x1.5	216 1,912	3,100	1.04 2.29
	MCFRE 72A SB			-	14 .55								
	MCFRE 72A SX			8 .31	N/A								
	MCFRE 72A SBX			-	14 .55								
MCF 80	MCF 80 S	15 .591	4 .157	8 .31	N/A	2.0 .08	63 2.5	30.000 .1811	+.021/-0 +.0008/- 0	M30x1.5	441 3,903	1,500	1.64 3.62
MCF 80 B	MCF 80 SB			-	14 .55								
MCF 80 X	MCF 80 SX			8 .31	N/A								
MCF 80 BX	MCF 80 SBX			-	14 .55								
MCFE 80	MCFE 80 S	N/A	N/A	8 .31	N/A	2.0 .08	63 2.5	35.050 .3799	+0.025/-0 +0.0009/- 0	M30x1.5	441 3,903	2,200	1.64 3.62
	MCFE 80 SB			-	14 .55								
	MCFE 80 SX			8 .31	N/A								
	MCFE 80 SBX			-	14 .55								
MCFR 80A	MCFR 80A S	15 .591	4 .157	8 .31	N/A	2.0 .08	63 2.5	30.000 .1811	+.021/-0 +.0008/- 0	M30x1.5	441 3,903	2,200	1.64 3.62
MCFR 80A B	MCFR 80A SB			-	14 .55								
MCFR 80A X	MCFR 80A SX			8 .31	N/A								
MCFR 80A BX	MCFR 80A SBX			-	14 .55								
MCFRE 80A	MCFRE 80A S	N/A	N/A	8 .31	N/A	2.0 .08	63 2.5	35.050 .3799	+0.025/-0 +0.0009/- 0	M30x1.5	441 3,903	2,200	1.64 3.62
	MCFRE 80A SB			-	14 .55								
	MCFRE 80A SX			8 .31	N/A								
	MCFRE 80A SBX			-	14 .55								

McGILL® Metric CAMROL Bearings

Basic Construction Type: Stud Type Crowned / Cylindrical Outside Diameter

Rolling Elements: Full Complement / Retained (Caged) Needle Roller

Bearing Material: Bearing Quality Steel

Seal Type: LUBRI-DISC®

Lubrication: Lithium Soap Grease NLGI #2

System Configuration: Concentric / Eccentric

Mounting Feature: Slot / Hex Hole

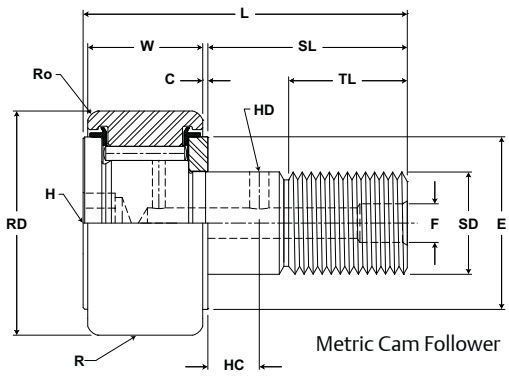

Metric Cam Follower

MCF, MCFE

Part No. W/O Seals	Part No. With LUBRI-DISC Seals	RD Roller Diameter mm Nom.	RD Roller Diameter mm Tol.	RD Roller Diameter inch Nom.	RD Roller Diameter inch Tol.	W Roller Width mm Nom.	W Roller Width mm Tol.	W Roller Width inch Nom.	W Roller Width inch Tol.	SD Stud Diameter mm Nom.	SD Stud Diameter mm Tol.	SD Stud Diameter inch Nom.	SD Stud Diameter inch Tol.	SL Stud Length mm (Ref)	SL Stud Length inch (Ref)	C Endplate Extension mm (Ref)	C Endplate Extension inch (Ref)	TL Minimum Thread Length mm (Ref)	TL Minimum Thread Length inch (Ref)	L Length Overall mm (Ref)	L Length Overall inch (Ref)	R Cylindrical Suffix MCF-xx-X mm Radius	R Cylindrical Suffix MCF-xx-X inch Radius	ECC Eccentric Base Modifier MCFE-xx mm (Ref)	ECC Eccentric Base Modifier MCFE-xx inch (Ref)	G Eccentric Base Modifier MCFE-xx mm +05/-.15	G Eccentric Base Modifier MCFE-xx inch +.002/-.006	BD Eccentric Base Modifier MCFE-xx mm (Ref)	BD Eccentric Base Modifier MCFE-xx inch (Ref)	Track Roller Dynamic Rating N/lb	Track Roller Static Rating N/lb
MCF 80	MCF 80 S	85.000	+0/-.050	3.3465	+0/-.002	35.000	+0/-.12	1.3780	+0/-.005	30.000	+0/-.021	1.1811	+0/-.0008	63	2.5	1.00	.039	32.0	1.26	100	3.9	500	19.7	N/A	N/A	N/A	N/A	N/A	N/A	64,140	102,300
MCF 80 B	MCF 80 SB																					Cylindrical								14,420	22,999
MCF 80 X	MCF 80 SX		+0/-.015		+0/-.002																										
MCF 80 BX	MCF 80 SBX				+0/-.0006																										
MCFE 80	MCFE 80 S	85.000	+0/-.050	3.3465	+0/-.002	35.000	+0/-.12	1.3780	+0/-.005	30.000	+0/-.021	1.1811	+0/-.0008	63	2.5	1.00	.039	32.0	1.26	100	3.9	500	19.7	1.5	.06	29	1.14	35	.38	64,140	102,300
	MCFE 80 SB																					Cylindrical								14,420	22,999
	MCFE 80 SX		+0/-.015		+0/-.002																										
	MCFE 80 SBX				+0/-.0006																										
MCFR 85	MCFR 85 S	85.000	+0/-.050	3.3465	+0/-.002	35.000	+0/-.12	1.3780	+0/-.005	30.000	+0/-.021	1.1811	+0/-.0008	63	2.5	1.00	.039	32.0	1.26	100	3.9	500	19.7	N/A	N/A	N/A	N/A	N/A	N/A	46,680	87,600
MCFR 85 B	MCFR 85 SB																					Cylindrical								10,495	19,694
MCFR 85 X	MCFR 85 SX		+0/-.015		+0/-.002																										
MCFR 85 BX	MCFR 85 SBX				+0/-.0006																										
MCFRE 85	MCFRE 85 S	85.000	+0/-.050	3.3465	+0/-.002	35.000	+0/-.12	1.3780	+0/-.005	30.000	+0/-.021	1.1811	+0/-.0008	63	2.5	1.00	.039	32.0	1.26	100	3.9	500	19.7	1.5	.06	29	1.14	35	.38	46,680	87,600
MCFRE 85 B	MCFRE 85 SB																					Cylindrical								10,495	19,694
MCFRE 85 X	MCFRE 85 SX		+0/-.015		+0/-.002																										
MCFRE 85 BX	MCFRE 85 SBX				+0/-.0006																										
MCF 90	MCF 90 S	90.000	+0/-.050	3.5433	+0/-.002	35.000	+0/-.12	1.3780	+0/-.005	30.000	+0/-.021	1.1811	+0/-.0008	63	2.5	1.00	.039	32.0	1.26	100	3.9	500	19.7	N/A	N/A	N/A	N/A	N/A	N/A	64,140	102,300
MCF 90 B	MCF 90 SB																					Cylindrical								14,420	22,999
MCF 90 X	MCF 90 SX		+0/-.015		+0/-.002																										
MCF 90 BX	MCF 90 SBX				+0/-.0006																										
MCFE 90	MCFE 90 S	90.000	+0/-.050	3.5433	+0/-.002	35.000	+0/-.12	1.3780	+0/-.005	30.000	+0/-.021	1.1811	+0/-.0008	63	2.5	1.00	.039	32.0	1.26	100	3.9	500	19.7	1.5	.06	29	1.14	35	.38	64,140	102,300
	MCFE 90 SB																					Cylindrical								14,420	22,999
	MCFE 90 SX		+0/-.015		+0/-.002																										
	MCFE 90 SBX				+0/-.0006																										
MCFR 90	MCFR 90 S	90.000	+0/-.050	3.5433	+0/-.002	35.000	+0/-.12	1.3780	+0/-.005	30.000	+0/-.021	1.1811	+0/-.0008	63	2.5	1.00	.039	32.0	1.26	100	3.9	500	19.7	N/A	N/A	N/A	N/A	N/A	N/A	46,680	87,600
MCFR 90 B	MCFR 90 SB																					Cylindrical								10,495	19,694
MCFR 90 X	MCFR 90 SX		+0/-.015		+0/-.002																										
MCFR 90 BX	MCFR 90 SBX				+0/-.0006																										
MCFRE 90	MCFRE 90 S	90.000	+0/-.050	3.5433	+0/-.002	35.000	+0/-.12	1.3780	+0/-.005	30.000	+0/-.021	1.1811	+0/-.0008	63	2.5	1.00	.039	32.0	1.26	100	3.9	500	19.7	1.5	.06	29	1.14	35	.38	46,680	87,600
	MCFRE 90 SB																					Cylindrical								10,495	19,694
	MCFRE 90 SX		+0/-.015		+0/-.002																										
	MCFRE 90 SBX				+0/-.0006																										

1. Standard bearing has a crowned roller outside diameter. For straight cylindrical outside roller diameter, add suffix "X". Example - MCFR-35-X or MCF-35-SX.
2. Clamping torque is based on dry threads. If threads are lubricated, use half of value shown.
3. Static load rating is based on stud strength or on internal rolling element load distribution stresses.
4. Dynamic load should not exceed 50% of Dynamic Rating as a track roller.
5. Since load, lubrication method, temperature and other factors affect the maximum operating speed, it is impossible to determine precise limiting speed. The listed limiting speeds are based on lightly loaded bearings having adequate lubrication and are listed only as a design guide. More frequent relubrication is required when operating at higher speeds. Actual bearing testing in the specific application should be conducted if the anticipated operating speed approaches the listed limiting speed.

Inch dimensions for reference only.
Not all parts are available from stock. Please contact customer service for availability (800) 626-2120.
For more information on bearing capabilities outside of our standard offering, please contact Application Engineering (800) 626-2093.

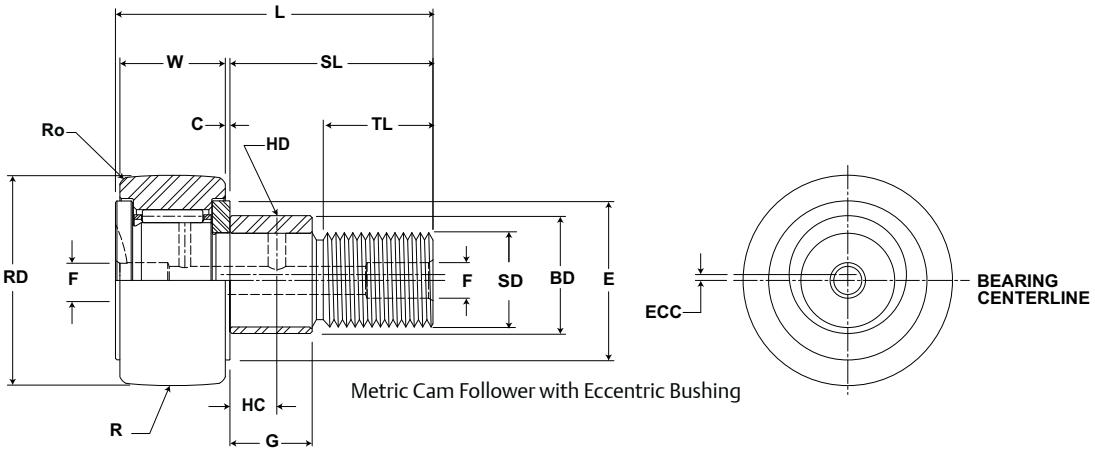

Metric Cam Follower with Eccentric Bushing

MCF, MCFE

Part No.		HC	HD	F	H	Ro	E	Housing Bore Diameter		Thread Type	Clamping Torque	Limiting Speed (Grease)	WT
W/O Seals	With LUBRI-DISC Seals	Hole Center	Radial Lub. Hole Diameter	Lub. Hole Dia	Hex Hole Suffix MCF_xx B	Outer Corner	Min. Clamping Diameter						Bearing Weight
		mm inch		mm inch		mm inch		mm inch			Nm in-lb	RPM	kg lb
		(Ref)	(Ref)	(Ref)	(Ref)	(Ref)	(Ref)	Nom.	Tol.				
MCF 80	MCF 80 S	15 .591	4 .157	8 .31	N/A	2.0 .08	63 2.5	30.000 .1811	+.021/-0 +.0008/- 0	M30x1.5	441 3,903	1,500	1.64 3.62
MCF 80 B	MCF 80 SB			-	14 .55								
MCF 80 X	MCF 80 SX			8 .31	N/A								
MCF 80 BX	MCF 80 SBX			-	14 .55								
MCFE 80	MCFE 80 S	15 .591	4 .157	8 .31	N/A	2.0 .08	63 2.5	35.050 .3799	+0.025/-0 +0.0009/- 0	M30x1.5	441 3,903	1,500	1.64 3.62
	MCFE 80 SB			-	14 .55								
	MCFE 80 SX			8 .31	N/A								
	MCFE 80 SBX			-	14 .55								
MCFR 85	MCFR 85 S	15 .591	4 .157	8 .31	N/A	2.0 .08	63 2.5	30.000 .1811	+.021/-0 +.0008/- 0	M30x1.5	441 3,903	2,200	1.81 3.99
MCFR 85 B	MCFR 85 SB			-	14 .55								
MCFR 85 X	MCFR 85 SX			8 .31	N/A								
MCFR 85 BX	MCFR 85 SBX			-	14 .55								
MCFRE 85	MCFRE 85 S	N/A	N/A	8 .31	N/A	2.0 .08	63 2.5	35.050 .3799	+0.025/-0 +0.0009/- 0	M30x1.5	441 3,903	2,200	1.81 3.99
MCFRE 85 B	MCFRE 85 SB			-	14 .55								
MCFRE 85 X	MCFRE 85 SX			8 .31	N/A								
MCFRE 85 BX	MCFRE 85 SBX			-	14 .55								
MCF 90	MCF 90 S	15 .591	4 .157	8 .31	N/A	2.0 .08	68 2.7	30.000 .1811	+.021/-0 +.0008/- 0	M30x1.5	441 3,903	1,500	1.99 4.39
MCF 90 B	MCF 90 SB			-	14 .55								
MCF 90 X	MCF 90 SX			8 .31	N/A								
MCF 90 BX	MCF 90 SBX			-	14 .55								
MCFE 90	MCFE 90 S	15 .591	4 .157	8 .31	N/A	2.0 .08	68 2.7	35.050 .3799	+0.025/-0 +0.0009/- 0	M30x1.5	441 3,903	1,500	1.99 4.39
	MCFE 90 SB			-	14 .55								
	MCFE 90 SX			8 .31	N/A								
	MCFE 90 SBX			-	14 .55								
MCFR 90	MCFR 90 S	15 .591	4 .157	8 .31	N/A	2.0 .08	68 2.7	30.000 .1811	+.021/-0 +.0008/- 0	M30x1.5	441 3,903	2,200	1.99 4.39
MCFR 90 B	MCFR 90 SB			-	14 .55								
MCFR 90 X	MCFR 90 SX			8 .31	N/A								
MCFR 90 BX	MCFR 90 SBX			-	14 .55								
MCFRE 90	MCFRE 90 S	N/A	N/A	8 .31	N/A	2.0 .08	68 2.7	35.050 .3799	+0.025/-0 +0.0009/- 0	M30x1.5	441 3,903	2,200	1.99 4.39
	MCFRE 90 SB			-	14 .55								
	MCFRE 90 SX			8 .31	N/A								
	MCFRE 90 SBX			-	14 .55								

McGILL® Metric CAMROL Bearings

Basic Construction Type: Yoke Type Crowned / Cylindrical Outside Diameter

Rolling Elements: Full Complement / Retained (Caged) Needle Roller

Bearing Material: Bearing Quality Steel

Seal Type: LUBRI-DISC®

Lubrication: Lithium Soap Grease NLGI #2

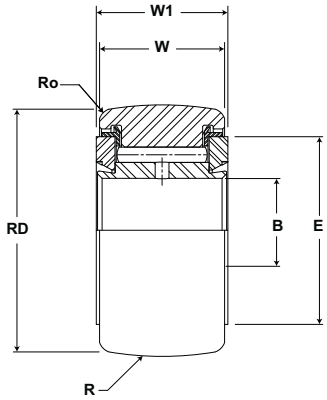

Metric Cam Yoke Roller with Crowned O.D.

MCYR

Part No.		RD		W		B		W1		R	Track Roller Dynamic Rating	Track Roller Static Rating
W/O Seals	With LUBRI-DISC Seals	Roller Diameter		Roller Width		Bore		Overall Width		Cylindrical Suffix MCYR-X		
		mm inch		mm inch		mm inch		mm inch		mm inch	N/lb	N/lb
		Nom.	Tol.	Nom.	Tol.	Nom	Tol	(Ref)	(Ref)	Radius (Ref)		
MCYR 5	MCYR 5 S	16.000 .6299	0/-0.05 +0/-0.0002	11.00 .433	+0/-.12 +0/-.005	5.000 .1969	+0/-.008 +0/-.0003	12.000 .4724	+0/-.18 +0/-.007	500 20	5,790 1,302	6,900 1,551
MCYR 5 X	MCYR 5 SX		+0/-.008 +0/-.0003							Cylindrical		
MCYRR 5	MCYRR 5 S		0/-0.05 +0/-0.0002							500 20	3,430 771	3,380 760
MCYRR 5 X	MCYRR 5 SX		+0/-.008 +0/-.0003							Cylindrical		
MCYR 6	MCYR 6 S	19.000 .7480	0/-0.05 +0/-0.0002	11.00 .433	+0/-.12 +0/-.009	6.000 .2362	+0/-.008 +0/-.0003	12.000 .4724	+0/-.18 +0/-.007	500 20	6,670 1,500	8,760 1,969
MCYR 6 X	MCYR 6 SX		+0/-.009 +0/-.0004							Cylindrical		
MCYRR 6	MCYRR 6 S		0/-0.05 +0/-0.0002							500 20	3,730 839	4,090 920
MCYRR 6 X	MCYRR 6 SX		+0/-.009 +0/-.0004							Cylindrical		
MCYR 8	MCYR 8 S	24.000 0.9449	0/-0.05 +0/-0.0002	14.00 .551	+0/-.12 +0/-.013	8.000 .3150	+0/-.008 +0/-.0003	15.000 .5906	+0/-.18 +0/-.007	500 20	9,610 2,161	12,600 2,833
MCYR 8 X	MCYR 8 SX		+0/-.009 +0/-.0004							Cylindrical		
MCYRR 8	MCYRR 8 S		0/-0.05 +0/-0.0002							500 20	5,690 1,279	6,450 1,450
MCYRR 8 X	MCYRR 8 SX		+0/-.009 +0/-.0004							Cylindrical		
MCYR 10	MCYR 10 S	30.000 1.1811	0/-0.05 +0/-0.0002	14.00 .551	+0/-.12 +0/-.017	10.000 .3937	+0/-.008 +0/-.0003	15.000 .5906	+0/-.18 +0/-.007	500 20	11,080 2,491	15,300 3,440
MCYR 10 X	MCYR 10 SX		+0/-.009 +0/-.0004							Cylindrical		
MCYRR 10	MCYRR 10 S		0/-0.05 +0/-0.0002							500 20	6,860 1,542	8,050 1,810
MCYRR 10 X	MCYRR 10 SX		+0/-.009 +0/-.0004							Cylindrical		
MCYR 12	MCYR 12 S	32.000 1.2598	0/-0.05 +0/-0.0002	14.00 .551	+0/-.12 +0/-.021	12.000 .4724	+0/-.008 +0/-.0003	15.000 .5906	+0/-.18 +0/-.007	500 20	12,060 2,711	17,400 3,912
MCYR 12 X	MCYR 12 SX		+0/-.011 +0/-.0004							Cylindrical		
MCYRR 12	MCYRR 12 S		0/-0.05 +0/-0.0002							500 20	1,260 283	9,120 2,050
MCYRR 12 X	MCYRR 12 SX		+0/-.011 +0/-.0004							Cylindrical		
MCYR 15	MCYR 15 S	35.000 1.3780	0/-0.05 +0/-0.0002	18.00 .709	+0/-.12 +0/-.025	15.000 .5906	+0/-.008 +0/-.0003	19.000 .7480	+0/-.21 +0/-.008	500 20	16,970 3,815	28,500 6,407
MCYR 15 X	MCYR 15 SX		+0/-.011 +0/-.0004							Cylindrical		
MCYRR 15	MCYRR 15 S		0/-0.05 +0/-0.0002							500 20	10,890 2,448	15,900 3,575
MCYRR 15 X	MCYRR 15 SX		+0/-.011 +0/-.0004							Cylindrical		
MCYR 17	MCYR 17 S	40.000 1.5748	0/-0.05 +0/-0.0002	20.00 .787	+0/-.12 +0/-.029	17.000 .6693	+0/-.008 +0/-.0003	21.000 .8268	+0/-.21 +0/-.008	500 20	19,420 4,366	32,200 7,239
MCYR 17 X	MCYR 17 SX		+0/-.011 +0/-.0004							Cylindrical		
MCYRR 17	MCYRR 17 S		0/-0.05 +0/-0.0002							500 20	13,340 2,999	19,700 4,429
MCYRR 17 X	MCYRR 17 SX		+0/-.011 +0/-.0004							Cylindrical		

1. Standard bearing has a crowned roller outside diameter. For straight cylindrical outside roller diameter, add suffix "X". Example - MCFR-35-X or MCF-35-SX.
2. Clamping torque is based on dry threads. If threads are lubricated, use half of value shown.
3. Static load rating is based on stud strength or on internal rolling element load distribution stresses.

Inch dimensions for reference only.
Not all parts are available from stock. Please contact customer service for availability (800) 626-2120.
For more information on bearing capabilities outside of our standard offering, please contact Application Engineering (800) 626-2093.

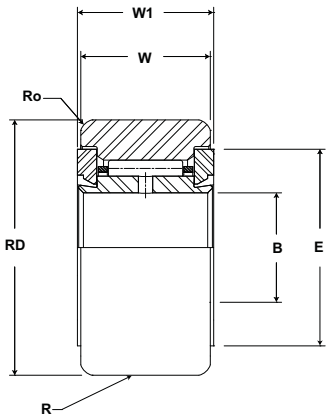

Metric Cam Yoke Roller
with Cylindrical O.D.

MCYR

Part No.		E	Ro	LF	LFT	TF	TFT	Limiting Speed	WT
W/O Seals	With LUBRI-DISC Seals	Min. Clamping Diameter	Outer Corner	Recommended Shaft Diameters					Bearing Weight
				Loose Fit (for light loads) g6		Light Fit (for medium loads) h6			
		mm inch		mm inch		mm inch		RPM	kg lb
		(Ref)	(Ref)	Nom.	Tol.	Nom.	Tol.		
MCYR 5	MCYR 5 S	11 .4	.30 .012	4.996 .1967	+0/-.008 +0/-.0003	5.000 .1968	+0/-.0 +0/-.00	13,000	.01 .02
MCYR 5 X	MCYR 5 SX								
MCYRR 5	MCYRR 5 S							19,500	
MCYRR 5 X	MCYRR 5 SX								
MCYR 6	MCYR 6 S	13 .5	.30 .012	5.996 .2361	+0/-.008 +0/-.0003	6.000 .2362	+0/-.0 +0/-.00	10,500	.02 .04
MCYR 6 X	MCYR 6 SX								
MCYRR 6	MCYRR 6 S							15,500	
MCYRR 6 X	MCYRR 6 SX								
MCYR 8	MCYR 8 S	16 .6	.50 .020	7.995 .3148	+0/-.009 +0/-.0004	8.000 .3149	+0/-.0 +0/-.00	8,400	.04 .09
MCYR 8 X	MCYR 8 SX								
MCYRR 8	MCYRR 8 S							12,500	
MCYRR 8 X	MCYRR 8 SX								
MCYR 10	MCYR 10 S	19 .7	1.00 .039	9.995 .3935	+0/-.009 +0/-.0004	10.000 .3937	+0/-.0 +0/-.00	6,400	.06 .13
MCYR 10 X	MCYR 10 SX								
MCYRR 10	MCYRR 10 S							9,600	
MCYRR 10 X	MCYRR 10 SX								
MCYR 12	MCYR 12 S	21 .8	1.00 .039	11.994 .4722	+0/-.011 +0/-.0004	12.000 .4724	+0/-.0 +0/-.00	6,400	.07 .15
MCYR 12 X	MCYR 12 SX								
MCYRR 12	MCYRR 12 S							9,600	
MCYRR 12 X	MCYRR 12 SX								
MCYR 15	MCYR 15 S	24 0.9	1.00 .039	14.994 .5903	+0/-.011 +0/-.0004	15.000 .5905	+0/-.0 +0/-.00	4,200	.10 .22
MCYR 15 X	MCYR 15 SX								
MCYRR 15	MCYRR 15 S							6,300	
MCYRR 15 X	MCYRR 15 SX								
MCYR 17	MCYR 17 S	27 1.1	1.50 .059	16.994 .6691	+0/-.011 +0/-.0004	17.000 .6692	+0/-.0 +0/-.00	3,300	.15 .33
MCYR 17 X	MCYR 17 SX								
MCYRR 17	MCYRR 17 S							5,000	
MCYRR 17 X	MCYRR 17 SX								

For a tight fit and heavy loads, us ISO tolerance J6.

McGILL® Metric CAMROL Bearings

Basic Construction Type: Yoke Type Crowned / Cylindrical Outside Diameter

Rolling Elements: Full Complement / Retained (Caged) Needle Roller

Bearing Material: Bearing Quality Steel

Seal Type: LUBRI-DISC®

Lubrication: Lithium Soap Grease NLGI #2

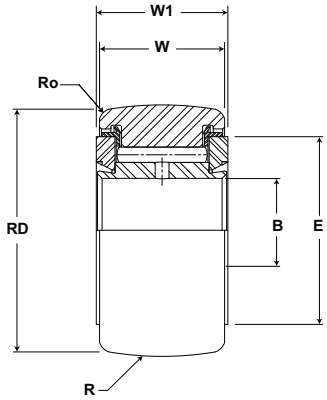

Metric Cam Yoke Roller with Crowned O.D.

MCYR

Part No.		RD		W		B		W1		R	Track Roller Dynamic Rating	Track Roller Static Rating
W/O Seals	With LUBRI-DISC Seals	Roller Diameter		Roller Width		Bore		Overall Width		Cylindrical Suffix MCYR-X		
		mm inch		mm inch		mm inch		mm inch		mm inch	N/lb	N/lb
		Nom.	Tol.	Nom.	Tol.	Nom	Tol	(Ref)	(Ref)	Radius (Ref)		
MCYR 20	MCYR 20 S	47.000 1.8504	0/-0.05 +0/-0.0002	24.00 .945	+0/-.12 +0/-.033	20.000 .7874	+0/-.010 +0/-.0004	25.000 .9843	+0/-.21 +0/-.008	500 20	25,690 5,776	48,000 10,791
MCYR 20 X	MCYR 20 SX		+0/-.011 +0/-.0004							Cylindrical		
MCYRR 20	MCYRR 20 S		0/-0.05 +0/-0.0002							500 20	17,750 3,991	29,800 6,700
MCYRR 20 X	MCYRR 20 SX		+0/-.011 +0/-.0004							Cylindrical		
MCYR 25	MCYR 25 S	52.000 2.0472	0/-0.05 +0/-0.0002	24.00 .945	+0/-.12 +0/-.037	25.000 .9843	+0/-.010 +0/-.0004	25.000 .9843	+0/-.21 +0/-.008	500 20	28,440 6,394	58,700 13,197
MCYR 25 X	MCYR 25 SX		+0/-.013 +0/-.0005							Cylindrical		
MCYRR 25	MCYRR 25 S		0/-0.05 +0/-0.0002							500 20	19,120 4,299	34,900 7,846
MCYRR 25 X	MCYRR 25 SX		+0/-.013 +0/-.0005							Cylindrical		
MCYR 30	MCYR 30 S	62.000 2.4409	0/-0.05 +0/-0.0002	29.00 1.142	+0/-.12 +0/-.041	30.000 1.1811	+0/-.010 +0/-.0004	29.000 1.1417	+0/-.21 +0/-.008	500 20	41,480 9,326	89,000 20,009
MCYR 30 X	MCYR 30 SX		+0/-.013 +0/-.0005							Cylindrical		
MCYRR 30	MCYRR 30 S		0/-0.05 +0/-0.0002							500 20	28,340 6,371	54,300 12,208
MCYRR 30 X	MCYRR 30 SX		+0/-.013 +0/-.0005							Cylindrical		
MCYR 35	MCYR 35 S	72.000 2.8346	0/-0.05 +0/-0.0002	29.00 1.142	+0/-.12 +0/-.045	35.000 1.3780	+0/-.012 +0/-.0005	29.000 1.1417	+0/-.21 +0/-.008	500 20	47,370 10,650	10,000 2,248
MCYR 35 X	MCYR 35 SX		+0/-.013 +0/-.0005							Cylindrical		
MCYRR 35	MCYRR 35 S		0/-0.05 +0/-0.0002							500 20	32,460 7,298	60,900 13,692
MCYRR 35 X	MCYRR 35 SX		+0/-.013 +0/-.0005							Cylindrical		
MCYR 40	MCYR 40 S	80.000 3.1496	0/-0.05 +0/-0.0002	35.00 1.378	+0/-.12 +0/-.049	40.000 1.5748	+0/-.012 +0/-.0005	32.000 1.2598	+0/-.25 +0/-.010	500 20	58,350 13,118	123,000 27,653
MCYR 40 X	MCYR 40 SX		+0/-.015 +0/-.0006							Cylindrical		
MCYRR 40	MCYRR 40 S		0/-0.05 +0/-0.0002							500 20	41,480 9,326	78,700 17,693
MCYRR 40 X	MCYRR 40 SX		+0/-.015 +0/-.0006							Cylindrical		
MCYR 45	MCYR 45 S	85.000 3.3465	0/-0.05 +0/-0.0002	35.00 1.378	+0/-.12 +0/-.053	45.000 1.7717	+0/-.012 +0/-.0005	32.000 1.2598	+0/-.25 +0/-.010	500 20	61,490 13,824	136,000 30,576
MCYR 45 X	MCYR 45 SX		+0/-.015 +0/-.0006							Cylindrical		
MCYRR 45	MCYRR 45 S		0/-0.05 +0/-0.0002							500 20	42,760 9,613	84,100 18,907
MCYRR 45 X	MCYRR 45 SX		+0/-.015 +0/-.0006							Cylindrical		
MCYR 50	MCYR 50 S	90.000 3.5433	0/-0.05 +0/-0.0002	35.00 1.378	+0/-.12 +0/-.057	50.000 1.9685	+0/-.012 +0/-.0005	32.000 1.2598	+0/-.25 +0/-.010	500 20	64,330 14,463	148,000 33,273
MCYR 50 X	MCYR 50 SX		+0/-.015 +0/-.0006							Cylindrical		
MCYRR 50	MCYRR 50 S		0/-0.05 +0/-0.0002							500 20	45,600 10,252	94,800 21,313
MCYRR 50 X	MCYRR 50 SX		+0/-.015 +0/-.0006							Cylindrical		

1. Standard bearing has a crowned roller outside diameter. For straight cylindrical outside roller diameter, add suffix "X". Example - MCFR-35-X or MCF-35-SX.
2. Clamping torque is based on dry threads. If threads are lubricated, use half of value shown.
3. Static load rating is based on stud strength or on internal rolling element load distribution stresses.

Inch dimensions for reference only.
Not all parts are available from stock. Please contact customer service for availability (800) 626-2120.
For more information on bearing capabilities outside of our standard offering, please contact Application Engineering (800) 626-2093.

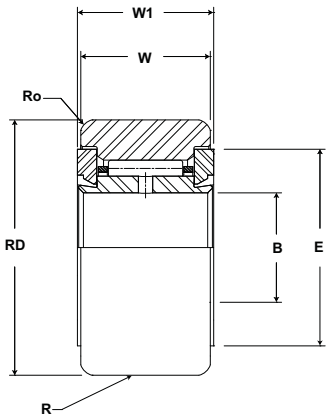

Metric Cam Yoke Roller
with Cylindrical O.D.

MCYR

Part No.		E	Ro	LF	LFT	TF	TFT	Limiting Speed	WT
W/O Seals	With LUBRI-DISC Seals	Min. Clamping Diameter	Outer Corner	Recommended Shaft Diameters					Bearing Weight
				Loose Fit (for light loads) g6		Light Fit (for medium loads) h6			
		mm inch		mm inch		mm inch		RPM	kg lb
		(Ref)	(Ref)	Nom.	Tol.	Nom.	Tol.		
MCYR 20	MCYR 20 S	30 1.2	1.50 .059	19.993 .7871	+0/-.013 +0/-.0005	20.000 .7874	+0/-.0 +0/-.00	2,600	.25 .55
MCYR 20 X	MCYR 20 SX								
MCYRR 20	MCYRR 20 S							3,900	
MCYRR 20 X	MCYRR 20 SX								
MCYR 25	MCYR 25 S	36 1.4	1.50 .059	24.993 .9840	+0/-.013 +0/-.0005	25.000 .9842	+0/-.0 +0/-.00	2,600	.29 .64
MCYR 25 X	MCYR 25 SX								
MCYRR 25	MCYRR 25 S							3,900	
MCYRR 25 X	MCYRR 25 SX								
MCYR 30	MCYR 30 S	44 1.7	2.00 .079	29.993 1.1808	+0/-.013 +0/-.0005	30.000 1.1811	+0/-.0 +0/-.00	2,100	.47 1.04
MCYR 30 X	MCYR 30 SX								
MCYRR 30	MCYRR 30 S							3,100	
MCYRR 30 X	MCYRR 30 SX								
MCYR 35	MCYR 35 S	52 2.0	2.00 .079	34.991 1.3776	+0/-.016 +0/-.0006	35.000 1.3779	+0/-.0 +0/-.00	2,100	.64 1.41
MCYR 35 X	MCYR 35 SX								
MCYRR 35	MCYRR 35 S							3,100	
MCYRR 35 X	MCYRR 35 SX								
MCYR 40	MCYR 40 S	58 2.3	2.00 .079	39.991 1.5744	+0/-.016 +0/-.0006	40.000 1.5748	+0/-.0 +0/-.00	1,500	.84 1.84
MCYR 40 X	MCYR 40 SX								
MCYRR 40	MCYRR 40 S							2,200	
MCYRR 40 X	MCYRR 40 SX								
MCYR 45	MCYR 45 S	63 2.5	2.00 .079	44.991 1.7713	+0/-.016 +0/-.0006	45.000 1.7716	+0/-.0 +0/-.00	1,500	.90 1.99
MCYR 45 X	MCYR 45 SX								
MCYRR 45	MCYRR 45 S							2,200	
MCYRR 45 X	MCYRR 45 SX								
MCYR 50	MCYR 50 S	68 2.7	2.00 .079	45.991 1.8107	+0/-.016 +0/-.0006	50.000 1.9685	+0/-.0 +0/-.00	1,500	.97 2.14
MCYR 50 X	MCYR 50 SX								
MCYRR 50	MCYRR 50 S							2,200	
MCYRR 50 X	MCYRR 50 SX								

For a tight fit and heavy loads, us ISO tolerance J6.

Heavy-Duty Inch and Metric CAMROL®

McGill Heavy-Duty CAMROL bearings are full complement cylindrical roller bearings featuring black oxide treated bearing steel, available in two basic mounting styles (stud or yoke) for use mechanical automation or linear motion applications. Our standard integral flange construction of stud version bearings helps maintain bearing integrity throughout the life. The inch series utilizes a rubber lip seal to provide a barrier for contamination and lubricant retention. Within the following section you can learn more about how these features and others can be applied to your application.

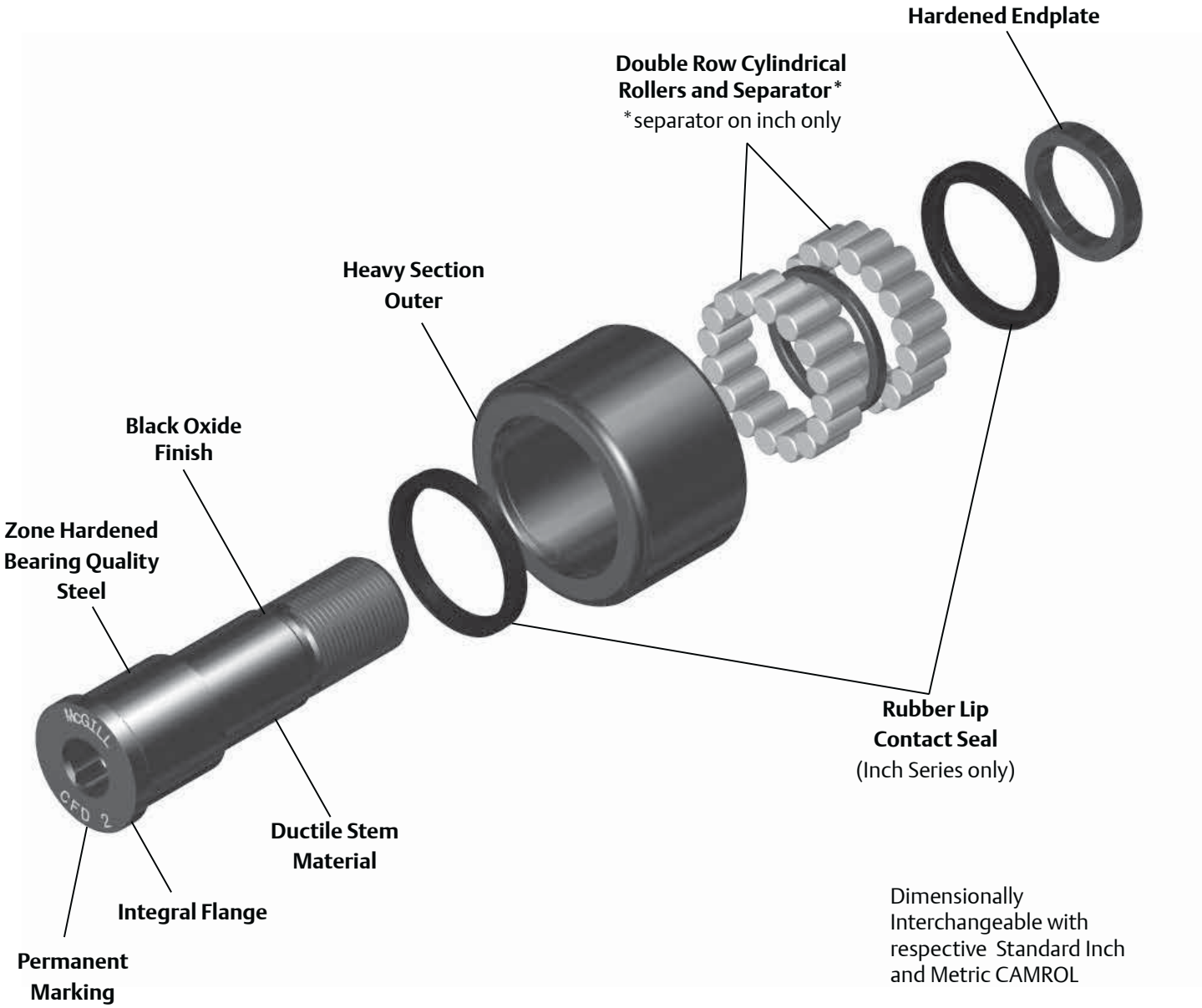

Dimensionally Interchangeable with respective Standard Inch and Metric CAMROL

Cam Follower Inch and Metric Nomenclature

Optional Prefix
- C - Crowned O.D. (Inch Series Only)
- M - Metric Series

Basic Type, Construction
- CFD - Heavy Duty Cam Follower
- CYRD - Heavy Duty Cam Yoke Roller

Construction Suffix
- E - Eccentric Bushing

Size
- Inch Series: O.D. In Inches
- Metric Stud Type: O.D. In mm
- Metric Yoke Type: Bore In mm

Optional Suffix
- B - Broached Hex Hole (Metric Series Only)
- X - Cylindrical Roller Profile (Metric Series Only)
- R - Oil Hole (Inch Series Only)

C CFD E - 1 1/2 - B

Features and Benefits

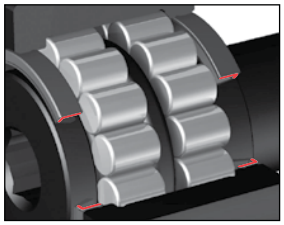

Double Row Full Complement Needle Rollers

The roller diameter to length ratio of Cylindrical rollers provides an end face and increases surface area to help support incidental thrust loads.

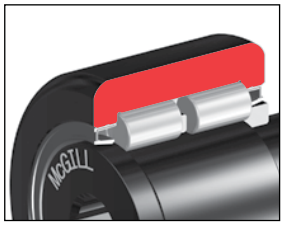

Heavy Section Outer

The heavy section outer helps support radial loading and provide proper rolling element support.

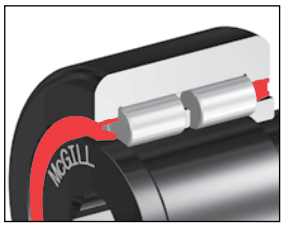

Rubber Lip Seals - Inch Series

Heavy-Duty CAMROL® Bearings have rubber lip seals to help keep contamination our and lubricant in. The seals are mounted inward to improve grease retention. Inch Only, removed as option- NS

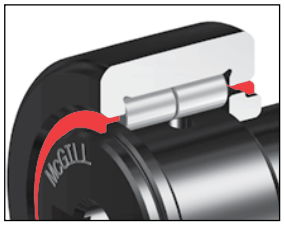

Metallic Shields - Metric Series

The metric series Heavy-Duty bearings metallic side shields providing a barriers to help retain grease and keep out containments. Metric Only, removed as option – NS

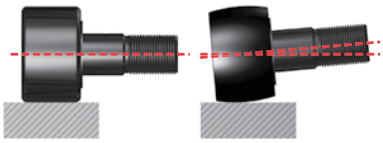

Crowned Outside Diameter (OD)

A crown on the OD of a cam follower bearing can increase bearing life versus a standard cylindrical cam follower. The crown achieves this performance by helping to distribute the stress on the outer ring and rolling elements resulting from misalignment due to mounting inaccuracy or stud deflection. The crown also helps reduce outer skidding in turntable or rotary applications. Not all applications may see the benefit of a crowned OD, consult Application Engineering for guidance for your application. Crowned OD is an option for Inch Series. Crowned OD is standard for Metric Series.

Features and Benefits continued

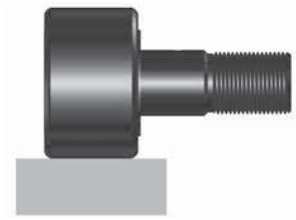

Cylindrical Outside Diameter (OD)

The cylindrical OD can improve performance in certain applications such as improved track capacity by maximizing the contact area with the track. Cylindrical OD is standard for Inch Series. Cylindrical OD is and option for Metric Series.

Zone Hardened Raceways

Heat treatment used to precisely harden working surfaces of the raceway and flange. The hardened surfaces provide support for the rolling element contact stresses, while keeping the core of the inner ductile to help absorb shock loads.

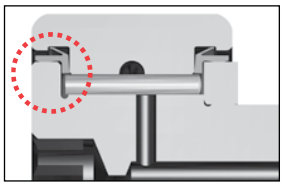

Integral Flange

The integral flange helps maintain bearing integrity throughout the bearing life. Zone hardened to provide wear resistance from incidental contact with the outer or rollers, and provides a sealing surface for rubber lipped seal.

Hex Hole (Broached)

The hex hole can aide in the installation and removal of stud type cam followers by increasing the holding power over a standard screw driver slot.
*Standard on inch, option on Metric.

Features and Benefits continued

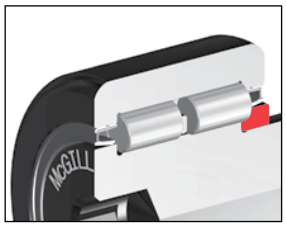

Hardened Endplate

Similar to the flange, the endplate must provide a contact surface for the seal and resist wear from incidental contact with the outer or rollers.

Factory Grease Fill

The cam follower and cam yoke roller bearings are factory lubricated with a medium temperature grease. Contact Application Engineering when application conditions require special lubricants.

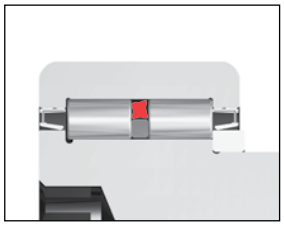

Lubrication Reservoir

The inch series heavy-Duty bearings incorporate a spacer, resulting in an increased lubricant reservoir. Inch only

Black Oxide Finish

Bearings have a black oxide finish on all external surfaces.

Options

Permanent Marking

Part number permanently marked on bearing face, helps bearing identification after years of service.

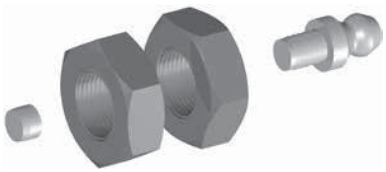

Installation Accessory Pack - Metric Series Stud Type

All McGill Metric Cam followers include (2) oil hole plug to help provide proper lubrication path to the rolling elements and prevent contamination from entering the bearing through a unused oil hole. Metric only, Inch as -OH option,

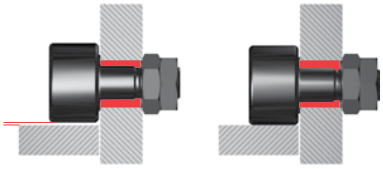

Eccentric Stud

Eccentric stud option provides a means of adjusting the radial position of the bearing, which can improve the load sharing of inline bearing combinations. Cam follower load sharing helps reduce operation costs by reducing premature failures due to overloaded bearings, the need of precise mounting hole location tolerances and providing ability to realign bearing due to track wear.

Additional Options

BHT
Broached (Hex) hole at threaded end of cam follower stud.

THT
Threaded axial lubrication hole at threaded end of cam follower stud.

THF
Threaded axial lubrication hole at flanged end of cam follower stud. Available with all screw driver slot cam followers or broached cam followers over 3”.

THB
Threaded axial oil hole on both ends of cam follower stud. Available with all screw driver slot cam followers or broached cam followers over 3”.

ALG
Annular lubrication groove at cam follower stem radial lubrication hole.

Custom Capabilities

- *Customer specified factory grease fill*
- *Grease fitting installed*
- *Stud or thread length modifications*
- *Roller diameter variations or tolerances*
- *Cam followers grouped or matched diameter tolerance / run out sets*
- *Custom engineered to order designs*

McGILL® Heavy Duty CAMROL Bearings

Basic Construction Type: Stud Type Crowned / Cylindrical Outside Diameter

Rolling Elements: Full Complement Cylindrical Roller

Bearing Material: Bearing Quality Steel

Seal Type: LUBRI-DISC

Lubrication: Lithium Soap Grease NLGI #2

System Configuration: Concentric / Eccentric / Heavy Stud

Mounting Feature: Slot / Hex Hole

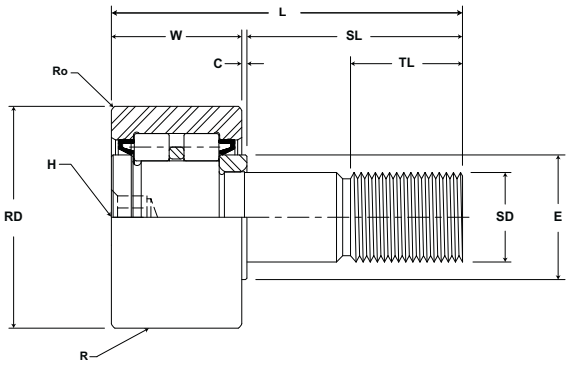

CFD

Part No.	RD		W		SD		SL	C	TL	L	R	Track Roller Dynamic Rating	Track Roller Static Rating
With Seals	Roller Diameter		Roller Width		Stud Diameter		Stud Length	Endplate Extension	Minimum Thread Length	Length Overall	Crown Prefix CCFD		
	inch mm		inch mm		inch mm		inch mm		inch mm		inch mm	lb/N	lb/N
	Nom.	Tol.	Nom.	Tol.	Nom.	Tol.	(Ref)	(Ref)	(Ref)	(Ref)	Radius		
CFD 1 1/4	1.250 31.75	+0/-.001 +0/-.03	.750 19.05	+0/-.001 +0/-.03	.500 12.70	+0/-.001 +0/-.03	1.25 31.8	.03 .8	.63 15.9	2.03 51.6	Cylindrical	3,300 14,680	2,400 10,680
CCFD 1 1/4											14 356		
CFD 1 3/8	1.375 34.93	+0/-.001 +0/-.03	.750 19.05	+0/-.001 +0/-.03	.500 12.70	+0/-.001 +0/-.03	1.25 31.8	.03 .8	.63 15.9	2.03 51.6	Cylindrical	3,600 16,000	2,400 10,680
CCFD 1 3/8											14 356		
CFD 1 1/2	1.500 38.10	+0/-.001 +0/-.03	.875 22.23	+0/-.001 +0/-.03	.625 15.88	+0/-.001 +0/-.03	1.50 38.1	.03 .8	.75 19.1	2.41 61.1	Cylindrical	5,000 22,240	4,100 18,240
CCFD 1 1/2											20 508		
CFD 1 5/8	1.625 41.28	+0/-.001 +0/-.03	.875 22.23	+0/-.001 +0/-.03	.625 15.88	+0/-.001 +0/-.03	1.50 38.1	.03 .8	.75 19.1	2.41 61.1	Cylindrical	5,400 24,020	4,100 18,240
CCFD 1 5/8											20 508		
CFD 1 3/4	1.750 44.45	+0/-.001 +0/-.03	1.000 25.40	+0/-.001 +0/-.03	.750 19.05	+0/-.001 +0/-.03	1.75 44.5	.03 .8	.88 22.2	2.78 70.6	Cylindrical	6,650 29,580	6,100 27,130
CCFD 1 3/4											20 508		
CFD 1 7/8	1.875 47.63	+0/-.001 +0/-.03	1.000 25.40	+0/-.001 +0/-.03	.750 19.05	+0/-.001 +0/-.03	1.75 44.5	.03 .8	.88 22.2	2.78 70.6	Cylindrical	7,100 31,580	6,100 27,130
CCFD 1 7/8											20 508		
CFD 2	2.000 50.80	+0/-.001 +0/-.03	1.250 31.75	+0/-.001 +0/-.03	.875 22.23	+0/-.001 +0/-.03	2.00 50.8	.03 .8	1.00 25.4	3.28 83.3	Cylindrical	9,500 42,260	8,300 36,920
CCFD 2											24 610		
CFD 2 1/4	2.250 57.15	+0/-.001 +0/-.03	1.250 31.75	+0/-.001 +0/-.03	.875 22.23	+0/-.001 +0/-.03	2.00 50.8	.03 .8	1.00 25.4	3.28 83.3	Cylindrical	10,500 46,700	8,300 36,920
CCFD 2 1/4											24 610		

Clamping torque is based on dry threads. If threads are lubricated, use half of value shown.

Metric dimensions for reference only.
Not all parts are available from stock. Please contact customer service for availability (800) 626-2120.
For more information on bearing capabilities outside of our standard offering, please contact Application Engineering (800) 626-2093.

CFD

Part No. With Seals	H Hex Hole Size (inch / mm)	E Min. Clamping Diameter (Ref) (inch / mm)	Ro Corner (Ref) (inch / mm)	Housing Bore Diameter Nom. (inch / mm)	Housing Bore Diameter Tol. (inch / mm)	Thread Type	Clamping Torque in-lb / Nm	WT Bearing Weight lb / kg
CFD 1 1/4	.25 6.4	.98 25.0	.03 .8	.5003 12.708	+.0002/-.0003 +.0005/-.0008	1/2-20	350 40	.29 .13
CCFD 1 1/4			N/A					
CFD 1 3/8	.25 6.4	.98 25.0	.05 1.2	.5003 12.708	+.0002/-.0003 +.0005/-.0012	1/2-20	350 40	.35 .16
CCFD 1 3/8			N/A					
CFD 1 1/2	.312 7.9	1.09 27.8	.06 1.6	.6253 15.883	+.0002/-.0003 +.0005/-.0016	5/8-18	650 73	.50 .22
CCFD 1 1/2			N/A					
CFD 1 5/8	.312 7.9	1.09 27.8	.06 1.6	.6253 15.883	+.0002/-.0003 +.0005/-.0020	5/8-18	650 73	.58 .26
CCFD 1 5/8			N/A					
CFD 1 3/4	.312 7.9	1.25 31.8	.06 1.6	.7503 19.058	+.0002/-.0003 +.0005/-.0024	3/4-16	1,250 141	.81 .37
CCFD 1 3/4			N/A					
CFD 1 7/8	.312 7.9	1.25 31.8	.06 1.6	.7503 19.058	+.0002/-.0003 +.0005/-.0028	3/4-16	1,250 141	.91 .41
CCFD 1 7/8			N/A					
CFD 2	.437 11.1	1.41 35.7	.09 2.4	.8753 22.233	+.0002/-.0003 +.0005/-.0032	7/8-14	1,500 170	1.29 .59
CCFD 2			N/A					
CFD 2 1/4	.437 11.1	1.41 35.7	.09 2.4	.8753 22.233	+.0002/-.0003 +.0005/-.0036	7/8-14	1,500 170	1.59 .72
CCFD 2 1/4			N/A					

Clamping torque is based on dry threads. If threads are lubricated, use half of value shown.

McGILL® Heavy Duty CAMROL Bearings

Basic Construction Type: Stud Type Crowned / Cylindrical Outside Diameter

Rolling Elements: Full Complement Cylindrical Roller

Bearing Material: Bearing Quality Steel

Seal Type: LUBRI-DISC®

Lubrication: Lithium Soap Grease NLGI #2

System Configuration: Concentric / Eccentric / Heavy Stud

Mounting Feature: Slot / Hex Hole

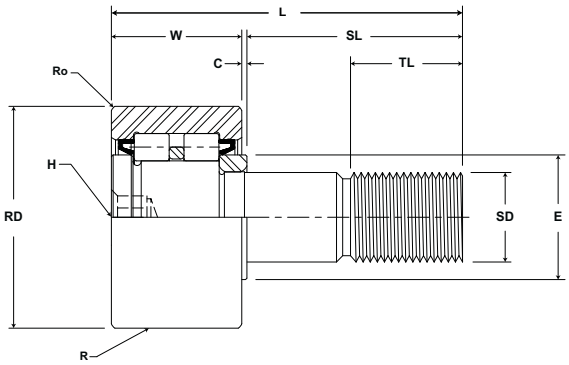

CFD

Part No.	RD		W		SD		SL	C	TL	L	R	Track Roller Dynamic Rating	Track Roller Static Rating
With Seals	Roller Diameter		Roller Width		Stud Diameter		Stud Length	Endplate Extension	Minimum Thread Length	Length Overall	Crown Prefix CCFD		
	inch mm		inch mm		inch mm		inch mm		inch mm		inch mm	lb/N	lb/N
	Nom.	Tol.	Nom.	Tol.	Nom.	Tol.	(Ref)	(Ref)	(Ref)	(Ref)	Radius		
CFD 2 1/2	2.500 63.50	+0/-.001 +0/-.03	1.500 38.10	+0/-.001 +0/-.03	1.000 25.40	+0/-.001 +0/-.03	2.25 57.2	.03 .8	1.125 28.6	3.78 96.0	Cylindrical	14,000 62,270	10,400 46,260
CCFD 2 1/2											30 762		
CFD 2 3/4	2.750 69.85	+0/-.001 +0/-.03	1.500 38.10	+0/-.001 +0/-.03	1.000 25.40	+0/-.001 +0/-.03	2.25 57.2	.03 .8	1.125 28.6	3.78 96.0	Cylindrical	15,000 66,720	10,400 46,260
CCFD 2 3/4											30 762		
CFD 3	3.000 76.20	+0/-.001 +0/-.03	1.750 44.45	+0/-.001 +0/-.03	1.250 31.75	+0/-.001 +0/-.03	2.50 63.5	.03 .8	1.25 31.7	4.28 108.7	Cylindrical	18,300 81,400	18,100 80,510
CCFD 3											30 762		
CFD 3 1/4	3.250 82.55	+0/-.001 +0/-.03	1.750 44.45	+0/-.001 +0/-.03	1.250 31.75	+0/-.001 +0/-.03	2.50 63.5	.03 .8	1.25 31.7	4.28 108.7	Cylindrical	20,300 90,290	18,100 80,510
CCFD 3 1/4											30 762		
CFD 3 1/2	3.500 88.90	+0/-.001 +0/-.03	2.000 50.80	+0/-.001 +0/-.03	1.375 34.93	+0/-.001 +0/-.03	2.75 69.9	.03 .8	1.375 34.9	4.78 121.4	Cylindrical	23,700 105,420	21,500 95,630
CCFD 3 1/2											30 762		
CFD 4	4.000 101.60	+0/-.001 +0/-.03	2.250 57.15	+0/-.001 +0/-.03	1.500 38.10	+0/-.001 +0/-.03	3.50 88.9	.03 .8	1.50 38.1	5.78 146.8	Cylindrical	32,500 144,560	22,800 101,410
CCFD 4											30 762		
CFD 5	5.000 127.00	+0/-.001 +0/-.03	2.750 69.85	+0/-.001 +0/-.03	2.000 50.80	+0/-.001 +0/-.03	5.06 128.6	.06 1.6	2.00 50.4	7.88 200.0	Cylindrical	50,500 224,620	50,800 225,960
CCFD 5											48 1,219		
CFD 6	6.000 152.40	+0/-.001 +0/-.03	3.250 82.55	+0/-.001 +0/-.03	2.500 63.50	+0/-.001 +0/-.03	6.00 152.4	.06 1.6	2.50 63.5	9.31 236.5	Cylindrical	71,500 318,030	86,100 382,970
CCFD 6											30 762		

Metric dimensions for reference only.
Not all parts are available from stock. Please contact customer service for availability (800) 626-2120.
For more information on bearing capabilities outside of our standard offering, please contact Application Engineering (800) 626-2093.

CFD

Part No. With Seals	H Hex Hole Size (inch / mm)	E Min. Clamping Diameter (Ref) (inch / mm)	Ro Corner (Ref) (inch / mm)	Housing Bore Diameter Nom. (inch / mm)	Housing Bore Diameter Tol. (inch / mm)	Thread Type	Clamping Torque in-lb / Nm	WT Bearing Weight lb / kg
CFD 2 1/2	.50 12.7	1.69 42.9	.09 2.4	1.0003 25.408	+.0002/-.0003 +.0005/-.0040	1-14	2,250 254	2.38 1.08
CCFD 2 1/2			N/A					
CFD 2 3/4	.50 12.7	1.69 42.9	.09 2.4	1.0003 25.408	+.0002/-.0003 +.0005/-.0044	1-14	2,250 254	2.93 1.33
CCFD 2 3/4			N/A					
CFD 3	.75 19.1	2.13 54.0	.13 3.2	1.2503 31.758	+.0002/-.0003 +.0005/-.0048	1 1/4-12	3,450 390	4.20 1.91
CCFD 3			N/A					
CFD 3 1/4	.75 19.1	2.13 54.0	.13 3.2	1.2503 31.758	+.0002/-.0003 +.0005/-.0052	1 1/4-12	3,450 390	4.52 2.05
CCFD 3 1/4			N/A					
CFD 3 1/2	.75 19.1	2.44 61.9	.13 3.2	1.3753 34.933	+.0002/-.0003 +.0005/-.0056	1 3/8-12	4,200 475	5.99 2.72
CCFD 3 1/2			N/A					
CFD 4	.75 19.1	2.80 71.0	.13 3.2	1.5003 38.108	+.0002/-.0003 +.0005/-.0060	1 1/2-12	5,000 565	8.97 4.07
CCFD 4			N/A					
CFD 5	.875 22.2	3.56 90.5	.13 3.2	2.0003 50.808	+.0002/-.0003 +.0005/-.0064	2-12	5,000 565	18.37 8.33
CCFD 5			N/A					
CFD 6	1.00 25.4	4.47 113.5	.13 3.2	2.5003 63.508	+.0002/-.0003 +.0005/-.0068	2 1/2-12	5,000 565	31.99 14.51
CCFD 6			N/A					

Clamping torque is based on dry threads. If threads are lubricated, use half of value shown.

McGILL® Heavy Duty CAMROL Bearings

Basic Construction Type: Yoke Type Crowned / Cylindrical Outside Diameter

Rolling Elements: Full Complement Cylindrical Roller

Bearing Material: Bearing Quality Steel

Seal Type: Rubber Lip Seal

Lubrication: Lithium Soap Grease NLGI #2

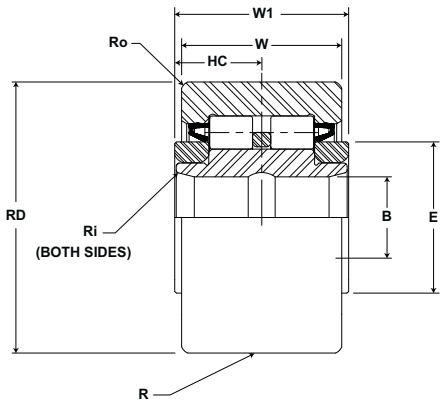

CYRD

Part No.	RD		W		B		W1		R	Track Roller Dynamic Rating	Track Roller Static Rating
With Seals	Roller Diameter		Roller Width		Bore Diameter		Overall Width		Crown Prefix CCYRD-XX		
	inch mm		inch mm		inch mm		inch mm			lb/N	lb/N
	Nom.	Tol.	Nom.	Tol.	Nom	Tol	Nom.	Tol.	Radius		
CYRD 1 1/4	1.250 31.75	+0/-.001 +0/-.03	.750 9.05	+0/-.001 +0/-.03	.375 9.53	+.0002/-.0004 +.0005/-.0010	.8125 20.6	+0.005/-0.01 +0.13/-0.25	Cylindrical	3,300 14,680	2,400 10,680
CCYRD 1 1/4									14 356		
CYRD 1 3/8	1.375 34.93	+0/-.001 +0/-.03	.750 9.05	+0/-.001 +0/-.05	.375 9.53	+.0002/-.0004 +.0005/-.0010	.8125 20.6	+0.005/-0.01 +0.13/-0.25	Cylindrical	3,600 16,000	2,400 10,680
CCYRD 1 3/8									14 356		
CYRD 1 1/2	1.500 38.10	+0/-.001 +0/-.03	.875 2.23	+0/-.001 +0/-.07	.438 1.11	+.0002/-.0004 +.0005/-.0010	.9375 23.8	+0.005/-0.01 +0.13/-0.25	Cylindrical	5,000 22,240	4,100 18,240
CCYRD 1 1/2									20 508		
CYRD 1 5/8	1.625 41.28	+0/-.001 +0/-.03	.875 2.23	+0/-.001 +0/-.09	.438 1.11	+.0002/-.0004 +.0005/-.0010	.9375 23.8	+0.005/-0.01 +0.13/-0.25	Cylindrical	5,400 24,020	4,100 18,240
CCYRD 1 5/8									20 508		
CYRD 1 3/4	1.750 44.45	+0/-.001 +0/-.03	1.000 25.40	+0/-.001 +0/-.11	.500 2.70	+.0002/-.0004 +.0005/-.0010	1.0625 27.0	+0.005/-0.01 +0.13/-0.25	Cylindrical	6,650 29,580	6,100 27,130
CCYRD 1 3/4									20 508		
CYRD 1 7/8	1.875 47.63	+0/-.001 +0/-.03	1.000 25.40	+0/-.001 +0/-.13	.500 2.70	+.0002/-.0004 +.0005/-.0010	1.0625 27.0	+0.005/-0.01 +0.13/-0.25	Cylindrical	7,100 31,580	6,100 27,130
CCYRD 1 7/8									20 508		
CYRD 2	2.000 50.80	+0/-.001 +0/-.03	1.250 31.75	+0/-.001 +0/-.15	.625 5.88	+.0002/-.0004 +.0005/-.0010	1.3125 33.3	+0.005/-0.01 +0.13/-0.25	Cylindrical	9,500 42,260	8,300 36,920
CCYRD 2									24 610		
CYRD 2 1/4	2.250 57.15	+0/-.001 +0/-.03	1.250 31.75	+0/-.001 +0/-.17	.625 5.88	+.0002/-.0004 +.0005/-.0010	1.3125 33.3	+0.005/-0.01 +0.13/-0.25	Cylindrical	10,500 46,700	8,300 36,920
CCYRD 2 1/4									24 610		

Metric dimensions for reference only.
Not all parts are available from stock. Please contact customer service for availability (800) 626-2120.
For more information on bearing capabilities outside of our standard offering, please contact Application Engineering (800) 626-2093.

CYRD

Part No.	HC	E	Ri	Ro	Recommended Shaft Diameters						WT
With Seals	Hole Center	Min. Clamping Diameter	Outer Corner Radius	Inner Corner Radius	Push Fit		Drive Fit		Press Fit		Bearing Weight
	inch mm		inch mm		inch mm		inch mm		inch mm		lb kg
	(Ref)	(Ref)	(Ref)	(Ref)	Nom	Tol	Nom	Tol	Nom	Tol	
CYRD 1 1/4	.31 7.9	.98 5.0	.03 0.8	.03 0.8	.3745 9.512	±.0002 ±.005	.3751 9.53	±.0002 ±.005	.3753 9.53	±.0002 ±.005	.21 .09
CCYRD 1 1/4											
CYRD 1 3/8	.31 7.9	.98 5.0	.03 0.8	.05 1.2	.3745 9.512	±.0002 ±.005	.3751 9.53	±.0002 ±.005	.3753 9.53	±.0002 ±.005	.26 .12
CCYRD 1 3/8											
CYRD 1 1/2	.38 9.5	1.09 27.8	.04 1.0	.06 1.6	.4370 1.100	±.0002 ±.005	.4376 11.12	±.0002 ±.005	.4378 11.12	±.0002 ±.005	.35 .16
CCYRD 1 1/2											
CYRD 1 5/8	.38 9.5	1.09 27.8	.04 1.0	.06 1.6	.4370 1.100	±.0002 ±.005	.4376 11.12	±.0002 ±.005	.4378 11.12	±.0002 ±.005	.43 .19
CCYRD 1 5/8											
CYRD 1 3/4	.44 1.1	1.25 31.8	.05 1.3	.06 1.6	.4995 2.687	±.0002 ±.005	.5001 12.70	±.0002 ±.005	.5005 12.71	±.0002 ±.005	.57 .26
CCYRD 1 3/4											
CYRD 1 7/8	.44 1.1	1.25 31.8	.05 1.3	.06 1.6	.4995 2.687	±.0002 ±.005	.5001 12.70	±.0002 ±.005	.5005 12.71	±.0002 ±.005	.66 .29
CCYRD 1 7/8											
CYRD 2	.50 2.7	1.41 35.7	.06 1.5	.09 2.4	.6245 5.862	±.0002 ±.005	.6251 15.88	±.0002 ±.005	.6255 15.89	±.0002 ±.005	.88 .39
CCYRD 2											
CYRD 2 1/4	.50 2.7	1.41 35.7	.06 1.5	.09 2.4	.6245 5.862	±.0002 ±.005	.6251 15.88	±.0002 ±.005	.6255 15.89	±.0002 ±.005	1.18 .54
CCYRD 2 1/4											

McGILL® Heavy Duty CAMROL Bearings

Basic Construction Type: Yoke Type Crowned / Cylindrical Outside Diameter

Rolling Elements: Full Complement Cylindrical Roller

Bearing Material: Bearing Quality Steel

Seal Type: Rubber Lip Seal

Lubrication: Lithium Soap Grease NLGI #2

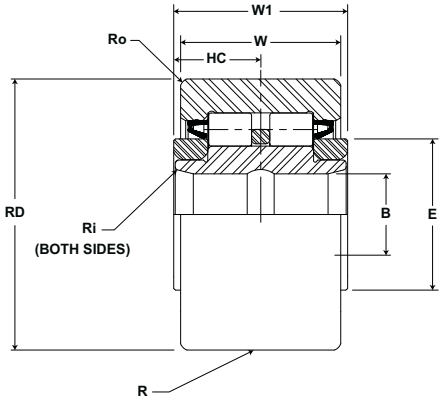

CYRD

Part No.	RD		W		B		W1		R	Track Roller Dynamic Rating	Track Roller Static Rating
With Seals	Roller Diameter		Roller Width		Bore Diameter		Overall Width		Crown Prefix CCYRD-XX		
	inch mm		inch mm		inch mm		inch mm			lb/N	lb/N
	Nom.	Tol.	Nom.	Tol.	Nom	Tol	Nom.	Tol.	Radius		
CYRD 2 1/2	2.500 63.50	+0/-.001 +0/-.03	1.500 38.10	+0/-.001 +0/-.19	.750 9.05	+.0002/-.0004 +.0005/-.0010	1.5625 39.7	+0.005/-0.01 +0.13/-0.25	Cylindrical	14,000 62,270	10,400 46,260
CCYRD 2 1/2									30 762		
CYRD 2 3/4	2.750 69.85	+0/-.001 +0/-.03	1.500 38.10	+0/-.001 +0/-.21	.750 9.05	+.0002/-.0004 +.0005/-.0010	1.5625 39.7	+0.005/-0.01 +0.13/-0.25	Cylindrical	15,000 66,720	10,400 46,260
CCYRD 2 3/4									30 762		
CYRD 3	3.000 76.20	+0/-.001 +0/-.03	1.750 44.45	+0/-.001 +0/-.23	1.000 25.40	+.0001/-.0005 +.0003/-.0013	1.8125 46.0	+0.005/-0.01 +0.13/-0.25	Cylindrical	18,300 81,400	18,100 80,510
CCYRD 3									30 762		
CYRD 3 1/4	3.250 82.55	+0/-.001 +0/-.03	1.750 44.45	+0/-.001 +0/-.25	1.000 25.40	+.0001/-.0005 +.0003/-.0013	1.8125 46.0	+0.005/-0.01 +0.13/-0.25	Cylindrical	20,300 90,290	18,100 80,510
CCYRD 3 1/4									30 762		
CYRD 3 1/2	3.500 88.90	+0/-.001 +0/-.03	2.000 50.80	+0/-.001 +0/-.27	1.125 28.58	+.0001/-.0005 +.0003/-.0013	2.0625 52.4	+0.005/-0.01 +0.13/-0.25	Cylindrical	23,700 105,420	21,500 95,630
CCYRD 3 1/2									30 762		
CYRD 4	4.000 101.60	+0/-.001 +0/-.03	2.250 57.15	+0/-.001 +0/-.29	1.250 31.75	+.0001/-.0005 +.0003/-.0013	2.3125 58.7	+0.005/-0.01 +0.13/-0.25	Cylindrical	32,500 144,560	22,800 101,410
CCYRD 4									30 762		
CYRD 5	5.000 127.00	+0/-.001 +0/-.03	2.750 69.85	+0/-.001 +0/-.31	1.750 44.45	+.0001/-.0005 +.0003/-.0013	2.875 73.0	+0.005/-0.01 +0.13/-0.25	Cylindrical	50,500 224,620	50,800 225,960
CCYRD 5									48 1,219		
CYRD 6	6.000 152.40	+0/-.001 +0/-.03	3.250 82.55	+0/-.001 +0/-.33	2.250 57.15	+.0001/-.0005 +.0003/-.0013	3.375 85.7	+0.005/-0.01 +0.13/-0.25	Cylindrical	71,500 318,030	86,100 382,970
CCYRD 6									56 1,422		

Metric dimensions for reference only.
Not all parts are available from stock. Please contact customer service for availability (800) 626-2120.
For more information on bearing capabilities outside of our standard offering, please contact Application Engineering (800) 626-2093.

CYRD

Part No. With Seals	HC Hole Center inch mm (Ref)	E Min. Clamping Diameter inch mm (Ref)	Ri Outer Corner Radius inch mm (Ref)	Ro Inner Corner Radius inch mm (Ref)	Recommended Shaft Diameters: Push Fit inch mm Nom	Push Fit Tol	Drive Fit inch mm Nom	Drive Fit Tol	Press Fit inch mm Nom	Press Fit Tol	WT Bearing Weight lb kg
CYRD 2 1/2	.56 4.3	1.69 42.9	.07 1.8	.09 2.4	.7495 9.037	±.0002 ±.005	.7501 19.05	±.0002 ±.005	.7505 19.06	±.0002 ±.005	1.74 .79
CCYRD 2 1/2											
CYRD 2 3/4	.56 4.3	1.69 42.9	.07 1.8	.09 2.4	.7495 9.037	±.0002 ±.005	.7501 19.05	±.0002 ±.005	.7505 19.06	±.0002 ±.005	2.17 .98
CCYRD 2 3/4											
CYRD 3	.63 5.9	2.13 54.0	.08 2.0	.13 3.2	.9994 5.385	±.0002 ±.005	1.002 25.5	±.0002 ±.005	1.006 25.55	±.0002 ±.005	3.08 1.39
CCYRD 3											
CYRD 3 1/4	.63 5.9	2.13 54.0	.08 2.0	.13 3.2	.9994 5.385	±.0002 ±.005	1.002 25.5	±.0002 ±.005	1.006 25.55	±.0002 ±.005	3.62 1.64
CCYRD 3 1/4											
CYRD 3 1/2	.69 7.5	2.44 61.9	.09 2.3	.13 3.2	1.1244 28.560	±.0002 ±.005	1.1252 28.58	±.0002 ±.005	1.1256 28.59	±.0002 ±.005	4.41 2.00
CCYRD 3 1/2											
CYRD 4	.75 9.1	2.80 71.0	.10 2.5	.13 3.2	1.2494 31.735	±.0002 ±.005	1.2502 31.76	±.0002 ±.005	1.2506 31.77	±.0002 ±.005	6.57 2.98
CCYRD 4											
CYRD 5	.88 2.2	3.56 90.5	.11 2.8	.13 3.2	1.7494 44.435	±.0002 ±.005	1.7502 44.46	±.0002 ±.005	1.7506 44.47	±.0002 ±.005	12.33 5.59
CCYRD 5											
CYRD 6	1.00 25.4	4.47 113.5	.12 3.0	.13 3.2	2.2494 57.135	±.0002 ±.005	2.2502 57.16	±.0002 ±.005	2.2506 57.17	±.0002 ±.005	20.47 9.29
CCYRD 6											

McGILL® Heavy Duty CAMROL Bearings

Basic Construction Type: Stud Type Crowned / Cylindrical Outside Diameter

Rolling Elements: Full Complement Cylindrical Roller

Bearing Material: Bearing Quality Steel

Seal Type: Metallic Shield

Lubrication: Lithium Soap Grease NLGI #2

System Configuration: Concentric / Eccentric

Mounting Feature: Slot / Hex Hole

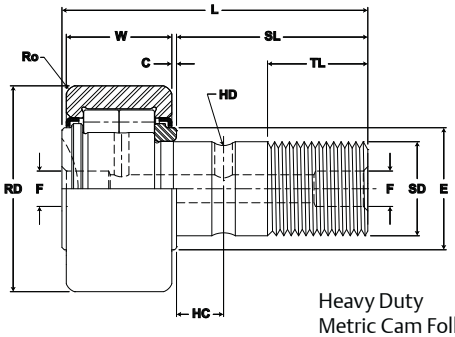

Heavy Duty
Metric Cam Follower

MCFD, MCFDE

Part No.	RD		W		SD		SL	C	TL	L	R	ECC	G	BD	Track Roller Dynamic Rating	Track Roller Static Rating
With Shields	Roller Diameter		Roller Width		Stud Diameter		Stud Length	Endplate Extension	Minimum Thread Length	Length Overall	Cylindrical Suffix MCFD-xx-X	Eccentric Base Modifier MCFDE-xx				
	mm inch		mm inch		mm inch		mm inch		mm inch		mm inch	mm inch			N/lb	N/lb
	Nom.	Tol.	Nom.	Tol.	Nom.	Tol.	(Ref)	(Ref)	(Ref)	(Ref)	(Ref)	(Ref)	+05/-.15 (+.002 / -.006)	See Table		
MCFD 35	35.000 1.3780	+0/-.050 +0/-.002	18.00 .709	+0/.12 +0/-.005	16.000 .6299	+0/-.018 +0/-.0007	32.50 1.280	.80 .031	17.00 .669	52.00 2.047	500 20	N/A	N/A	N/A	16,000 3,597	18,000 4,047
MCFDE 35												0.5 .02	14 0.55	20 .79		
MCFD 35 X		+0/-.011 +0/-.0004									Cylindrical	N/A	N/A	N/A		
MCFDE 35 X												0.5 .02	14 0.55	20 .79		
MCFD 40	40.000 1.5748	+0/-.050 +0/-.002	20.00 .787	+0/.12 +0/-.009	18.000 .7087	+0/-.018 +0/-.0007	36.50 1.437	.80 .031	19.00 .748	58.00 2.283	500 20	N/A	N/A	N/A	18,000 4,047	22,000 4,946
MCFDE 40												1 .04	16 0.63	22 .87		
MCFD 40 X		+0/-.011 +0/-.0004									Cylindrical	N/A	N/A	N/A		
MCFDE 40 X												1 .04	16 0.63	22 .87		
MCFD 47	47.000 1.8504	+0/-.050 +0/-.002	24.00 .945	+0/.12 +0/-.013	20.000 .7874	+0/-.021 +0/-.0008	40.50 1.594	.80 .031	21.00 .827	66.00 2.598	500 20	N/A	N/A	N/A	27,000 6,070	32,000 7,194
MCFDE 47												1 .04	18 0.71	24 .94		
MCFD 47 X		+0/-.011 +0/-.0004									Cylindrical	N/A	N/A	N/A		
MCFDE 47 X												1 .04	18 0.71	24 .94		
MCFD 52	52.000 2.0472	+0/-.050 +0/-.002	24.00 .945	+0/.12 +0/-.017	20.000 .7874	+0/-.021 +0/-.0008	40.50 1.594	.80 .031	21.00 .827	66.00 2.598	500 20	N/A	N/A	N/A	30,000 6,745	35,000 7,869
MCFDE 52												1 .04	18 0.71	24 .94		
MCFD 52 X		+0/-.013 +0/-.0005									Cylindrical	N/A	N/A	N/A		
MCFDE 52 X												1 .04	18 0.71	24 .94		
MCFD 62	62.000 2.4409	+0/-.050 +0/-.002	29.00 1.142	+0/.12 +0/-.021	24.000 .9449	+0/-.021 +0/-.0008	49.50 1.949	.80 .031	25.00 .984	80.00 3.150	500 20	N/A	N/A	N/A	41,000 9,218	48,000 10,791
MCFDE 62												1 .04	22 0.87	28 .10		
MCFD 62 X		+0/-.013 +0/-.0005									Cylindrical	N/A	N/A	N/A		
MCFDE 62 X												1 .04	22 0.87	28 .10		

1. Standard bearing has a crowned roller outside diameter. For straight cylindrical outside roller diameter, add suffix "X". Example - MCFD-35-X.
2. Since load, lubrication method, temperature and other factors affect the maximum operating speed, it is impossible to determine precise limiting speed. The listed limiting speeds are based on lightly loaded bearings having adequate lubrication and are listed only as a design guide. If grease lubricated, frequent relubrication is required. Actual bearing testing in the specific application should be conducted if the anticipated operating speed approaches the listed limiting speed.
3. Clamping torque is based on dry threads. If threads are lubricated, use half of value shown.

Inch dimensions for reference only.
Not all parts are available from stock. Please contact customer service for availability (800) 626-2120.
For more information on bearing capabilities outside of our standard offering, please contact Application Engineering (800) 626-2093.

Heavy Duty CAMROL Bearings

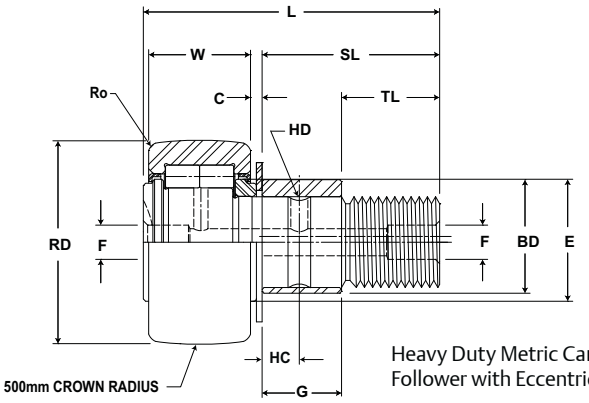

Heavy Duty Metric Cam Follower with Eccentric Bushing

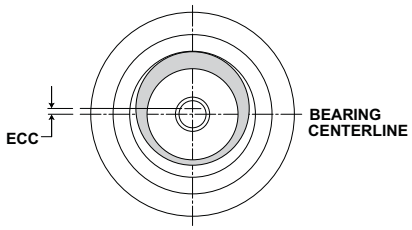

MCFD, MCFDE

Part No.	HC	HD	D	E	Ro	HBD	sdt	Thread Type	CT	LSD	WT
With Shields	Hole Center	Radial Lub. Hole Diameter	Lub. Hole Dia. / Lub. Fitting	Min. Clamping Diameter	Outer Radius (suffix X)	Housing Bore Diameter		Thread Type	Clamping Torque	Limiting Speed (Grease)	Bearing Weight
	mm inch		mm inch		mm inch				Nm in-lb	RPM	kg lb
	(Ref)	(Ref)	(Ref)	(Ref)	(Ref)	Nom.	Tol.				
MCFD 35	8.00 .315	3.00 .118	6.00 .236	21.00 .827	1.00 .039	16.000 .6299	+0/-.018 +0/-.0007	M16x1.5	85 752	6,500	.16 .36
MCFDE 35											
MCFD 35 X											
MCFDE 35 X											
MCFD 40	8.00 .315	3.00 .118	6.00 .236	23.00 .906	1.50 .059	18.000 .7087	+0/-.018 +0/-.0007	M18x1.5	85 752	5,500	.24 .53
MCFDE 40											
MCFD 40 X											
MCFDE 40 X											
MCFD 47	9.00 .354	4.00 .157	8.00 .315	27.00 1.063	1.50 .059	20.000 .7874	+0/-.021 +0/-.0008	M20x1.5	118 1,044	4,200	.38 .84
MCFDE 47											
MCFD 47 X											
MCFDE 47 X											
MCFD 52	9.00 .354	4.00 .157	8.00 .315	21.00 .827	1.50 .059	20.000 .7874	+0/-.021 +0/-.0008	M20x1.5	118 1,044	3,400	.45 .99
MCFDE 52											
MCFD 52 X											
MCFDE 52 X											
MCFD 62	11.00 .433	4.00 .157	8.00 .315	38.00 1.496	2.00 .079	24.000 .9449	+0/-.021 +0/-.0008	M24x1.5	216 1,912	2,600	.80 1.75
MCFDE 62											
MCFD 62 X											
MCFDE 62 X											

McGILL® Heavy Duty CAMROL Bearings

Basic Construction Type: Stud Type Crowned / Cylindrical Outside Diameter

Rolling Elements: Full Complement Cylindrical Roller

Bearing Material: Bearing Quality Steel

Seal Type: Metallic Shield

Lubrication: Lithium Soap Grease NLGI #2

System Configuration: Concentric / Eccentric / Heavy Stud

Mounting Feature: Slot / Hex Hole

Dimensional Interchange: ISO Standard

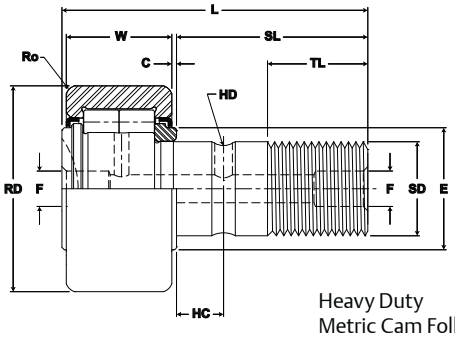

Heavy Duty Metric Cam Follower

MCFD, MCFDE

Part No.	RD		W		SD		SL	C	TL	L	R	ECC	G	BD	Track Roller Dynamic Rating	Track Roller Static Rating
With Shields	Roller Diameter		Roller Width		Stud Diameter		Stud Length	Endplate Extension	Minimum Thread Length	Length Overall	Cylindrical Suffix MCFD-xx-X	Eccentric Base Modifier MCFDE-xx				
	mm inch		mm inch		mm inch		mm inch		mm inch		mm inch	mm inch			N/lb	N/lb
	Nom.	Tol.	Nom.	Tol.	Nom.	Tol.	(Ref)	(Ref)	(Ref)	(Ref)	(Ref)	(Ref)	+05/-.15 (+.002 / -.006)	See Table		
MCFD 72	72.000 2.8346	+0/-.050 +0/-.002	29.00 1.142	+0/.12 +0/-.025	24.000 .9449	+0/-.021 +0/-.0008	49.50 1.949	.80 .031	25.00 .984	80.00 3.150	500 20	N/A	N/A	N/A	46,000 10,342	57,000 12,815
MCFDE 72												1 .04	22 0.87	28 .10		
MCFD 72 X		+0/-.013 +0/-.0005									Cylindrical	N/A	N/A	N/A		
MCFDE 72 X												1 .04	22 0.87	28 .10		
MCFD 80	80.000 3.1496	+0/-.050 +0/-.002	35.00 1.378	+0/.12 +0/-.029	30.000 1.1811	+0/-.021 +0/-.0008	63.00 2.480	1.00 .039	32.00 1.260	100.00 3.937	500 20	N/A	N/A	N/A	67,000 15,063	91,000 20,459
MCFDE 80												1.5 .06	29 1.14	35 .38		
MCFD 80 X		+0/-.015 +0/-.0006									Cylindrical	N/A	N/A	N/A		
MCFDE 80 X												1.5 .06	29 1.14	35 .38		
MCFD 90	90.000 3.5433	+0/-.050 +0/-.002	35.00 1.378	+0/.12 +0/-.033	30.000 1.1811	+0/-.021 +0/-.0008	63.00 2.480	1.00 .039	32.00 1.260	100.00 3.937	500 20	N/A	N/A	N/A	67,000 15,063	101,000 22,707
MCFDE 90												1.5 .06	29 1.14	35 .38		
MCFD 90 X		+0/-.015 +0/-.0006									Cylindrical	N/A	N/A	N/A		
MCFDE 90 X												1.5 .06	29 1.14	35 .38		

1. Standard bearing has a crowned roller outside diameter. For straight cylindrical outside roller diameter, add suffix "X". Example - MCFD-35-X.
2. Since load, lubrication method, temperature and other factors affect the maximum operating speed, it is impossible to determine precise limiting speed. The listed limiting speeds are based on lightly loaded bearings having adequate lubrication and are listed only as a design guide. If grease lubricated, frequent relubrication is required. Actual bearing testing in the specific application should be conducted if the anticipated operating speed approaches the listed limiting speed.
3. Clamping torque is based on dry threads. If threads are lubricated, use half of value shown.

Metric dimensions for reference only.
Not all parts are available from stock. Please contact customer service for availability (800) 626-2120.
For more information on bearing capabilities outside of our standard offering, please contact Application Engineering (800) 626-2093.

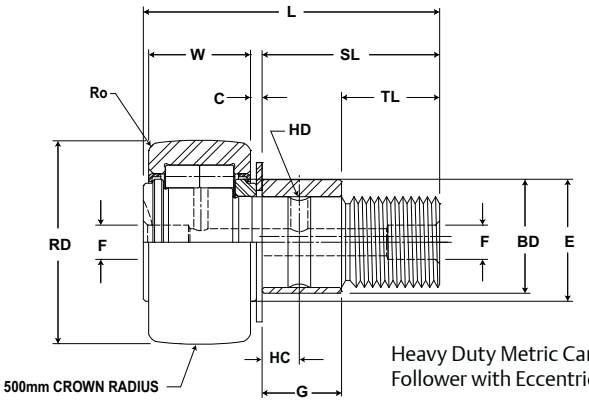

Heavy Duty Metric Cam Follower with Eccentric Bushing

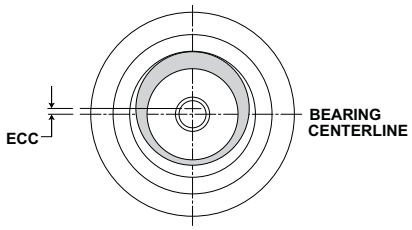

MCFD, MCFDE

Part No.	HC	HD	D	E	Ro	HBD	sdt	Thread Type	CT	LSD	WT
With Shields	Hole Center	Radial Lub. Hole Diameter	Lub. Hole Dia. / Lub. Fitting	Min. Clamping Diameter	Outer Radius (suffix X)	Housing Bore Diameter		Thread Type	Clamping Torque	Limiting Speed (Grease)	Bearing Weight
	mm inch		mm inch		mm inch				Nm in-lb	RPM	kg lb
	(Ref)	(Ref)	(Ref)	(Ref)	(Ref)	Nom.	Tol.				
MCFD 72	12.00 .472	4.00 .157	8.00 .315	44.00 1.732	2.00 .079	24.000 .9449	+0/-.021 +0/-.0008	M24x1.5	216 1,912	2,100	1.01 2.23
MCFDE 72											
MCFD 72 X											
MCFDE 72 X											
MCFD 80	15.00 .591	4.00 .157	8.00 .315	47.00 1.850	2.00 .079	30.000 1.1811	+0/-.021 +0/-.0008	M30x1.5	441 3,903	1,800	1.54 3.39
MCFDE 80											
MCFD 80 X											
MCFDE 80 X											
MCFD 90	15.00 .591	4.00 .157	8.00 .315	47.00 1.850	2.00 .079	30.000 1.1811	+0/-.021 +0/-.0008	M30x1.5	441 3,903	1,800	1.96 4.32
MCFDE 90											
MCFD 90 X											
MCFDE 90 X											

McGILL® Heavy Duty CAMROL Bearings

Basic Construction Type: Yoke Type Crowned / Cylindrical Outside Diameter

Rolling Elements: Full Complement Cylindrical Roller

Bearing Material: Bearing Quality Steel

Seal Type: Metallic Shield

Lubrication: Lithium Soap Grease NLGI #2

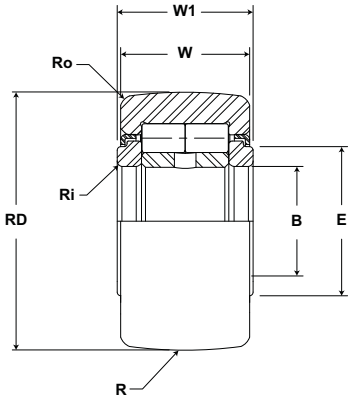

MCYRD

Part No.	RD		W		B		W1		R	Track Roller Dynamic Rating	Track Roller Static Rating
With Shields	Roller Diameter		Roller Width		Bore Diameter		Overall Width		Cylindrical Suffix MCF-X		
	mm inch		mm inch		mm inch		mm inch		mm inch	N/lb	N/lb
	Nom.	Tol.	Nom.	Tol.	Nom	Tol	Nom	Tol	Radius		
MCYRD 15	35.000 1.3780	+0/-.050 +0/-.002	18.00 .709	+0/.12 +0/-.005	15.000 .5906	+0/-.008 +0/-.0003	19.00 .748	+0/-0.21 +0/-0.0008	500 20	16,000 3,597	18,000 4,047
MCYRD 15 X		+0/-0.011 +0/- 0.0004							Cylindrical		
MCYRD 17	40.000 1.5748	+0/-.050 +0/-.002	20.00 .787	+0/.12 +0/-.009	17.000 .6693	+0/-.008 +0/-.0003	21.00 .827	+0/-0.21 +0/-0.0008	500 20	18,000 4,047	22,000 4,946
MCYRD 17 X		+0/-0.011 +0/- 0.0004							Cylindrical		
MCYRD 20	47.000 1.8504	+0/-.050 +0/-.002	24.00 .945	+0/.12 +0/-.013	20.000 .7874	+0/-.010 +0/-.0004	25.00 .984	+0/-0.21 +0/-0.0008	500 20	27,000 6,070	32,000 7,194
MCYRD 20 X		+0/-0.011 +0/- 0.0004							Cylindrical		
MCYRD 25	52.000 2.0472	+0/-.050 +0/-.002	24.00 .945	+0/.12 +0/-.017	25.000 .9843	+0/-.010 +0/-.0004	25.00 .984	+0/-0.21 +0/-0.0008	500 20	30,000 6,745	35,000 7,869
MCYRD 25 X		+0/-0.013 +0/- 0.0005							Cylindrical		
MCYRD 30	62.000 2.4409	+0/-.050 +0/-.002	28.00 1.102	+0/.12 +0/-.021	30.000 1.1811	+0/-.010 +0/-.0004	29.00 1.142	+0/-0.21 +0/-0.0008	500 20	41,000 9,218	47,000 10,567
MCYRD 30 X		+0/-0.013 +0/- 0.0005							Cylindrical		
MCYRD 35	72.000 2.8346	+0/-.050 +0/-.002	28.00 1.102	+0/.12 +0/-.025	35.000 1.3780	+0/-.012 +0/-.0005	29.00 1.142	+0/-0.21 +0/-0.0008	500 20	46,000 10,342	57,000 12,815
MCYRD 35 X		+0/-0.013 +0/- 0.0005							Cylindrical		
MCYRD 40	80.000 3.1496	+0/-.050 +0/-.002	30.00 1.181	+0/.12 +0/-.029	40.000 1.5748	+0/-.012 +0/-.0005	32.00 1.260	+0/-0.25 +0/-0.009	500 20	64,000 14,388	71,000 15,962
MCYRD 40 X		+0/-0.015 +0/- 0.0006							Cylindrical		
MCYRD 45	85.000 3.3465	+0/-.050 +0/-.002	30.00 1.181	+0/.12 +0/-.033	45.000 1.7717	+0/-.012 +0/-.0005	32.00 1.260	+0/-0.25 +0/-0.009	500 20	67,000 15,063	72,000 16,187
MCYRD 45 X		+0/-0.015 +0/- 0.0006							Cylindrical		
MCYRD 50	90.000 3.5433	+0/-.050 +0/-.002	30.00 1.181	+0/.12 +0/-.037	50.000 1.9685	+0/-.012 +0/-.0005	32.00 1.260	+0/-0.25 +0/-0.009	500 20	71,000 15,962	77,000 17,311
MCYRD 50 X		+0/-0.015 +0/- 0.0006							Cylindrical		

1. Standard bearing has a crowned roller outside diameter. For straight cylindrical outside roller diameter, add suffix "X". Example - MCYRD-15-X.
2. Since load, lubrication method, temperature and other factors affect the maximum operating speed, it is impossible to determine precise limiting speed. The listed limiting speeds are based on lightly loaded bearings having adequate lubrication and are listed only as a design guide. If grease lubricated, frequent relubrication is required. Actual bearing testing in the specific application should be conducted if the anticipated operating speed approaches the listed limiting speed.
3. Positive clamping across endplates required to ensure proper end play after mounting.

Metric dimensions for reference only.
Not all parts are available from stock. Please contact customer service for availability (800) 626-2120.
For more information on bearing capabilities outside of our standard offering, please contact Application Engineering (800) 626-2093.

MCYRD

E	Ro	Ri	LF	LFT	TF	TFT	LSD	WT
Min. Clamping Diameter	Outer Corner Radius	Inner Corner Radius	Recommended Shaft Diameters				Limiting Speed (Grease)	Bearing Weight
			Loose Fit		Light Fit			
mm inch		mm inch	mm inch		mm inch		RPM	kg lb
(Ref)	(Ref)	(Ref)	Nom	Tol	Nom	Tol		
20.00 .787	.60 .024	.30 .012	14.994 .5903	+0/-.011 +0/-.0004	15.000 .5906	+0/-.011 +0/-.0004	6,500	.10 .22
22.00 .866	1.00 .039	.30 .012	16.994 .6691	+0/-.011 +0/-.0004	17.000 .6693	+0/-.011 +0/-.0004	5,500	.15 .32
27.00 1.063	1.00 .039	.30 .012	19.993 .7871	+0/-.013 +0/-.0005	20.000 .7874	+0/-.013 +0/-.0005	4,200	.25 .54
31.00 1.220	1.00 .039	.30 .012	24.993 .9840	+0/-.013 +0/-.0005	25.000 .9843	+0/-.013 +0/-.0005	3,400	.28 .62
38.00 1.496	1.00 .039	.30 .012	29.993 1.1808	+0/-.013 +0/-.0005	30.000 1.1811	+0/-.013 +0/-.0005	2,600	.46 1.02
44.00 1.732	1.10 .043	.60 .024	34.991 1.3776	+0/-.016 +0/-.0006	35.000 1.3780	+0/-.016 +0/-.0006	2,100	.63 1.39
51.00 2.008	1.10 .043	.60 .024	39.991 1.5744	+0/-.016 +0/-.0006	40.000 1.5748	+0/-.016 +0/-.0006	1,600	.82 1.80
55.00 2.165	1.10 .043	.60 .024	44.991 1.7713	+0/-.016 +0/-.0006	45.000 1.7717	+0/-.016 +0/-.0006	1,400	.89 1.95
60.00 2.362	1.10 .043	.60 .024	45.991 1.8107	+0/-.016 +0/-.0006	50.000 1.9685	+0/-.016 +0/-.0006	1,300	.95 2.09

McGILL® *Special Duty CAMROL Bearings*

McGill Special Duty Cam Followers

Special-Duty CAMROL bearings are available feature black oxide treated bearing steel in both inch and metric sizes for your motion control needs. Designed for severe applications, bearings thick section outer race, together with a caged (retainer) needle roller set provides the basic foundation for a cam follower suited for severe duty. Integral flange construction, on stud version bearings help maintain bearing integrity throughout the service life. A metallic face plug seal provides a wear resistant seal while the heavy duty seal provides a barrier for contaminate entry to support reduced maintenance applications. Within the following section you can learn more about these feature and how the can be applied to your tough application.

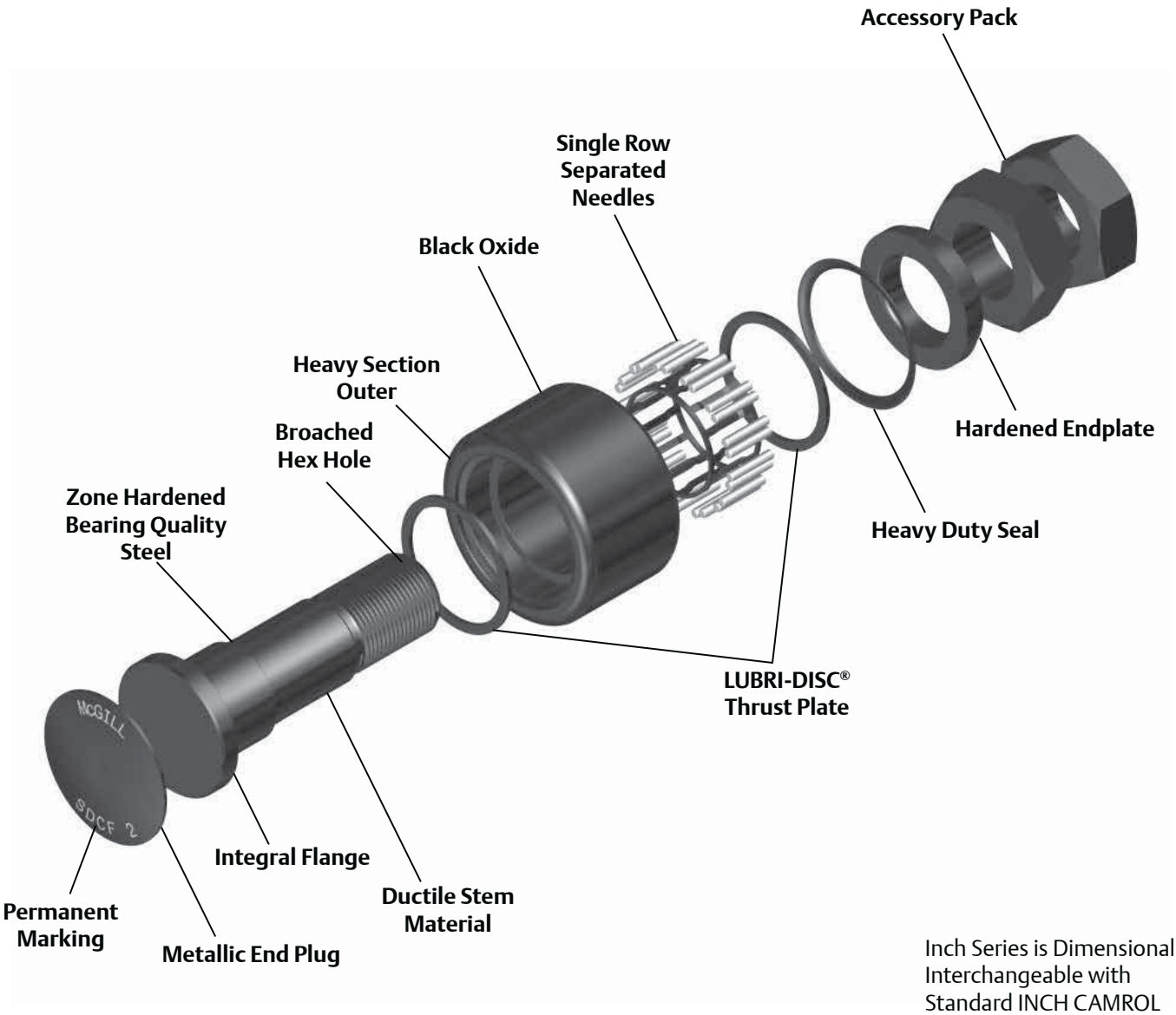

Inch Series is Dimensionally Interchangeable with Standard INCH CAMROL Factory Filled Synthetic Grease.

Special Duty Cam Follower Nomenclature

Series Identifier
- SD - Special Duty

Basic Type
- CF - Cam Follower
- MCF - Metric Cam Follower

Optional Prefix
- E - Eccentric Bushing

Size
- CF - O.D. In Inches
- MCF - O.D. In mm

SD CF E - 1 1/2

McGILL® *Special Duty CAMROL Bearings*

Features and Benefits

Retainer Type

The retainer (cage) option provides heat-treated steel cage for improved durability and wear resistance. The needle separation produces larger lubrication reservoir and helps achieve higher bearing speeds. The cages are designed with two rollers per pockets to help improve static and dynamic load ratings.

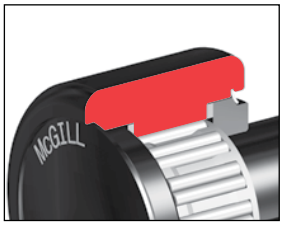

Heavy Section Outer

The heavy section outer helps support radial loading and provide proper rolling element support.

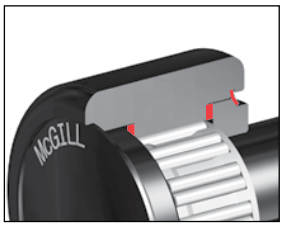

LUBRI-DISC® Seal

The CAMROL standard for seals, the LUBRI-DISC seal helps keep contaminants out and lubrication in the bearing, with an integral back plate to separate the metal to metal contact between the outer ring and endplate(s) or flange. The back plate feature reduces friction resulting in lower operating temperatures which can extend grease life and allowing for higher operating speeds. The seal also includes vents to help prevent seal blowout during relubrication, while the outer raceway is machined with a reservoir for additional lubricant capacity. The LUBRI-DISC seal option has a good balance of sealing, lubricant capacity, and low drag operation essential to a precision cam follower suited for most industrial applications.

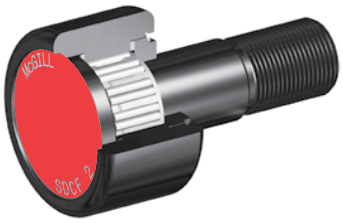

End Plug Seal

Metallic Plug seal helps keep contamination out of the bearing and resistant to weld spatter, abrasive contaminants and washout. The plug installed into the outer encapsulates the flange side of the bearing resulting in a large grease reservoir and wear resistant bearing seal.

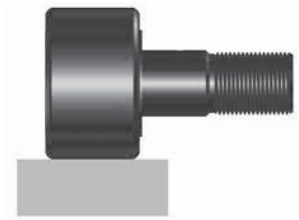

Cylindrical Outside Diameter (OD)

The cylindrical OD can improve performance in certain applications such as improved track capacity by maximizing the contact area with the track.

Features and Benefits continued

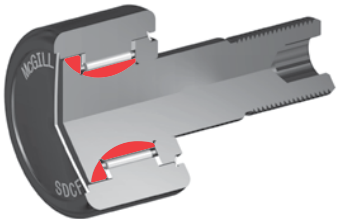

Zone Hardened Raceways

Heat treatment used to precisely harden working surfaces of the raceway and flange. The hardened surfaces provide support for the rolling element contact stresses, while keeping the core of the inner ductile to help absorb shock loads.

Hex Hole (Broached)

The hex hole can aide in the installation and removal of stud type cam followers by increasing the holding power over a standard screw driver or milled slot.

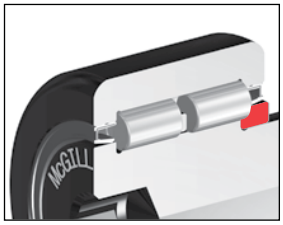

Hardened Endplate

Similar to the flange, the endplate must provide a seal surface for the LUBRI-DISC seal and resist wear from incidental contact with the outer or rollers. The hardened and ground endplate provides a sealing surface with LUBRI-DISC® seal option.

McGILL® *Special Duty CAMROL Bearings*

Features and Benefits

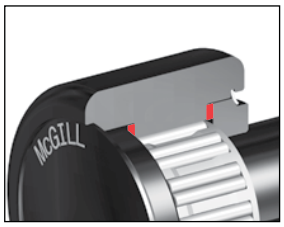

LUBRI-DISC® Thrust Washer

Utilizing the LUBRI-DISC properties as a back plate to separate the metal to metal contact between the outer ring and endplate(s) or flange. The back plate feature reduces friction resulting in lower operating temperatures which can extend grease life and allowing for higher operating speeds.

Factory Grease Fill

The cam follower and cam yoke roller bearings are factory lubricated with synthetic grease. Contact Application Engineering when application conditions require special lubricants

Black Oxide Finish

Bearings have a black oxide finish on all external surfaces.

Permanent Marking

Part number permanently marked on bearing face, helps bearing identification after years of service.

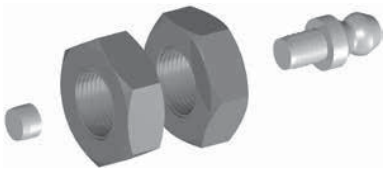

Installation Accessory Pack

All McGill stud type special duty Cam followers include (2) jam nuts to ensure proper thread type (Metric/ Inch), grease fitting and oil hole plug to help provide proper lubrication path to the rolling elements and prevent contamination from entering the bearing through a unused oil hole.

Options

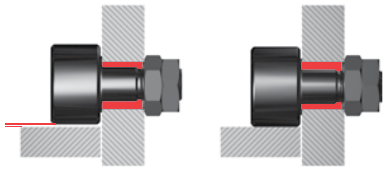

Eccentric Stud

Eccentric stud option provides a means of adjusting the radial position of the bearing which can improve the load sharing of inline bearing combinations. Cam follower load sharing helps reduce operation costs by reducing premature failures due to overloaded bearings, the need of precise mounting hole location tolerances and providing ability to realign bearing due to track wear.

Custom Capabilities

- *Customer specified factory grease fill*
- *Stud or thread length modifications*
- *Roller diameter variations or tolerances*
- *Cam followers grouped or matched diameter tolerance / run out sets*
- *Custom engineered to order designs*

McGILL® Special Duty CAMROL Bearings

Basic Construction Type: Stud Type Crowned / Cylindrical Outside Diameter

Rolling Elements: Retained (Caged) Needle Roller

Bearing Material: Bearing Quality Steel

Seal Type: Metal Extension Plug and LUBRI-DISC® Seal

Lubrication: Synthetic Grease NLGI #2

System Configuration: Concentric / Eccentric

Mounting Feature: Hex Hole on Thread Face

Dimensional Interchange: Standard CAMROL Bearing

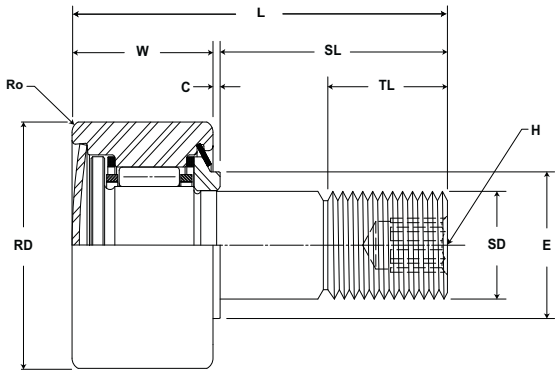

SDCF

Part No.	RD		W		SD		SL	C	TL	L	Track Roller Dynamic Rating	Track Roller Static Rating
With LUBRI-DISC Seals	Roller Diameter		Roller Width		Stud Diameter		Stud Length	Endplate Extension	Minimum Thread Length	Length Overall		
	inch mm		inch mm		inch mm		inch mm		inch mm		lb/N	lb/N
	Nom.	Tol.	Nom.	Tol.	Nom.	Tol.	(Ref)	(Ref)	(Ref)	(Ref)		
SDCF 1	1.000 25.40	+0 / -0.001 +0 / - 0.03	.6250 15.875	+0 / -0.010 +0 / - 0.25	.4375 11.113	+0.001 /-0 +0.03 / - 0	1.00 25.4	.03 .8	.50 12.7	1.09 27.8	1,280 5,693	1,450 6,450
SDCF 1 1/4	1.250 31.75	+0 / -0.001 +0 / - 0.03	.7500 19.050	+0 / -0.010 +0 / - 0.25	.5000 12.700	+0.001 /-0 +0.03 / - 0	1.25 31.8	.03 .8	.63 15.9	1.28 32.5	1,630 7,250	2,050 9,118
SDCF 1 1/2	1.500 38.10	+0 / -0.001 +0 / - 0.03	.8750 22.225	+0 / -0.010 +0 / - 0.25	.6250 15.875	+0.001 /-0 +0.03 / - 0	1.50 38.1	.03 .8	.75 19.1	1.53 38.9	2,450 10,898	3,570 15,879
SDCF 1 3/4	1.750 44.45	+0 / -0.001 +0 / - 0.03	1.0000 25.400	+0 / -0.010 +0 / - 0.25	.7500 19.050	+0.001 /-0 +0.03 / - 0	1.75 44.5	.03 .8	.88 22.2	1.78 45.2	3,000 13,344	4,450 19,794
SDCF 2	2.000 50.80	+0 / -0.001 +0 / - 0.03	1.2500 31.750	+0 / -0.010 +0 / - 0.25	.8750 22.225	+0.001 /-0 +0.03 / - 0	2.00 50.8	.03 .8	2.00 50.8	2.16 54.8	4,000 17,792	6,700 29,802
SDCF 2 1/2	2.500 63.50	+0 / -0.001 +0 / - 0.03	1.5000 38.100	+0 / -0.010 +0 / - 0.25	1.0000 25.400	+0.001 /-0 +0.03 / - 0	2.25 57.2	.03 .8	2.25 57.2	2.53 64.3	5,930 26,377	10,400 46,259
SDCF 3	3.000 76.20	+0 / -0.001 +0 / - 0.03	1.7500 44.450	+0 / -0.010 +0 / - 0.25	1.2500 31.750	+0.001 /-0 +0.03 / - 0	2.50 63.5	.03 .8	2.50 63.5	3.03 77.0	10,500 46,704	19,700 87,626
SDCF 4	4.000 101.60	+0 / -0.001 +0 / - 0.03	2.2500 57.150	+0 / -0.010 +0 / - 0.25	1.5000 38.100	+0.001 /-0 +0.03 / - 0	3.50 88.9	.03 .8	3.50 88.9	3.78 96.0	12,700 56,490	23,200 103,194

Clamping torque is based on dry threads. If threads are lubricated, use half of value shown.

Metric dimensions for reference only.
Not all parts are available from stock. Please contact customer service for availability (800) 626-2120.
For more information on bearing capabilities outside of our standard offering, please contact Application Engineering (800) 626-2093.

SDCF

Part No. With LUBRI-DISC Seals	H Hex Hole inch mm (Ref)	E Min. Clamping Diameter inch mm (Ref)	Ro Outer Corner Radius inch mm (Ref)	Housing Bore Diameter inch mm Nom.	Housing Bore Diameter inch mm Tol.	Thread Type	Clamping Torque in-lb	Limiting Speed RPM	WT Bearing Weight lb kg
SDCF 1	.25 6.4	.59 15.1	.03 .8	.44 11.1	+.0002/-.0003 +.0005/-.0008	7/16-20	250 28	12,500	.16 .07
SDCF 1 1/4	.25 6.4	.83 21.0	.03 .8	.50 12.7	+.0002/-.0003 +.0005/-.0008	1/2-20	350 40	8,100	.29 .13
SDCF 1 1/2	.31 7.9	.95 24.2	.06 1.6	.63 15.9	+.0002/-.0003 +.0005/-.0008	5/8-18	650 73	6,300	.49 .22
SDCF 1 3/4	.31 7.9	1.11 28.2	.06 1.6	.75 19.1	+.0002/-.0003 +.0005/-.0008	3/4-16	1,250 141	5,000	.80 .36
SDCF 2	.44 11.1	1.28 32.5	.09 2.4	.88 22.2	+.0002/-.0003 +.0005/-.0008	7/8-14	1,500 170	3,900	1.30 .59
SDCF 2 1/2	.50 12.7	1.56 39.7	.09 2.4	.00 25.4	+.0002/-.0003 +.0005/-.0008	1-14	2,250 254	3,100	2.33 1.06
SDCF 3	.75 19.1	2.14 54.4	.13 3.2	.25 31.8	+.0002/-.0003 +.0005/-.0008	1 1/4-12	3,450 390	2,200	3.87 1.76
SDCF 4	.75 19.1	2.63 66.7	.13 3.2	.50 38.1	+.0002/-.0003 +.0005/-.0008	1 1/2-12	5,000 565	1,900	8.89 4.03

McGILL® Special Duty CAMROL Bearings

Basic Construction Type: Stud Type Crowned / Cylindrical Outside Diameter

Rolling Elements: Retained (Caged) Needle Roller

Bearing Material: Bearing Quality Steel

Seal Type: Metal Extension Plug and Rubber Lip Seal

Lubrication: Synthetic Grease NLGI #2

System Configuration: Concentric / Eccentric

Mounting Feature: Hex Hole on Thread Face

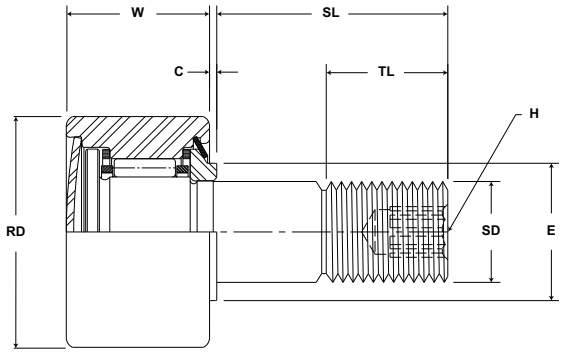

SDMCF

Part No.	RD		W		SD		SL	C	TL	L	R	ECC	G	BD	Track Roller Dynamic Rating	Track Roller Static Rating
With LUBRI-DISC Seals	Roller Diameter		Roller Width		Stud Diameter		Stud Length	Endplate Extension	Minimum Thread Length	Length Overall	Cylindrical Prefix SDCF-XX	Eccentric Base Modifier SDCFE-XX				
	mm inch		mm inch		mm inch		mm inch		mm inch		mm inch	mm inch			N/lb	N/lb
	Nom.	Tol.	Nom.	Tol.	Nom.	Tol.	(Ref)	(Ref)	(Ref)	(Ref)	Radius	(Ref)	+0/-.001 (+0/-.03)	± .001 (± .03)		
SDMCF 25	25.00 .984	+0 / -0.02 +0 / - 0.001	16.00 .630	+0 / -0.25 +0 / - 0.010	10.00 .394	+0 / -0.02 +0 / - 0.001	25 .98	.8 .03	14 .55	27 1.1	500 20	N/A	N/A	N/A	5,690 1,279	6,450 1,450
SDMCFE 25											500 20	.5 .02	10 .39	13 .51		
SDMCF 40	40.00 1.575	+0 / -0.02 +0 / - 0.001	25.00 .984	+0 / -0.25 +0 / - 0.010	16.00 .630	+0 / -0.02 +0 / - 0.001	30 1.18	.8 .03	17 .67	42 1.6	500 20	N/A	N/A	N/A	10,890 2,448	15,900 3,575
SDMCFE 40											500 20	.5 .02	14 .55	20 .79		
SDMCF 50	50.00 1.969	+0 / -0.02 +0 / - 0.001	30.00 1.181	+0 / -0.25 +0 / - 0.010	20.00 .787	+0 / -0.02 +0 / - 0.001	40 1.57	.8 .03	22 .87	51 2.0	500 20	N/A	N/A	N/A	17,750 3,991	29,800 6,700
SDMCFE 50											500 20	1 .04	18 .71	24 .94		
SDMCF 60	60.00 2.362	+0 / -0.02 +0 / - 0.001	35.00 1.378	+0 / -0.25 +0 / - 0.010	24.00 .945	+0 / -0.02 +0 / - 0.001	50 1.97	.8 .03	27 1.06	60 2.4	500 20	N/A	N/A	N/A	26,380 5,931	46,300 10,409
SDMCFE 60											500 20	1 .04	22 .87	28 .10		
SDMCF 80	80.00 3.150	+0 / -0.02 +0 / - 0.001	45.00 1.772	+0 / -0.25 +0 / - 0.010	30.00 1.181	+0 / -0.02 +0 / - 0.001	60 2.36	.8 .03	32 1.26	76 3.0	500 20	N/A	N/A	N/A	4,680 1,052	87,600 19,694
SDMCFE 80											500 20	.5 .06	29 .14	35 .38		
SDMCF 100	100.00 3.937	+0 / -0.02 +0 / - 0.001	50.00 1.969	+0 / -0.25 +0 / - 0.010	36.00 1.417	+0 / -0.02 +0 / - 0.001	80 3.15	.8 .03	42 1.65	87 3.4	800 31	N/A	N/A	N/A	56,500 12,702	103,200 23,201

Clamping torque is based on dry threads. If threads are lubricated, use half of value shown.

Metric dimensions for reference only.
Not all parts are available from stock. Please contact customer service for availability (800) 626-2120.
For more information on bearing capabilities outside of our standard offering, please contact Application Engineering (800) 626-2093.

SDMCF

Part No.	H Hex Hole mm inch (Ref)	E Min. Clamping Diameter mm inch (Ref)	Ro Outer Corner Radius mm inch (Ref)	Housing Bore Diameter mm inch Nom.	Housing Bore Diameter mm inch Tol.	Thread Type	Clamping Torque Nm in-lb	WT Bearing Weight kg lb
SDMCF 25	5 .20	15.1 .59	1 .04	10.00 .394	+.025/-.000 +.001/-.000	M10x1.25	57 6	.06 .14
SDMCFE 25								
SDMCF 40	8 .31	24.1 .95	1 .04	16.00 .630	+.025/-.000 +.001/-.004	M16x1.5	85 10	.26 .57
SDMCFE 40								
SDMCF 50	10 .39	32.5 1.28	1 .04	20.00 .787	+.025/-.000 +.001/-.008	M20x1.5	85 10	.50 1.10
SDMCFE 50								
SDMCF 60	12 .47	39.6 1.56	1 .04	24.00 .945	+.025/-.000 +.001/-.012	M24x2	118 13	.85 1.86
SDMCFE 60								
SDMCF 80	14 .55	54.2 2.13	2 .08	30.00 .181	+.025/-.000 +.001/-.016	M30x2	118 13	1.89 4.16
SDMCFE 80								
SDMCF 100	17 .67	66.5 2.62	2 .08	36.00 .417	+.025/-.000 +.001/-.020	M36x3	118 13	3.36 7.40

McGill TRAKROL Followers

TRAKROL bearings feature black oxide treated bearing steel and utilize either a precision ball or tapered roller bearing insert for longer operating life under combination radial and thrust loads. The capacity for combination loads allow the TRAKROL bearing to be available in plain (cylindrical), V-groove, and flanged O.D. in both stud and yoke styles. Small sizes (<3" OD or point diameter) use sealed ball bearing inserts along with a NYLAPLATE seal for additional protection. Stud type configurations utilize a metal end plug seal on the roller face providing a long lasting seal. Both bearing types provide a large internal grease reservoir along with special sealing makes TRAKROL bearings an excellent choice where reduced maintenance is required.

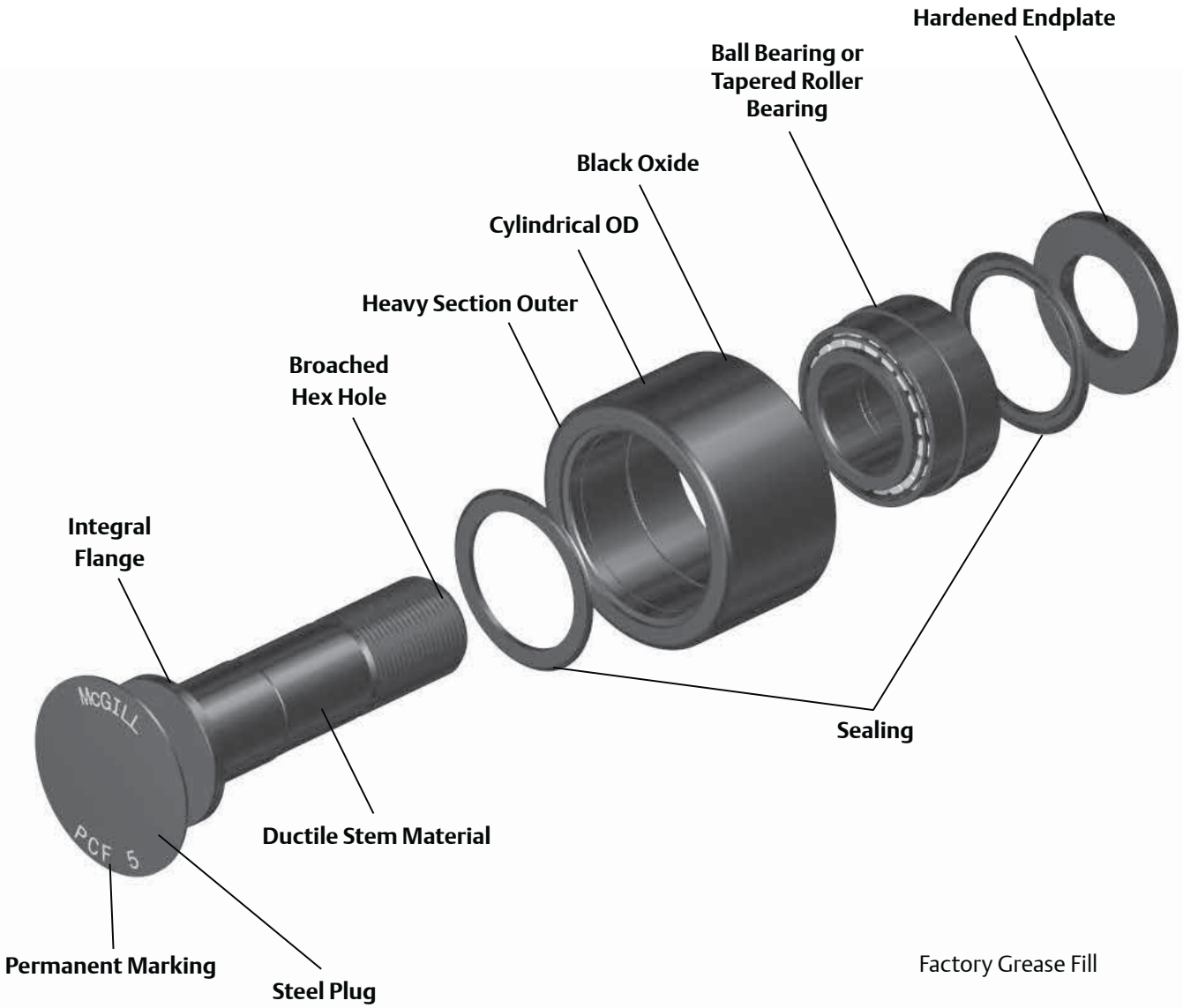

Factory Grease Fill

TRAKROL Nomenclature

Series Identifier
- P – Plain O.D. Profile
- V – V-Groove O.D. Profile
- F – Flange O.D. Profile

Basic Type
- CF - Cam Follower
- CYR - Cam Yoke Roller

Optional Prefix
- E - Eccentric Bushing

Size
- O.D. - In Inches (Point Diameter for V-Type)

P CF E - 3

Features and Benefits

Configurations

TRAKROL® bearings feature precision ball bearings or tapered roller bearings to help provide longer life when subjected to a combination of radial and thrust loads.

Plain Series

Plain OD bearings are generally used to support radial loads. Can also act as a "float" bearing when used in conjunction with a flange or V-Groove type.

Flanged Series

Flanged OD bearings are popular in guide rail applications since integral flange help direct the load axially.

V-Groove Series

Typically used with "V" shaped tracks for both guidance and radial support. The configuration of the track reduces the amount of sediment build-up on the track.

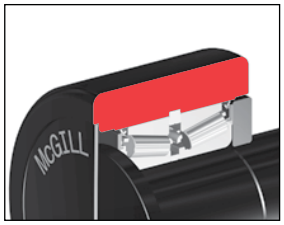

Heavy Section Outer

The heavy section outer helps support radial loading and provide proper rolling element support.

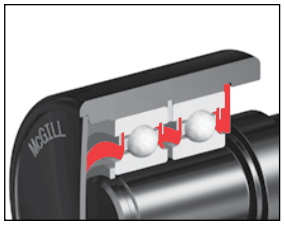

Sealing

All TRAKROL bearing utilize rubber lip seals to help improve sealing and grease retention. TRAKROL bearings under 3" feature a ball bearing insert along with a NYLAPLATE wiping seal for addition protection. The NYLAPLATE seal is exclusive to McGill TRAKROL bearings and complements the rubber lip seal provided with the bearing insert.

Features and Benefits continued

Steel Plug

Metallic Plug seal helps keep continuation out the bearing and is resistant to weld spatter, abrasive contaminants and washout.

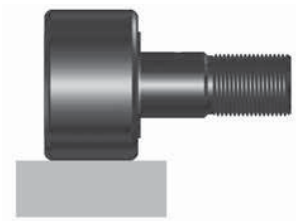

Cylindrical Outside Diameter (OD)

The cylindrical OD can improve performance in certain applications such as improved track capacity by maximizing the contact area with the track.

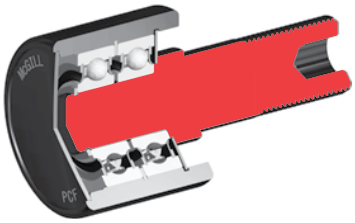

Ductile Material

Ductile stem helps resist shock loads.

Factory Grease Fill

The bearings are factory lubricated with medium temperature grease. Contact Application Engineering when application conditions require special lubricants.

Black Oxide Finish

Bearings have a black oxide finish on all external surfaces.

Permanent Marking

Part number permanently marked on bearing face, helps bearing identification after years of service.

McGILL® TRAKROL Cam Follower Bearings

Basic Construction Type: Stud Type Cylindrical Outside Diameter

Rolling Elements: Ball or Tapered Roller Bearing Insert

Bearing Material: Bearing Quality Steel

Seal Type: Metal Extension Plug and Rubber Lip Seal. Ball Bearing has Additional NYLAPLATE Seal

Lubrication: Polyurea Thickened Grease NLGI #2

Stem Configuration: Concentric / Eccentric

Mounting Feature: Hex Hole on Thread Face

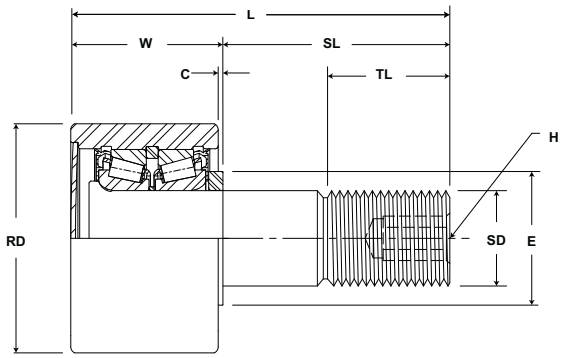

PCF

Part No.	Insert Type	RD	W	SD		SL	C	TL	L	Track Roller Dynamic Rating	Track Roller Dynamic Thrust Rating*	Track Roller Static Rating
With LUBRI-DISC Seals	Ball or Tapered Roller Bearing	Roller Diameter	Roller Width	Stud Diameter		Stud Length	Endplate Extension	Thread Length	Length Overall			
		inch mm		inch mm		inch mm		inch mm		lb/N	lb/N	lb/N
		(Ref)	(Ref)	Nom	Tol	(Ref)	(Ref)	Min	(Ref)			
PCF 1 1/2	BB	1.50 38.1	1.19 30.2	.625 15.9	+0 / -0.001 +0 / - 0.03	1.500 38.10	.06 1.6	.75 19.1	2.69 68.3	2,520 11,209	1,320 5,871	1,370 6,094
PCFE 1 1/2												
PCF 1 3/4	BB	1.75 44.5	1.19 30.2	.750 19.1	+0 / -0.001 +0 / - 0.03	1.750 44.45	.06 1.6	.88 22.2	2.94 74.6	2,520 11,209	1,320 5,871	1,370 6,094
PCFE 1 3/4												
PCF 2	BB	2.00 50.8	1.69 42.9	.875 22.2	+0 / -0.001 +0 / - 0.03	2.000 50.80	.06 1.6	1.13 28.6	3.69 93.7	3,490 15,524	1,830 8,140	2,000 8,896
PCFE 2												
PCF 2 1/4	BB	2.25 57.2	1.69 42.9	.875 22.2	+0 / -0.001 +0 / - 0.03	2.000 50.80	.06 1.6	1.13 28.6	3.69 93.7	3,490 15,524	1,830 8,140	2,000 8,896
PCFE 2 1/4												
PCF 2 1/2	BB	2.50 63.5	1.69 42.9	1.00 25.4	+0 / -0.001 +0 / - 0.03	2.250 57.15	.06 1.6	1.50 38.1	3.94 100.0	5,120 22,774	2,680 11,921	3,120 13,878
PCFE 2 1/2												
PCF 3	TRB	3.00 76.2	2.00 50.8	1.25 31.8	+0 / -0.001 +0 / - 0.03	2.500 63.50	.06 1.6	1.75 44.5	4.50 114.3	14,300 63,606	5,790 25,754	16,000 71,168
PCFE 3												
PCF 3 1/4	TRB	3.25 82.6	2.00 50.8	1.25 31.8	+0 / -0.001 +0 / - 0.03	2.500 63.50	.06 1.6	1.75 44.5	4.50 114.3	14,300 63,606	5,790 25,754	16,000 71,168
PCFE 3 1/4												
PCF 3 1/2	TRB	3.50 88.9	2.00 50.8	1.25 31.8	+0 / -0.001 +0 / - 0.03	2.750 69.85	.06 1.6	1.75 44.5	4.75 120.7	14,300 63,606	5,790 25,754	16,000 71,168
PCFE 3 1/2												
PCF 4	TRB	4.00 101.6	2.00 50.8	1.25 31.8	+0 / -0.001 +0 / - 0.03	2.750 69.85	.06 1.6	1.75 44.5	4.75 120.7	14,300 63,606	5,790 25,754	16,000 71,168
PCFE 4												
PCF 4 1/2	TRB	4.50 114.3	2.00 50.8	1.25 31.8	+0 / -0.001 +0 / - 0.03	2.750 69.85	.06 1.6	1.75 44.5	4.75 120.7	14,300 63,606	5,790 25,754	16,000 71,168
PCF 5												
PCF 6	TRB	6.00 152.4	3.00 76.2	2.50 63.5	+0 / -0.001 +0 / - 0.03	5.500 139.70	.06 1.6	3.25 82.6	8.50 215.9	35,800 159,238	14,200 63,162	62,000 275,776
PCF 7												
PCF 8	TRB	8.00 203.2	3.00 76.2	2.50 63.5	+0 / -0.001 +0 / - 0.03	5.500 139.70	.06 1.6	3.25 82.6	8.50 215.9	35,800 159,238	14,200 63,162	62,000 275,776

*Dynamic thrust load rating based on application of a centric, axial load. Fatigue life calculations for combined radial and thrust loading require special considerations and Application Engineering should be contacted.
Metric dimensions for reference only.
Not all parts are available from stock. Please contact customer service for availability (800) 626-2120.
For more information on bearing capabilities outside of our standard offering, please contact Application Engineering (800) 626-2093.

TRAKROL Cam Follower Bearings

McGILL®

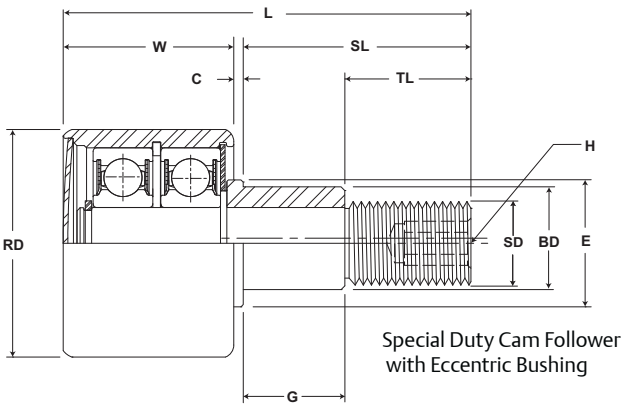

Special Duty Cam Follower with Eccentric Bushing

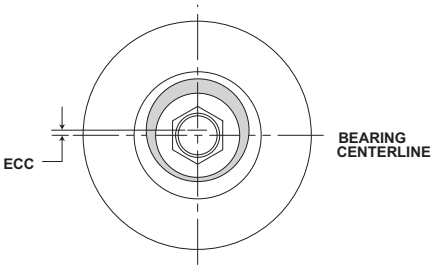

PCF

Part No.	ECC	G	BD	H	E	Housing Bore Diameter		Thread Type	Clamping Torque	WT
With LUBRI-DISC Seals	Eccentric Base Modifier PCFE-XX			Hex Hole	Min. Clamping Diameter					Bearing Weight
	inch mm			inch mm		inch mm			in-lb Nm	lb kg
	(Ref)	+0/-.010	±.001	(Ref)	(Ref)	Nom.	Tol.			
PCF 1 1/2	-	-	-	.2500 6.350	.75 19.1	.6260 15.900	±.001 ±.025	5/8-18	650 74	.51 .23
PCFE 1 1/2	.03 .8	.73 18.5	.875 22.2		1.13 28.6	.8780 22.301				
PCF 1 3/4	-	-	-	.2500 6.350	1.00 25.4	.7510 19.075	±.001 ±.025	3/4-16	1,250 142	.81 .37
PCFE 1 3/4	.03 .8	.86 21.7	1.000 25.4		1.25 31.8	1.0030 25.476				
PCF 2	-	-	-	.3750 9.525	1.00 25.4	.8760 22.250	±.001 ±.025	7/8-14	1,500 170	1.34 .61
PCFE 2	.03 .8	.98 24.9	1.187 30.1		1.50 38.1	1.1900 30.226				
PCF 2 1/4	-	-	-	.3750 9.525	1.00 25.4	.8760 22.250	±.001 ±.025	7/8-14	1,500 170	1.72 .78
PCFE 2 1/4	.03 .8	.98 24.9	1.187 30.1		1.50 38.1	1.1900 30.226				
PCF 2 1/2	-	-	-	.4375 11.113	1.25 31.8	1.0010 25.425	±.001 ±.025	1-14	2,240 254	2.12 .96
PCFE 2 1/2	.03 .8	.98 24.9	1.187 30.1		1.50 38.1	1.1900 30.226				
PCF 3	-	-	-	.4375 11.113	1.75 44.5	1.2510 31.775	±.001 ±.025	1 1/4-12	3,440 388	3.91 1.77
PCFE 3	.06 1.5	1.23 31.2	1.750 44.5		2.31 58.7	1.7530 44.526				
PCF 3 1/4	-	-	-	.4375 11.113	1.75 44.5	1.2510 31.775	±.001 ±.025	1 1/4-12	3,440 388	4.60 2.08
PCFE 3 1/4	.06 1.5	1.23 31.2	1.750 44.5		2.31 58.7	1.7530 44.526				
PCF 3 1/2	-	-	-	.4375 11.113	1.75 44.5	1.2510 31.775	±.001 ±.025	1 1/4-12	3,440 388	6.25 2.83
PCFE 3 1/2	.06 1.5	1.36 34.4	1.812 46.0		2.31 58.7	1.8150 46.101				
PCF 4	-	-	-	.4375 11.113	1.75 44.5	1.2510 31.775	±.001 ±.025	1 1/4-12	3,440 388	7.94 3.60
PCFE 4	.06 1.5	1.36 34.4	1.812 46.0		2.31 58.7	1.8150 46.101				
PCF 4 1/2	-	-	-	.4375 11.113	1.75 44.5	1.2510 31.775	±.001 ±.025	1 1/4-12	3,440 388	9.88 4.48
PCF 5	-	-	-		3.25 82.6	2.0010 50.825				
PCF 6	-	-	-	.8750 22.225	3.25 82.6	2.5010 63.525	±.001 ±.025	2 1/2-12	5,000 566	30.00 13.61
PCF 7	-	-	-		3.25 82.6	2.5010 63.525				
PCF 8	-	-	-	.8750 22.225	3.25 82.6	2.5010 63.525	±.001 ±.025	2 1/2-12	5,000 566	49.00 22.23

Clamping torque is based on dry threads. If threads are lubricated, use half of value shown.

McGILL® TRAKROL Cam Follower Bearings

Basic Construction Type: Yoke Type Cylindrical Outside Diameter

Rolling Elements: Ball or Tapered Roller Bearing Insert

Bearing Material: Bearing Quality Steel

Seal Type: Rubber Lip

Lubrication: Polyurea Thickened Grease NLGI #2

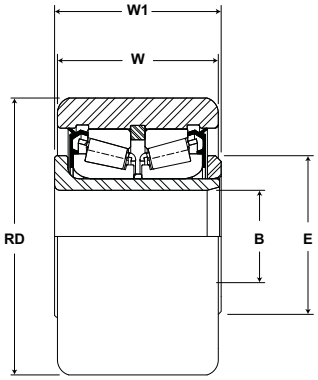

PCYR

Part No.	Insert Type	RD	W	B		W1	E	Track Roller Dynamic Rating	Thrust Capacity	Track Roller Static Rating	WT
With LUBRI-DISC Seals	Ball or Tapered Roller Bearing	Roller Diameter	Roller Width	Bore Diameter		Endplate Extension	Min. Clamping Diameter				Bearing Weight
		inch mm		inch mm		inch mm		lb/N	lb/N	lb/N	lb kg
		(Ref)	(Ref)	Nom.	Tol.	(Ref)	(Ref)				
PCYR 3	TRB	3.00 76.2	1.75 44.5	1.000 25.40	+0.0007 /-0 +0.02 / - 0	1.81 46.0	1.75 44.5	14,300 63,606	5,790 25,754	20,000 88,960	2.57 1.17
PCYR 3 1/2	TRB	3.50 88.9	2.00 50.8	1.125 28.58	+0.0007 /-0 +0.02 / - 0	2.06 52.4	2.00 50.8	14,300 63,606	5,790 25,754	27,200 120,986	4.41 2.00
PCYR 4	TRB	4.00 101.6	2.25 57.2	1.250 31.75	+0.0007 /-0 +0.02 / - 0	2.31 58.7	2.25 57.2	14,300 63,606	5,790 25,754	27,200 120,986	6.57 2.98
PCYR 4 1/2	TRB	4.50 114.3	1.75 44.5	1.000 25.40	+0.0007 /-0 +0.02 / - 0	1.81 46.0	1.75 44.5	14,300 63,606	5,790 25,754	20,000 88,960	9.09 4.12
PCYR 5	TRB	5.00 127.0	3.75 95.3	1.750 44.45	+0.0007 /-0 +0.02 / - 0	2.85 72.3	3.00 76.2	35,800 159,238	13,300 59,158	58,400 259,763	11.61 5.27
PCYR 6	TRB	6.00 152.4	3.25 82.6	2.250 57.15	+0.0007 /-0 +0.02 / - 0	3.38 85.7	3.25 82.6	35,800 159,238	14,200 63,162	58,400 259,763	20.47 9.29

*Dynamic thrust load rating based on application of a centric, axial load. Fatigue life calculations for combined radial and thrust loading require special considerations and Application Engineering should be contacted.

Metric dimensions for reference only.

Not all parts are available from stock. Please contact customer service for availability (800) 626-2120.

For more information on bearing capabilities outside of our standard offering, please contact Application Engineering (800) 626-2093.

Cam Follower Engineering see page B-147.

For more information on bearing capabilities outside of our standard offering, please contact Application Engineering (800) 626-2093.

McGILL® TRAKROL Cam Follower Bearings

Basic Construction Type: Stud Type Flanged Outside Diameter

Rolling Elements: Ball or Tapered Roller Bearing Insert

Bearing Material: Bearing Quality Steel

Seal Type: Metal Extension Plug and Rubber Lip Seal Ball Bearing with Additional NYLAPLATE Seal

Lubrication: Polyurea Thickened Grease NLGI #2

Stem Configuration: Concentric / Eccentric / Heavy Stud

Mounting Feature: Hex Hole on Thread Face

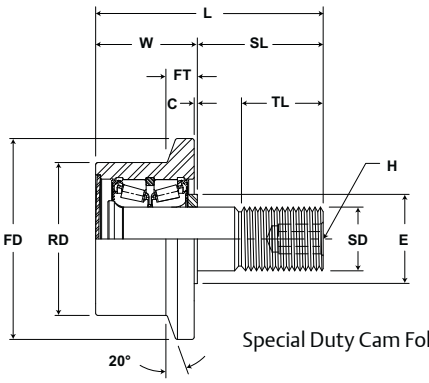

Special Duty Cam Follower

FCF

Part No.	Insert Type	RD	W	FD	FT	SD		SL	C	TL	L	Track Roller Dynamic Rating	Thrust Capacity	Track Roller Static Rating
With LUBRI-DISC Seals	Ball or Tapered Roller Bearing	Roller Diameter	Roller Width	Flange Diameter	Flange Width	Stud Diameter		Stud Length	Endplate Extension	Minimum Thread Length	Length Overall			
		inch mm										lb/N	lb/N	lb/N
		(Ref)	(Ref)	(Ref)	(Ref)	Nom	Tol	(Ref)	(Ref)	(Ref)	(Ref)			
FCF 1 1/2 FCFE 1 1/2	BB	1.50 38.1	1.188 30.16	2.19 55.6	.34 8.7	.625 15.9	+0 / -0.001 +0 / - 0.03	1.50 38.1	.06 1.6	.75 19.1	2.69 68.3	2,520 11,209	1,320 5,871	1,370 6,094
FCF 1 3/4 FCFE 1 3/4	BB	1.75 44.5	1.188 30.16	2.44 61.9	.34 8.7	.750 19.1	+0 / -0.001 +0 / - 0.03	1.75 44.5	.06 1.6	.88 22.2	2.94 74.6	2,520 11,209	1,320 5,871	1,370 6,094
FCF 2 1/2 FCFE 2 1/2	BB	2.50 63.5	1.688 42.86	3.19 81.0	.59 15.1	1.00 25.4	+0 / -0.001 +0 / - 0.03	2.25 57.2	.06 1.6	1.50 38.1	3.94 100.0	5,120 22,774	2,680 11,921	3,120 13,878
FCF 2 3/4 FCFE 2 3/4	BB	2.75 69.9	1.688 42.86	3.44 87.3	.59 15.1	1.00 25.4	+0 / -0.001 +0 / - 0.03	2.25 57.2	.06 1.6	1.50 38.1	3.94 100.0	5,120 22,774	2,680 11,921	3,120 13,878
FCF 3 FCFE 3	TRB	3.00 76.2	2.000 50.80	3.94 100.0	.59 15.1	1.25 31.8	+0 / -0.001 +0 / - 0.03	2.50 63.5	.06 1.6	1.75 44.5	4.50 114.3	14,300 63,606	5,790 25,754	16,000 71,168
FCF 3 1/4 FCFE 3 1/4	TRB	3.25 82.6	2.000 50.80	4.19 106.4	.59 15.1	1.25 31.8	+0 / -0.001 +0 / - 0.03	2.50 63.5	.06 1.6	1.75 44.5	4.50 114.3	14,300 63,606	5,790 25,754	16,000 71,168
FCF 3 1/2 FCFE 3 1/2	TRB	3.50 88.9	2.000 50.80	4.44 112.7	.59 15.1	1.25 31.8	+0 / -0.001 +0 / - 0.03	2.75 69.9	.06 1.6	1.75 44.5	4.75 120.7	14,300 63,606	5,790 25,754	16,000 71,168
FCF 4 FCFE 4	TRB	4.00 101.6	2.000 50.80	4.94 125.4	.59 15.1	1.25 31.8	+0 / -0.001 +0 / - 0.03	2.75 69.9	.06 1.6	1.75 44.5	4.75 120.7	14,300 63,606	5,790 25,754	16,000 71,168
FCF 4 1/2	TRB	4.50 114.3	2.000 50.80	5.44 138.1	.59 15.1	1.25 31.8	+0 / -0.001 +0 / - 0.03	2.75 69.9	.06 1.6	1.75 44.5	4.75 120.7	14,300 63,606	5,790 25,754	16,000 71,168
FCF 5	TRB	5.00 127.0	3.000 76.20	5.94 150.8	.72 18.3	1.25 31.8	+0 / -0.001 +0 / - 0.03	4.50 114.3	.06 1.6	2.50 63.5	7.50 190.5	35,800 159,238	13,300 59,158	40,000 177,920
FCF 6	TRB	6.00 152.4	3.000 76.20	6.94 176.2	.72 18.3	2.50 63.5	+0 / -0.001 +0 / - 0.03	5.50 139.7	.06 1.6	3.25 82.6	8.50 215.9	35,800 159,238	14,200 63,162	62,000 275,776
FCF 7	TRB	7.00 177.8	3.000 76.20	7.94 201.6	.72 18.3	2.50 63.5	+0 / -0.001 +0 / - 0.03	5.50 139.7	.06 1.6	3.25 82.6	8.50 215.9	35,800 159,238	14,200 63,162	62,000 275,776
FCF 8	TRB	8.00 203.2	3.000 76.20	8.94 227.0	.72 18.3	2.50 63.5	+0 / -0.001 +0 / - 0.03	5.50 139.7	.06 1.6	3.25 82.6	8.50 215.9	35,800 159,238	14,200 63,162	62,000 275,776

*Dynamic thrust load rating based on application of a centric, axial load. Fatigue life calculations for combined radial and thrust loading require special considerations and Application Engineering should be contacted.

Metric dimensions for reference only.

Not all parts are available from stock. Please contact customer service for availability (800) 626-2120.

For more information on bearing capabilities outside of our standard offering, please contact Application Engineering (800) 626-2093.

TRAKROL Cam Follower Bearings

McGILL®

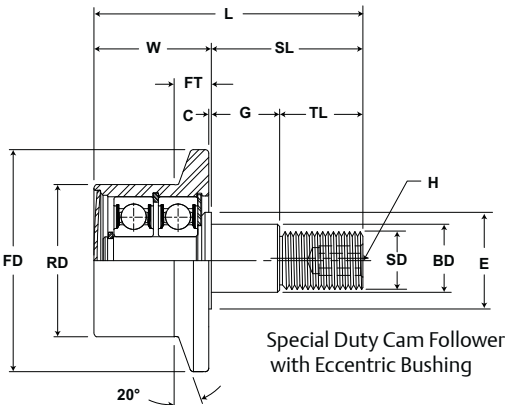

Special Duty Cam Follower with Eccentric Bushing

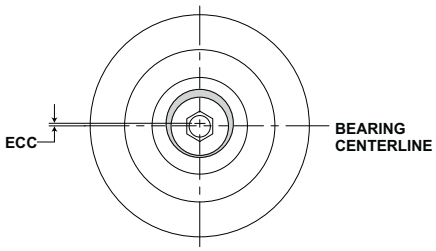

FCF

Part No.	ECC	G	BD	H	E	Housing Bore Diameter		Thread Type	Clamping Torque	WT
With LUBRI-DISC Seals	Eccentric Base Modifier FCFE-XX			Hex Hole	Min. Clamping Diameter					Bearing Weight
	inch mm			inch mm		inch mm				
	(Ref)	+0/-.010	±.001	(Ref)	(Ref)	Nom.	Tol.	(Ref)	in-lb Nm	lb kg
FCF 1 1/2	-	-	-	.25 6.4	.75 19.1	.6260 15.900	±.0002 ±.005	5/8-18	650 74	.63 1.4
FCFE 1 1/2	.03 .8	.730 18.54	.875 22.23			.878 22.30	+.001 +.025			
FCF 1 3/4	-	-	-	.25 6.4	1.00 25.4	.7510 19.075	±.0002 ±.005	3/4-16	1,250 142	1.00 .45
FCFE 1 3/4	.03 .8	0.855 21.72	1.000 25.40			1.003 25.47	+.001 +.025			
FCF 2 1/2	-	-	-	.44 11.1	1.25 31.8	1.0010 25.425	±.0002 ±.005	1-14	2,240 254	2.75 1.25
FCFE 2 1/2	.03 .8	1.105 28.07	1.375 34.93			1.378 35.00	+.001 +.025			
FCF 2 3/4	-	-	-	.44 11.1	1.25 31.8	1.0010 25.425	±.0002 ±.005	1-14	2,240 254	3.25 1.47
FCFE 2 3/4	.03 .8	1.105 28.07	1.375 34.93			1.378 35.00	+.001 +.025			
FCF 3	-	-	-	.44 11.1	1.75 44.5	1.2510 31.775	±.0002 ±.005	1 1/4-12	3,440 388	4.69 2.13
FCFE 3	.06 1.5	1.230 31.24	1.750 44.45			1.753 44.52	+.001 +.025			
FCF 3 1/4	-	-	-	.44 11.1	1.75 44.5	1.2510 31.775	±.0002 ±.005	1 1/4-12	3,440 388	5.42 2.46
FCFE 3 1/4	.06 1.5	1.230 31.24	1.750 44.45			1.753 44.52	+.001 +.025			
FCF 3 1/2	-	-	-	.44 11.1	1.75 44.5	1.2510 31.775	±.0002 ±.005	1 1/4-12	3,440 388	6.25 2.83
FCFE 3 1/2	.06 1.5	1.355 34.42	1.812 46.02			1.815 46.10	+.001 +.025			
FCF 4	-	-	-	.44 11.1	1.75 44.5	1.2510 31.775	±.0002 ±.005	1 1/4-12	3,440 388	7.94 3.60
FCFE 4	.06 1.5	1.355 34.42	1.812 46.02			1.815 46.10	+.001 +.025			
FCF 4 1/2	-	-	-	.44 11.1	1.75 44.5	1.2510 31.775	±.0002 ±.005	1 1/4-12	3,440 388	9.88 4.48
FCF 5	-	-	-	.88 22.2	3.25 82.6	2.0010 50.825	±.0002 ±.005	2-12	5,000 566	18.50 8.39
FCF 6	-	-	-	.88 22.2	3.25 82.6	2.5010 63.525	±.0002 ±.005	2 1/2-12	5,000 566	30.00 13.61
FCF 7	-	-	-	.88 22.2	3.25 82.6	2.5010 63.525	±.0002 ±.005	2 1/2-12	5,000 566	38.00 17.24
FCF 8	-	-	-	.88 22.2	3.25 82.6	2.5010 63.525	±.0002 ±.005	2 1/2-12	5,000 566	49.00 22.23

Clamping torque is based on dry threads. If threads are lubricated, use half of value shown.

McGILL® TRAKROL Cam Follower Bearings

Basic Construction Type: Yoke Type Flanged Outside Diameter

Rolling Elements: Tapered Roller Bearing Insert

Bearing Material: Bearing Quality Steel

Seal Type: Rubber Lip Seal

Lubrication: Polyurea Thickened Grease NLGI #2

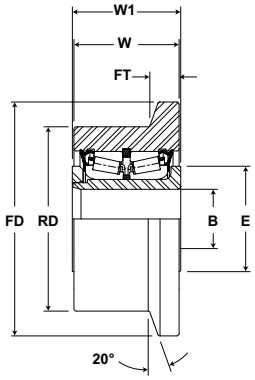

FCYR

Part No.	Insert Type	RD	W	FD	FT	B		W1	E	Track Roller Dynamic Rating	Thrust Capacity	Track Roller Static Rating	WT
With LUBRI-DISC Seals	Ball or Tapered Roller Bearing	Roller Diameter	Roller Width	Flange Diameter	Flange Width	Bore Diameter		Endplate Extension	Min. Clamping Diameter				Bearing Weight
		inch mm		inch mm		inch mm		inch mm		lb/N	lb/N	lb/N	lb kg
		(Ref)	(Ref)	(Ref)	(Ref)	Nom.	Tol.	(Ref)	(Ref)				
FCYR 3	TRB	3.00 76.2	1.75 44.5	3.94 100.0	.59 15.1	1.000 25.40	+0.0007 /-0 +0.02 / - 0	1.81 46.0	1.75 44.5	14,300 63,606	5,790 25,754	20,000 88,960	3.28 1.49
FCYR 3 1/4	TRB	3.25 82.6	1.75 44.5	4.19 106.4	.59 15.1	1.000 25.40	+0.0007 /-0 +0.02 / - 0	1.81 46.0	1.75 44.5	14,300 63,606	5,790 25,754	20,000 88,960	3.93 1.78
FCYR 3 1/2	TRB	3.50 88.9	2.00 50.8	4.44 112.7	.59 15.1	1.125 28.58	+0.0007 /-0 +0.02 / - 0	2.06 52.4	2.00 50.8	14,300 63,606	5,790 25,754	27,200 120,986	4.97 2.25
FCYR 4	TRB	4.00 101.6	2.25 57.2	4.94 125.4	.59 15.1	1.250 31.75	+0.0007 /-0 +0.02 / - 0	2.31 58.7	2.25 57.2	14,300 63,606	5,790 25,754	27,200 120,986	7.39 3.35
FCYR 4 1/2	TRB	4.50 114.3	1.75 44.5	5.44 138.1	.59 15.1	1.000 25.40	+0.0007 /-0 +0.02 / - 0	1.81 46.0	1.75 44.5	14,300 63,606	5,790 25,754	20,000 88,960	10.19 4.62
FCYR 5	TRB	5.00 127.0	3.75 95.3	5.94 150.8	.72 18.3	1.750 44.45	+0.0007 /-0 +0.02 / - 0	2.85 72.3	3.00 76.2	35,800 159,238	13,300 59,158	58,400 259,763	12.99 5.89
FCYR 6	TRB	6.00 152.4	3.25 82.6	6.94 176.2	.72 18.3	2.250 57.15	+0.0007 /-0 +0.02 / - 0	3.38 85.7	3.25 82.6	35,800 159,238	14,200 63,162	58,400 259,763	20.04 9.09

*Dynamic thrust load rating based on application of a centric, axial load. Fatigue life calculations for combined radial and thrust loading require special considerations and Application Engineering should be contacted.

Metric dimensions for reference only.

Not all parts are available from stock. Please contact customer service for availability (800) 626-2120.

For more information on bearing capabilities outside of our standard offering, please contact Application Engineering (800) 626-2093.

Cam Follower Engineering see page B-147.

For more information on bearing capabilities outside of our standard offering, please contact Application Engineering (800) 626-2093.

McGILL® TRAKROL Cam Follower Bearings

Basic Construction Type: Stud Type V-Grooved Outside Diameter

Rolling Elements: Ball or Tapered Roller Bearing Insert

Bearing Material: Bearing Quality Steel

Seal Type: Metal Extension Plug and Rubber Lip Seal Ball

Lubrication: Polyurea Thickened Grease NLGI #2

Stem Configuration: Concentric / Eccentric

Mounting Feature: Hex Hole on Thread Face

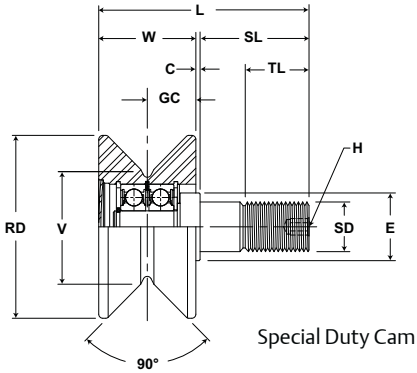

Special Duty Cam Follower

VCF

Part No.	Insert Type	RD	W	V	GC	SD		SL	C	L		ECC	G	BD
With LUBRI-DISC Seals	Ball or Tapered Roller Bearing	Roller Diameter	Roller Width	Point Diameter	Groove Center	Stud Diameter		Stud Length	Endplate Extension	Length Overall	Thread Length	Eccentric Base Modifier VCFE-XX		
		inch mm		inch mm		inch mm		inch mm		inch mm		inch mm		
		(Ref)	(Ref)	(Ref)	(Ref)	Nom.	Tol.	(Ref)	(Ref)	(Ref)	(Ref)	(Ref)	+0/-.010	±.001
VCF 2 1/2	BB	2.50 63.5	1.31 33.3	1.50 38.1	.69 17.5	1.00 25.4	+0/-0.001 +0/- 0.03	1.75 44	0.06 2	2.94 75	0.88 22	-	-	-
VCFE 2 1/2												.03 1	.86 22	1.00 25
VCF 3 1/2	BB	3.50 88.9	1.69 42.9	2.25 57.2	.88 22.2	1.25 31.8	+0/-0.001 +0/- 0.03	2.00 51	0.06 2	3.69 94	1.13 29	-	-	-
VCFE 3 1/2												.03 1	.98 25	1.19 30
VCF 4 1/2	TRB	4.50 114.3	2.00 50.8	3.00 76.2	1.00 25.4	1.25 31.8	+0/-0.001 +0/- 0.03	2.50 64	0.06 2	4.50 114	1.75 44	-	-	-
VCFE 4 1/2												.06 2	1.23 31	1.75 44
VCF 5 1/2	TRB	5.50 139.7	2.00 50.8	4.00 101.6	1.00 25.4	1.25 31.8	+0/-0.001 +0/- 0.03	2.75 70	0.06 2	4.75 121	1.75 44	-	-	-
VCFE 5 1/2												.06 2	1.36 34	1.81 46
VCF 6 1/2	TRB	6.50 165.1	3.00 76.2	5.00 127.0	1.50 38.1	2.00 50.8	+0/-0.001 +0/- 0.03	4.50 114	0.06 2	7.50 191	2.50 64	-	-	-
VCF 7 1/2	TRB	7.50 190.5	3.00 76.2	6.00 152.4	1.50 38.1	2.50 63.5	+0/-0.001 +0/- 0.03	5.50 140	0.06 2	8.50 216	3.25 83	-	-	-
VCF 8 1/2	TRB	8.50 215.9	3.00 76.2	7.00 177.8	1.50 38.1	2.50 63.5	+0/-0.001 +0/- 0.03	5.50 140	0.06 2	8.50 216	3.25 83	-	-	-

*Dynamic thrust load rating based on application of a centric, axial load. Fatigue life calculations for combined radial and thrust loading require special considerations and Application Engineering should be contacted.

Metric dimensions for reference only.

Not all parts are available from stock. Please contact customer service for availability (800) 626-2120.

For more information on bearing capabilities outside of our standard offering, please contact Application Engineering (800) 626-2093.

TRAKROL Cam Follower Bearings

McGILL®

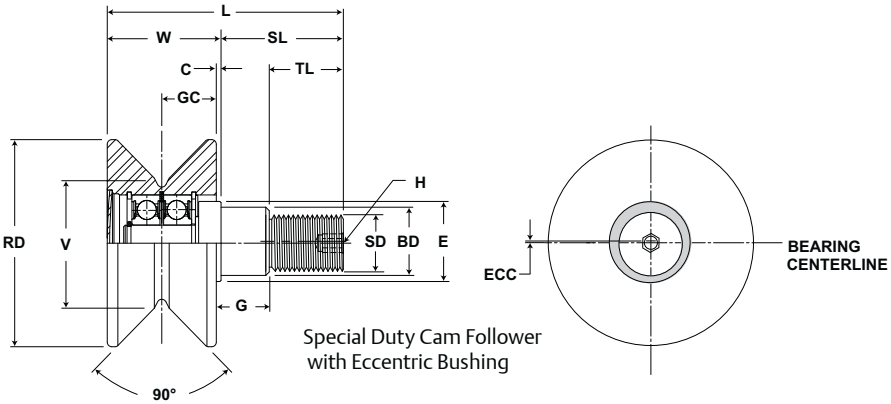

Special Duty Cam Follower with Eccentric Bushing

VCF

Track Roller Dynamic Rating	Thrust Capacity	Track Roller Static Rating	H Hex Hole	E Min. Clamping Diameter	Housing Bore Diameter		Thread Type	Clamping Torque	WT Bearing Weight
lb/N	lb/N	lb/N	inch mm (Ref)	inch mm (Ref)	inch mm Nom.	Tol.		in-lb Nm	lb kg
2,520 11,209	1,320 5,871	1,370 6,094	.25 6	1.0 25	.7510 19	+.0002/-.0003 +.0005/-.0008	3/4-16	1,250 142	1.3 .59
					1.003 25.47	±.001 ±.025			
3,490 15,524	1,830 8,140	2,000 8,896	.38 10	1.0 25	.8760 22	+.0002/-.0003 +.0005/-.0010	7/8-14	1,500 170	3.2 1.45
					1.190 30.23	±.001 ±.025			
14,300 63,606	5,790 25,754	16,000 71,168	.44 11	1.75 44	1.2510 32	+.0002/-.0003 +.0005/-.0013	1 1/4-12	3,440 388	6.8 3.08
					1.753 44.52	±.001 ±.025			
14,300 63,606	5,790 25,754	16,000 71,168	.44 11	1.75 44	1.2510 32	+.0002/-.0003 +.0005/-.0015	1 1/4-12	3,440 388	10.7 4.85
					1.815 46.10	±.001 ±.025			
35,800 159,238	13,300 59,158	40,000 177,920	.88 22	3.25 83	2.0010 51	+.0002/-.0003 +.0005/-.0017	2-12	5,000 566	26.1 11.84
35,800 159,238	14,200 63,162	62,000 275,776	.88 22	3.25 83	2.5010 64	+.0002/-.0003 +.0005/-.0018	2 1/2-12	5,000 566	34.0 15.42
35,800 159,238	14,200 63,162	62,000 275,776	.88 22	3.25 83	2.5010 64	+.0002/-.0003 +.0005/-.0019	2 1/2-12	5,000 566	45.0 20.41

Clamping torque is based on dry threads. If threads are lubricated, use half of value shown.

McGILL® TRAKROL Cam Follower Bearings

Basic Construction Type: Yoke Type V-Grooved Outside Diameter

Rolling Elements: Tapered Roller Bearing Insert

Bearing Material: Bearing Quality Steel

Seal Type: Rubber Lip Seal

Lubrication: Polyurea Thickened Grease NLGI #2

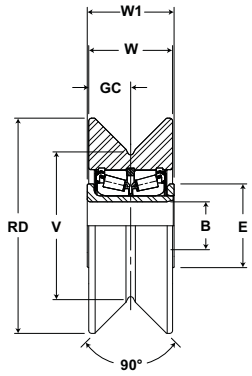

VCYR

Part No.	Insert Type	RD	W	V	GC	B		W1	E	Track Roller Dynamic Rating	Thrust Capacity	Track Roller Static Rating	WT
With LUBRI-DISC Seals	Ball or Tapered Roller Bearing	Roller Diameter	Roller Width	Point Diameter	Groove Center	Bore Diameter		Endplate Extension	Min. Clamping Diameter				Bearing Weight
		inch mm		inch mm		inch mm		inch mm		lb/N	lb/N	lb/N	lb kg
		(Ref)	(Ref)	(Ref)	(Ref)	Nom	Tol	(Ref)	(Ref)				
VCYR 4 1/2	TRB	4.50 114	1.75 44	3.00 76	1.00 25	1.0000 25.40	+0.0007/-0 +0.02/- 0	1.81 46	1.75 44	14,300 63,606	5,790 25,754	20,000 88,960	4.98 2.26
VCYR 5 1/2	TRB	5.50 140	2.25 57	4.00 102	1.00 25	1.2500 31.75	+0.0007/-0 +0.02/- 0	2.31 59	2.25 57	14,300 63,606	5,790 25,754	27,100 120,541	11.11 5.03
VCYR 6 1/2	TRB	6.50 165	2.75 70	5.00 127	1.50 38	1.7500 44.45	+0.0007/-0 +0.02/- 0	2.88 73	3.00 76	35,800 159,238	13,300 59,158	56,200 249,978	24.72 11.21

*Dynamic thrust load rating based on application of a centric, axial load. Fatigue life calculations for combined radial and thrust loading require special considerations and Application Engineering should be contacted.

Metric dimensions for reference only.

Not all parts are available from stock. Please contact customer service for availability (800) 626-2120.

For more information on bearing capabilities outside of our standard offering, please contact Application Engineering (800) 626-2093.

Cam Follower Engineering see page B-147.

For more information on bearing capabilities outside of our standard offering, please contact Application Engineering (800) 626-2093.

Load Ratings and Life

Life Calculations

The L10 (rating) life for any given application and bearing selection can be calculated in terms of millions of revolutions by using the bearing Basic Dynamic Rating and applied radial load (or, equivalent radial load in the case of radial bearing applications having combined radial and thrust loads). The L10 life for any given application can be calculated in terms of hours, using the bearing Basic Dynamic Rating, applied load (or equivalent radial load) and suitable speed factors, by the following equation:

$$L_{10} = \left(\frac{C}{P}\right) \times \frac{1{,}000{,}000}{60 \times n} = \left(\frac{C}{P}\right)^{10/3} \times \frac{16667}{n}$$

Where:

L_{10} = The # of hours that 90% of identical bearings under ideal conditions will operate at a specific speed and condition before fatigue is expected to occur.

C = Basic Dynamic Rating (lbs) 1,000,000 Revolutions

P = Constant Equivalent Radial Load (lbs)

n = Speed (RPM)

Additionally, the ABMA provides application factors for all types of bearings which need to be considered to determine an adjusted Rated Life (Lna). L10 life rating is based on laboratory conditions yet other factors are encountered in actual bearing application that will reduce bearing life. Lna life rating takes into account reliability factors, material type, and operating conditions.

$$L_{na} = a_1 \times a_2 \times a_3 \times L_{10}$$

Where:

L_{na} = Adjusted Rated Life.

a_1 = Reliability Factor. Adjustment factor applied where estimated fatigue life is based on reliability other than 90% (See Table No 1).

Table No. 1 Life Adjustment Factor for Reliability

Reliability %	L_{na}	a_1
90	L10	1
95	L5	0.62
96	L4	0.53
97	L3	0.44
98	L2	0.33
99	L1	0.21
50	L50	5

a_2 =Material Factor. Life adjustment for bearing race material. Power Transmission Solutions bearing races are manufactured from bearing quality steel. Therefore the a_2 factor is 1.0.

a_3 = Life Adjustment Factor for Operating Conditions. This factor should take into account the adequacy of lubricant, presence of foreign matter, conditions causing changes in material properties, and unusual loading or mounting conditions. Assuming a properly selected and mounted bearing having adequate seals and lubricant, the a3 factor should be 1.0.

Load Ratings and Life Continued

Vibration and shock loading can act as an additional loading to the steady expected applied load. When shock or vibration is present, an a3 Life Adjustment Factor can be applied. Shock loading has many variables which often are not easily determined. Typically, it is best to rely on one's experience with the particular application. Consult Application Engineering for assistance with applications involving shock or vibration loading.

The a3 factor takes into account a wide range of application and mounting conditions as well as bearing features and design. Accurate determination of this factor is normally achieved through testing and in-field experience. Power Transmission Solutions offers a wide range of options which can maximize bearing performance. Consult Application Engineering for more information.

Variable Load Formula

Root mean load (RML) is to be used when a number of varying loads are applied to a bearing for varying time limits. Maximum loading still must be considered for bearing size selection.

$$\text{RML}^* = \sqrt[10/3]{\frac{(L_1^{10/3}N_1)+(L_2^{10/3}N_2)+(L_3^{10/3}N_3)}{100}}$$

Where:
RML = Root Mean Load (lbs.)
L_1, L_2, etc. = Load in pounds
N_1, N_2, etc. = Percent of total time operated at loads L_1, L_2, etc.

* Apply RML to rating at mean speed to determine resultant life.

Mean Speed Formula

The following formula is to be used when operating speed varies over time.

$$\text{Mean Speed} = \frac{S_1N_1+S_2N_2+S_3N_3}{100}$$

S_1S_2, etc = Speeds in RPM
N_1N_2, etc = Percentage of total time operated at speeds S_1S_2, etc

Load Ratings and Life Continued

Bearing Life In Oscillating Applications

The equivalent rotative speed (ERS) is used in life calculations when the bearing does not make complete revolutions during operation. The ERS is then used as the bearing operating speed in the calculation of the L10 (Rating) Life. The formula is based on sufficient angular rotation to have roller paths overlap.

ERS = Equivalent Rotative Speed

N = Total number of degrees per minute through which the bearing will rotate.

$$ERS = \frac{N}{360}$$

In the above formula, allowance is made for the total number of stress applications on the weakest race per unit time, which, in turn, determines fatigue life and the speed factors. The theory behind fretting corrosion is best explained by the fact that the rolling elements in small angles of oscillation retrace a path over an unchanging area of the inner or outer races where the lubricant is prevented by inertia from flowing in behind the roller as the bearing oscillates in one direction. Upon reversal, this small area of rolling contact is traversed by the same roller in the dry state. The friction of the two unlubricated surfaces causes fretting corrosion and produces failures which are unpredictable from a normal life standpoint.

With a given bearing selected for an oscillating application, the best lubrication means is a light mineral oil under positive flow conditions. With a light oil, there is a tendency for all areas in the bearing load zone to be immersed in lubricant at all times. The full flow lubrication dictates that any oxidized material which may form is immediately carried away by the lubricant, and since these oxides are abrasive, further wear tends to be avoided. If grease lubrication must be used, it is best to consult with either the bearing manufacturer or the lubricant manufacturer to determine the best possible type of lubricant. Greases have been compounded to resist the detrimental effect of fretting corrosion for such applications.

Static Load Rating

The “static load rating” for rolling element bearings is that uniformly distributed static radial load acting on a non-rotating bearing, which produces a contact stress of 580,000 psi (roller bearings) or 607,000 psi (ball bearings) at the center of the most heavily loaded rolling element. At this stress level, plastic deformation begins to be significant. Experience has shown that the plastic deformation at this stress level can be tolerated in most bearing applications without impairment of subsequent bearing operation. In certain applications where subsequent rotation of the bearing is slow and where smoothness and friction requirements are not too exacting, a higher static load limit can be tolerated. Where extreme smoothness is required or friction requirements are critical, a lower static load limit may be necessary.

Minimum Bearing Load

Skidding, or sliding, of the rolling elements on the raceway instead of a true rolling motion can cause excessive wear. Applications with high speeds and light loading are particularly prone to skidding. As a general guideline, rolling element bearings should be radially loaded at least 2% of Basic Dynamic Rating. For applications where load is light relative to the bearings dynamic load rating, consult Application Engineering for assistance.

Load Ratings and Life Continued

Bushing Type Cam Follower/ Yoke Roller

Because bushing type bearings operate with sliding motion instead of rolling motion, they do not follow standard bearing life theory. Instead, life is based on an acceptable wear rate based on operating load and speed for the given bearing size. The following chart and examples are provided to aid in selection of bushing type cam followers

To determine maximum bearing capacity at a given speed, read vertical load scale under basic bearing size under consideration at proper speed.

Example:

Determine load capacity of BCF-3/4-S at 100 RPM. Read down vertical load scale under basic 3/4 size to intersection of horizontal line for maximum speed of 100 RPM. Load rating would be 100 pounds.

To determine minimum bearing size required for application, draw horizontal line through application speed until application load can be read on one of the vertical load scales. The basic bearing size can then be read at the top of the column.

Example:

Application speed = 200 RPM
Application load = 50 pounds

Minimum basic bearing size required would be a BCF or BCYR - 11/4-S.

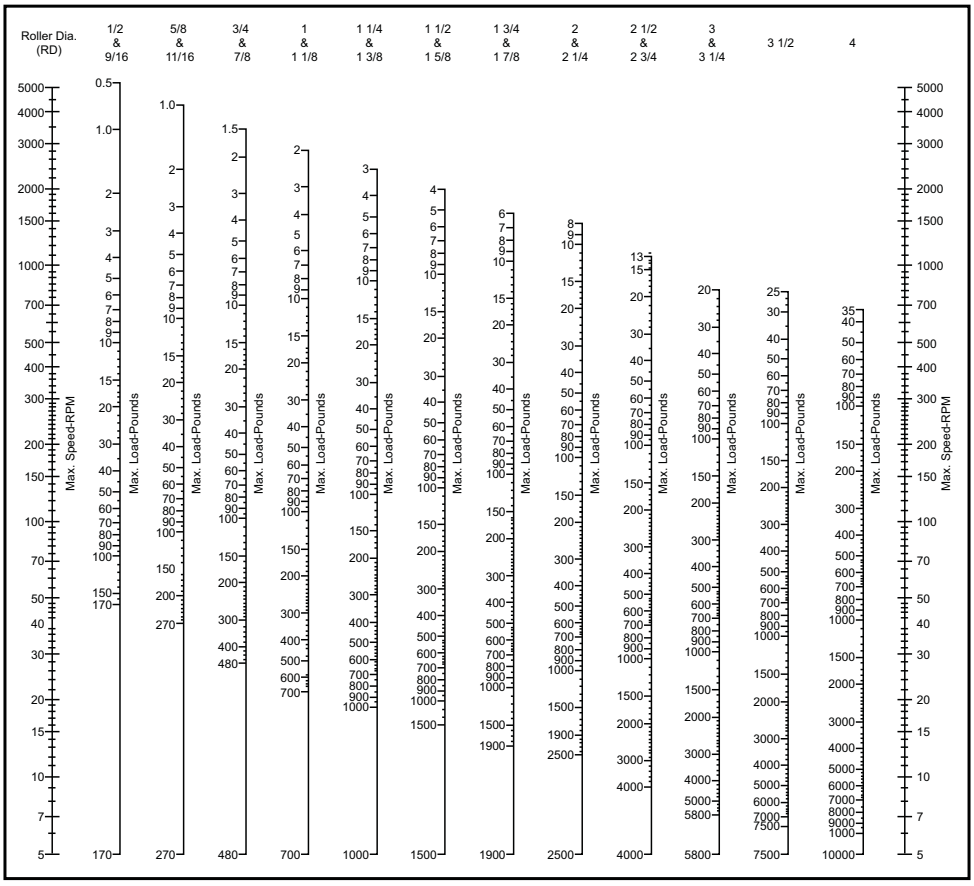

Values based on continuous rotation and no lubrication

Cam Follower Engineering Section

Load Ratings

ABMA and ISO Dynamic and Static Load Ratings, when listed, follow standard calculations as accepted by ABMA and ISO. These ratings are based on a bearing that is fully supported within a rigid housing. Cam follower and track roller bearings generally operate with an unsupported outer ring in rolling contact with a cam or track. As such, these standard ratings cannot be applied. ABMA and ISO dynamic and static load ratings when listed in the dimension tables for cam follower and track roller bearings are therefore provided for comparison only.

When listed, Track Roller Dynamic Load Rating is to be used for the purpose of bearing size selection or theoretical bearing life calculation. The track roller rating considers the unsupported outer ring condition of the cam follower or track roller bearing design. The Maximum Permissible Load as listed considers stud strength. Static loads should not exceed the Maximum Permissible Load.

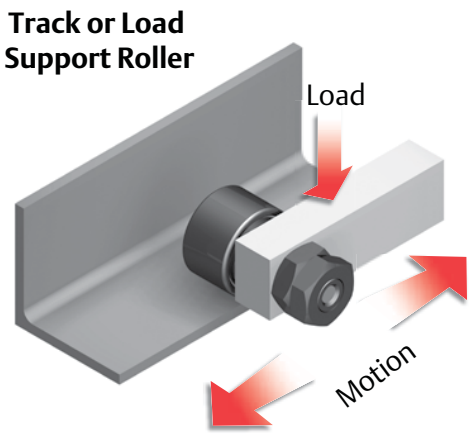

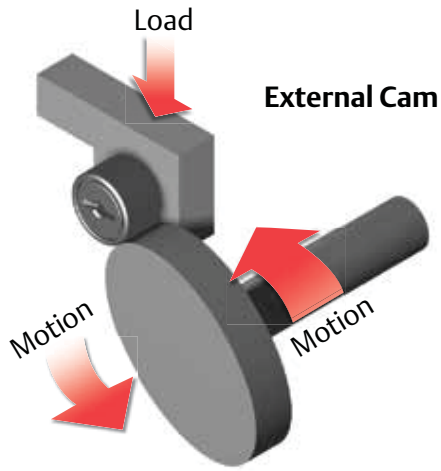

Track Roller Static Load Rating as listed considers internal rolling element contact stress. Static loads greater than the Static Rating may impair subsequent dynamic operations.

Load Considerations

In any bearing application, radial, shock and thrust loads must be taken into consideration to help assure successful performance.

Radial Load

Maximum dynamic radial load should not exceed 50% of Basic Dynamic Rating. If radial load and/or root mean load exceed 50% of Basic Dynamic Rating, life calculations must be reviewed by Application Engineering. If dynamic radial loads exceed 25% of Basic Dynamic Rating, consideration should be given to use of heavy stud option (CFH series) or yoke type (CYR, CYR-CR, CYRD, MCYR, MCYRD series). Applications involving reversing radial loads should be reviewed by Application Engineering.

Cam Follower Engineering Section continued

Shock Load

The load ratings in this catalog are based on uniform and steady loading. When the loading is of a shock nature and/or vibration is present, or the loading is indeterminate, a bearing of greater rating must be selected. If such conditions exist, it is advisable to use the Load Factor as shown in the table below. The actual bearing load should be multiplied by the appropriate load factor and the resultant value used to calculate the bearing life or to determine the required Basic Dynamic Rating as described in the General Engineering Section.

Type of Load	Load Factor
Uniform and Constant	1.0
Light Shock	1.5
Moderate Shock	2.0
Heavy Shock	3.0

Thrust Load Series CF, CFH, CYR, BCF, BCYR, CF-CR, CYR-CR, SDCF, SDMCF, MCF, MCYR

Designed for radial loads, these series' bearings do not have design features that help them to support thrust loading. Therefore, these cam followers and track rollers should be mounted to minimize, or preferably eliminate, the possibility of any thrust loading on the outer ring.

Series CFD, CYRD, MCFD, MCYRD

These series provide improved thrust capability versus the above needle rolling element and bushing type designs. They are designed using a double row of full complement cylindrical rolling elements. Their construction helps to support incidental thrust sometimes associated with cam follower and track roller applications.

Series PCF, FCF, VCF, PCYR, FCYR, VCYR

These series use radial ball and tapered roller bearing assemblies. These constructions make possible successful bearing operation with various combinations of radial and thrust loads. Refer to dimension tables for specific thrust load ratings.

Track Design

Since either cam followers or cam yoke rollers are merely one component of a two-piece bearing construction involving (1) the cam follower or cam yoke roller and (2) the track or cam on which it operates, some consideration must be given to selection of track or cam materials, since they must be considered bearing components and have a direct effect upon ultimate life and performance of the cam roll application. From the standpoint of track design where bearings are used as support or guide rollers, it is often difficult to obtain high hardness and tensile strength values for the machine members against which the bearings operate. In most applications, in the interest of economy, relatively soft structural materials can be applied. Where dimensional accuracy is not extremely critical, the work hardening of ferrous, low carbon track materials, accompanied by relatively small amounts of wear-in of the bearing into the track surface generally results in satisfactory bearing performance. It is common, for instance, in the application of cam follower or cam yoke roller bearings as lift truck mast rollers to employ formed structural steel sections as bearing track support members. The wearing-in and work hardening of the track surface generally results in a satisfactory bearing application, providing loads are not excessive.

Cam Follower Engineering Section continued

Track Capacity

Track capacity of all cam followers and cam yoke roller bearings is the load which a steel track of a given tensile strength will withstand without plastic deformation or brinelling of the track surface. The following tables list track capacities and track capacity factors for steel tracks, as applied to all cam follower and cam yoke roller bearings except crowned O.D. versions. For the crowned O.D. versions, multiply by 0.8 to obtain the track capacity ratings.

To obtain track capacities for a track hardness other than 40 Rockwell "C" scale (180,000 psi or 1242 Mpa tensile strength), multiply the track capacity by the track capacity factor in Table 1. Regardless of the resulting track capacity, dynamic load should not exceed 50% of the dynamic rating as a track roller and static load should not exceed the static rating as a track roller for that bearing.

Table 1 - Track Capacity Factor

Track Tensile Strength, psi	Track Tensile Strength, MPa	Track Hardness Rockwell "C"	Track Capacity Factor
60,000		69	0.111
80,000		85	0.198
100,000		95	0.309
120,000	828	26	0.445
140,000	966	32	0.607
160,000	1104	36	0.792
180,000	1242	40	1.000
200,000	1380	44	1.237
220,000	1518	47	1.495
240,000	1656	50	1.775
260,000	1794	53	2.090
280,000	1932	56	2.420
300,000	2070	58	2.780

Table 2 - Track Capacity, Inch Series Bearings

Basic Bearing Number	Track Capacity Lbs.	Basic Bearing Number	Track Capacity Lbs.
1/2-N	485	1 7/8	5,415
1/2	530	2	7,350
5/9	595	2 1/4	8,260
5/8-N	725	2 1/2	11,100
5/8	785	2 3/4	12,250
2/3	865	3	15,050
3/4	1,085	3 1/4	16,300
7/8	1,260	3 1/2	20,200
1	1,835	4	26,200
1 1/8	2,060	5	38,600
1 1/4	2,660	6	55,600
1 3/8	2,920	7	75,600
1 1/2	3,760	8	94,000
1 5/8	4,065	9	118,000
1 3/4	5,060	10	145,000

Table 3 - Track Capacity, Metric Series Bearings

Basic Bearing Number	Track Capacity Newtons	Basic Bearing Number	Track Capacity Newtons
M CFR-13-X	2390	M CFR-52-X	24000
M CFR-16-X	3675	M CYRR-25-X	24000
M CYRR-5-X	3675	M CFD-52-X	24000
M CFR-19-X	4360	M CYRD-25-X	24000
M CYRR-16	4360	M CFR-62-X	35500
M CFR-22-X	5340	M CYRR-30-X	34250
M CYRR-8-X	6875	M CFD-62-X	35500
M CFR-26-X	6310	M CYRD-30-X	34250
M CFR-30-X	7940	M CFR-72-X	39750
M CYRR-10-X	7940	M CYRR-35-X	38125
M CFR-32-X	8475	M CFD-72-X	39750
M CYRR-12-X	8475	M CYRD-35-X	38125
M CFR-35-X	12300	M CFR-80-X	54750
M CYRR-15-X	12300	M CYRR-40-X	45875
M CFD-35-X	12300	M CFD-80-X	54750
M CYRD-15-X	12300	M CYRD-40-X	45875
M CFR-40-X	15000	M CFR-85-X	58000
M CYRR-17-X	15000	M CYRR-45-X	48750
M CFD-40-X	15000	M CYRD-45-X	48750
M CYRD-17-X	15000	M CFR-90-X	61500
M CFR-47-X	21750	M CYRR-50-X	51625
M CYRR-20-X	21750	M CFD-90-X	61500
M CFD-47-X	21750	M CYRD-50-X	51625
M CYRD-20-X	21750		

Cam Follower Engineering Section continued

Cam Design

Most cam applications are similar in many respects to the track or support roller applications; however, usually bearing speeds are higher due to the multiplication of cam revolutions per minute by the ratio of the cam O.D. to the cam follower O.D. For cam applications, oil lubrication is preferred due to the tendency towards higher speeds noted above. Where such lubrication methods are not possible, frequent replacement of grease should be followed.

In the application of box or drum cams, it is possible to obtain differential rotation of the cam follower outer race as well as associated load reversals. Unless proper cam hardness and materials are employed as well as ample lubrication, excessive cam or cam follower wear may result. In box cams of this nature, the cam rise and cam fall should be watched closely, since the load reversal encountered can cause shock loads in excess of the capacity of the stud or the bearing.
The above precaution would also apply to ordinary circular cams, and instantaneous loads due to rapid cam rise should be carefully calculated and kept below the maximum recommended load or static capacity as listed for the bearing.

In ordinary cam design it is possible to employ the most efficient materials for best resistance to fatigue and brinelling. Attainment of high track surface hardnesses associated with good wear resistance are quite feasible. The same general precautions with regard to tensile strength versus hardness, as listed under track design above, should be followed for cam design; and applications involving high marginal bearing or cam loading should be referred to Application Engineering for review.

Cam Follower and Track Roller Bearing Lubrication

Standard series cam followers and track rollers as listed are factory filled with an NLGI 2 grease suitable for operating temperatures of -20°F to +250°F. Consult Application Engineering regarding grease compatibility issues.

Series	Type
CF, CFH, CYR, CFD, CYRD, MCF, MCYR, MCFD, MCYRD,	Lithium Soap
SDCF, SDMCF	Lithium Complex Soap
PCF, PCYR, FCF, FCYR, VCF, VCYR (Ball Bearing)	Lithium Soap
PCF, PCYR, FCF, FCYR, VCF, VCYR (Tapered Roller Bearing)	Polyurea
BCF, BCYR	Not grease lubricated, coated with preservative oil.
CF-CR, CYR-CR	Aluminum Complex Soap USDA H-1 Authorized*

*Authorized by USDA for use in federally inspected meat and poultry plants. USDA H-1 authorized lubricants may be used on equipment as a lubricant or anti-rust film in locations in which there is exposure of the lubricated part to the edible product.

Frequency of lubrication depends primarily upon the speed of rotation of the bearing, the type of lubrication employed and the amount of contamination present in the application. It is possible to achieve extended operating life without lubrication where speeds are low and contamination is not excessive. This is primarily true in track support applications where bearing rotation is intermittent.

For continuously rotating applications, it is necessary to either provide continuous oil lubrication or else frequent grease lubrication, depending upon the severity of service. Automatic lubrication devices are ideal for intermittent lubrication, since accurate metering of grease and consistent relubrication is maintained through the use of these devices. In applications involving paper dust and other similar abrasive contaminants, relubrication must be resorted to at more frequent intervals and Application Engineering should be consulted for these critical applications.
In LUBRI-DISC® sealed cam followers and track rollers, small vents or reliefs are provided in each seal to enable relubrication of the bearing. To avoid loss of seal efficiency, these seal vents are kept as small as possible, and for this reason the rate of relubrication should be kept at lower levels to avoid seal displacement.

Cam Follower Engineering Section continued

Reduced Maintenance Cam Followers and Track Rollers

Series CFD, CYRD, SDCF, SDMCF, PCF, FCF, VCF cam followers and track rollers are designed for use without relubrication and are not provided as standard with provisions for relubrication. These types of bearings may be limited by the life of the original grease fill and the ability of the seals to protect the bearing from contamination.

Lubrication of Stud-Type Cam Followers and Track Rollers

Series CF, CFH, CF-CR, MCF and MCFD cam followers and track rollers with integral studs are supplied with potential for 3 alternate means of lubrication; namely, through either end of the stud with an appropriate grease fitting or through the radial hole in the stem of the stud.

- The four smallest sizes in inch series CF, CFH, CF-CR (1/2, 9/16, 5/8 and 11/16) and the three smallest sizes in metric series MCF (13, 16 and 19) are an exception to the above information, since they contain neither the radial oil hole in the stem nor the axial hole at the threaded end of the stud. Therefore, these bearings may only be lubricated from the flange end of the stud in the screwdriver slot type only.
- The radial oil hole is not present in metric series MCF sizes through 26 mm OD.
- Bearings utilizing the hex hole feature, unless noted otherwise on the dimension tables, do not have the axial lubrication hole present at that end.
  Since in most cam followers two axial lubrication holes are provided, it is necessary to plug one or both of the holes, depending upon the type of relubrication means employed. For this purpose, oil hole plugs are provided in the bearing wrapping and may be press fitted in the reamed lubrication fitting hole. They are designed to withstand normal relubrication pressures. If the stem radial oil hole is present but not used for relubrication, it should be covered by the housing; therefore, no plug is supplied for this hole.

Grease Lubrication Fittings

Series CF, CFH, CF-CR

Basic Bearing No. Bearing Size	Drive Fitting Size	Ref. Alemite No.	Fitting Included
1 /2 to 11/16 incl.	1/8”	3019	No
3 /4 to 2 3/4 incl.	3/16”	1728-B	No
3 to 4 incl.	1/4”	1743-B	Yes*
5 to 10 incl.	1/4” NPT	1627-B	No
* For hex hole option only.			

Series MCF, MCFD

Basic Bearing No. Bearing Size	Drive Fitting Size	Fitting Included mm
13	3.1	Yes
16 to 26 incl.	4	Yes
30 to 40 incl.	6	Yes
47 to 90 incl.	8	Yes

Lubrication of Yoke-Type Cam Followers and Track Rollers

The relubrication of yoke-type cam follower and track roller bearings is straight forward and is accomplished by means of a radial oil hole and annular lubrication groove found on the inner race of the bearing series. The mounting pin for this bearing series must be drilled axially and radially to properly line up with the groove and hole of the CYR bearing inner race to effect proper lubrication.

Cam Follower Engineering Section continued

Mounting Details - Stud Type Cam Followers and Track Rollers Series CF, CFH, BCF, CF-CR, CFD, MCF, MCFD

Proper mounting of stud type cam follower and track roller bearings require a close fit between the bearing stud and the housing hole. The endplate must be backed up by the housing member face. Likewise the face of the housing adjacent to the bearing endplate face should be square to the housing bore. The following are some general guidelines and details to bear in mind when installing the above series' bearings.

1. Inspect housing.

- Clean, remove burrs and sharp edges.
- Check housing bore diameter. The stud diameter should have a tight fit in the housing bore. Refer to the recommended housing bore diameters given in the dimensional tables.

2. Press stud into housing.

- For best bearing performance, bearing should be mounted with raceway radial lubrication hole in the unloaded portion of the raceway. Raceway radial hole is oriented in line with stem radial hole.
- Direct pressure against solid end of stud, not against the flanged portion.
- Do not apply pressure against outer ring face.
- Use arbor press whenever possible.
- Do not hammer on bearing faces.

3. Install nut and lock washer.

- Follow recommended clamping torque on dimensional table. Do not over tighten, otherwise undue stress may be set up in stud. Overtightening nut can also cause stretching of the stud diameter with consequent loosening of the stud in the housing member.
- A screwdriver slot is provided at the flanged end of the stud for the purpose of preventing the stud from turning when the nut is tightened. The bottom of the screwdriver slot is rounded and in some cases it may be necessary to use a special screwdriver having a rounded edge to hold the stud securely.
- An optional hexagonal hole is provided in the stud face on selected sizes for use with applications requiring greater than average thread torque or for ease of installation. In this modification, the ability to relubricate through the flange end of the stud, unless otherwise noted in the dimension tables, is eliminated.

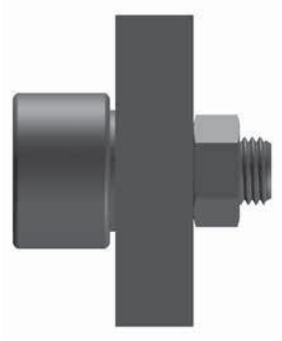

Cam Follower Engineering Section continued

Blind Hole Mounting

Sometimes a stud type follower must be mounted where a nut and lock-washer cannot be used on the threaded portion. In such blind hole mountings, special care must be given to the fit-up of the stem in the housing.

- The drilling diameter used for tapping will generally result in a loose fit between the stud and housing hole. This can lead to premature fatigue fracture of the stud in applications with varying or reverse radial load. Press fitting the stud into a reamed hole without tapped threads would be better for these applications. The non-hardened stud can be retained by drilling and pinning, or by using a set screw to bear against the stud.
- Certain applications require blind hole mounting into tapped threads. The hex hole option should be used in these cases so that adequate torque can be applied to provide good endplate support.

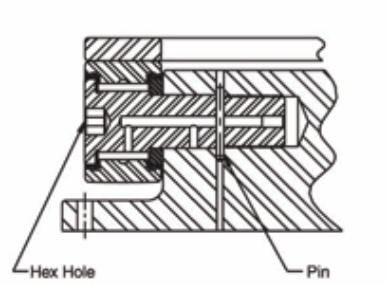

Blind Hole Mounting

Eccentric Bushing Mounting
Series CFE, BCFE, CFE-CR, SDCFE, SDMCFE, CFDE, MCFE, MCFDE, PCFE, FCFE, VCFE

In addition to the mounting details listed above, the following should be considered for proper mounting of stud type followers with the eccentric bushing option.

- The eccentric bushing diameter should have a .001” to .005” loose fit in the housing bore. Refer to dimensional table for specific housing bore diameter.

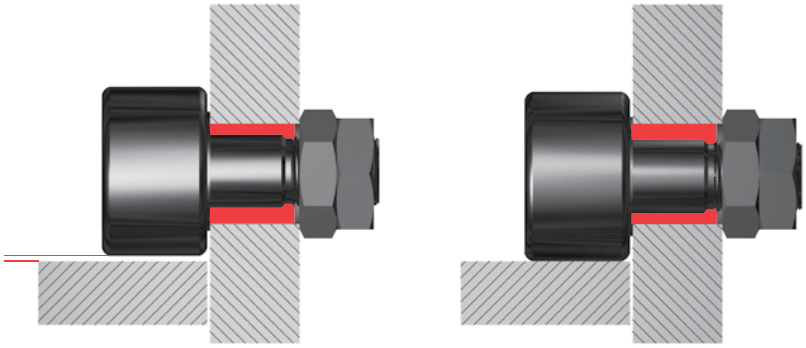

Cam Follower Engineering Section continued

- For proper end-wise clamping, housing width must be .010” wider than bushing length.
- Lock-nut or lock washer and nut is sufficient to hold the bearing at the desired position for most applications.
- Where a more positive means of holding a given position is required, the bushing and stem can be drilled for pinning. Bushing and exposed stem area is unhardened steel.
- Hex hole option allows more positive grip for adjustment and locking.

Series PCF, FCF, VCF, SDCF, SDMCF

These series cam followers and track rollers do not have an exposed stud face at the roller end. That face is enclosed by a metal plug assembled into the outer ring face. A loose stud fit in the housing is recommended so that minimal pressure is required to drive stud into the housing bore.

- Recommended housing bore fit for these series is .0005” to .0025” loose. Refer to dimensional table for specific housing bore diameter.
- A hex hole is provided at the threaded end of the stud for the purpose of holding the stud from turning when the nut is tightened.
- These series can not be tightened into a blind drilled and tapped hole.

Mounting Details - Yoke Type Cam Followers and Track Rollers Series CYR, CYR-CR, CYRD, MCYR, MCYRD

Endplate support is critical when mounting yoke-type series cam followers and track rollers. If the endplates are not properly backed up, they can be displaced from the inner ring. The preferred mounting method is to provide complete axial clamping of the endplates.

If the endplates can not be clamped end-wise, it is essential to have a close fit axially in the yoke in which the bearing is mounted to prevent the bearing endplates displacing axially.

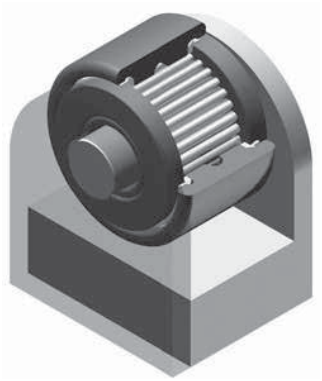

Cam Follower Engineering Section continued

The following are some general guidelines and details when installing yoke type followers.

1. **Inspect housing.**
- Clean, remove burrs and sharp edges.
2. **Check shaft diameter size.**
- Follow recommended shaft fits per table below. Refer to dimensional table for specific shaft diameter and tolerance.
3. **Press shaft through bearing within yoke housing**.
- For best bearing performance, mount follower with lubrication hole in the unloaded portion of the raceway.
- Apply pressure towards center or below on endplate face if pressing bearing onto shaft.
- Do not apply pressure against outer ring face.
- Use abor press whenever possible.
- Do not hammer on bearing faces.

Shaft Fit Selection - Inch Series CYR, CYR-CR, CYRD

Load	End-Wise Clamped	Fit	Shaft Condition
Light	Yes	Push	Not Hardened
Medium	Yes	Push	Hardened
Heavy	Yes	Drive or Press	Hardened
Light	No	Press	Not Hardened
Medium	No	Press	Hardened
Heavy	No	Press	Hardened

Shaft Fit Selection - Metric Series MCYR, MCYRD

Load	End-Wise Clamped	Fit	Shaft Condition
Light	Yes	g6	Not Hardened
Medium	Yes	g6	Hardened
Heavy	Yes	h6 or j6	Hardened
Light	No	j6	Not Hardened
Medium	No	j6	Hardened
Heavy	No	j6	Hardened

Special Modified Cam Follower and Track Roller Bearings

McGill offers certain options for the CF, CFH and MCF series cam follower and track roller bearings with low minimum order quantity and short order lead time. Contact customer service for price and delivery information, 1-800-626-2120.

Threaded Axial Lubrication Holes

Standard reamed axial hole is tapped to accommodate threaded lubrication fitting. This option is popular when using automatic lubrication systems.

Cam Follower Engineering Section continued

Specifications - Inch Series

Bearing OD Size	Thread Size
1/2 thru 11/16	Not Available
3/4 thru 1 3/8	1/4-28 UNF
1 1/2 thru 4	1/8 NPT

Specifications - Metric Series

Bearing OD Size	Thread Size
13	Not Available
16 thru 26	M6 X 0.75
35 thru 90	1/8 NPT

Axial Lubrication Holes Plugged

Options include threaded end, flange end or both ends of stud. Plugs are normally supplied loose in box. If the bearing is not to be lubricated in service, plugging the holes helps prevent entry of contamination. Bearings supplied with plugs installed saves user's time and provides a bearing ready to install.

Hex Hole or Screwdriver Slot at Threaded End of Stud

These options are typically selected when roller end of stud is not accessible at installation.

Annular Lubrication Groove at Stem Radial Hole

This option helps entry of lubricant through stud radial hole so that alignment of stem and housing lubrication holes is not critical

Hex Wrench Sizes

Basic Bearing No.	Hex Wrench Sizes	Basic Bearing No.	Hex Wrench Sizes
1/2	1/8	1 7/8	5/16
9/16	1/8	2	7/16
5/8	1/8	2 1/4	7/16
11/16	1/8	2 1/2	1/2
3/4	3/16	2 3/4	1/2
7/8	3/16	3	3/4
1	1/4	3 1/4	3/4
1 1/8	1/4	3 1/2	3/4
1 1/4	1/4	4	3/4
1 3/8	1/4	5	7/8
1 1/2	5/16	6	1
1 5/8	5/16	7, 8, 9, 10	1 1/4
1 3/4	5/16	-	-

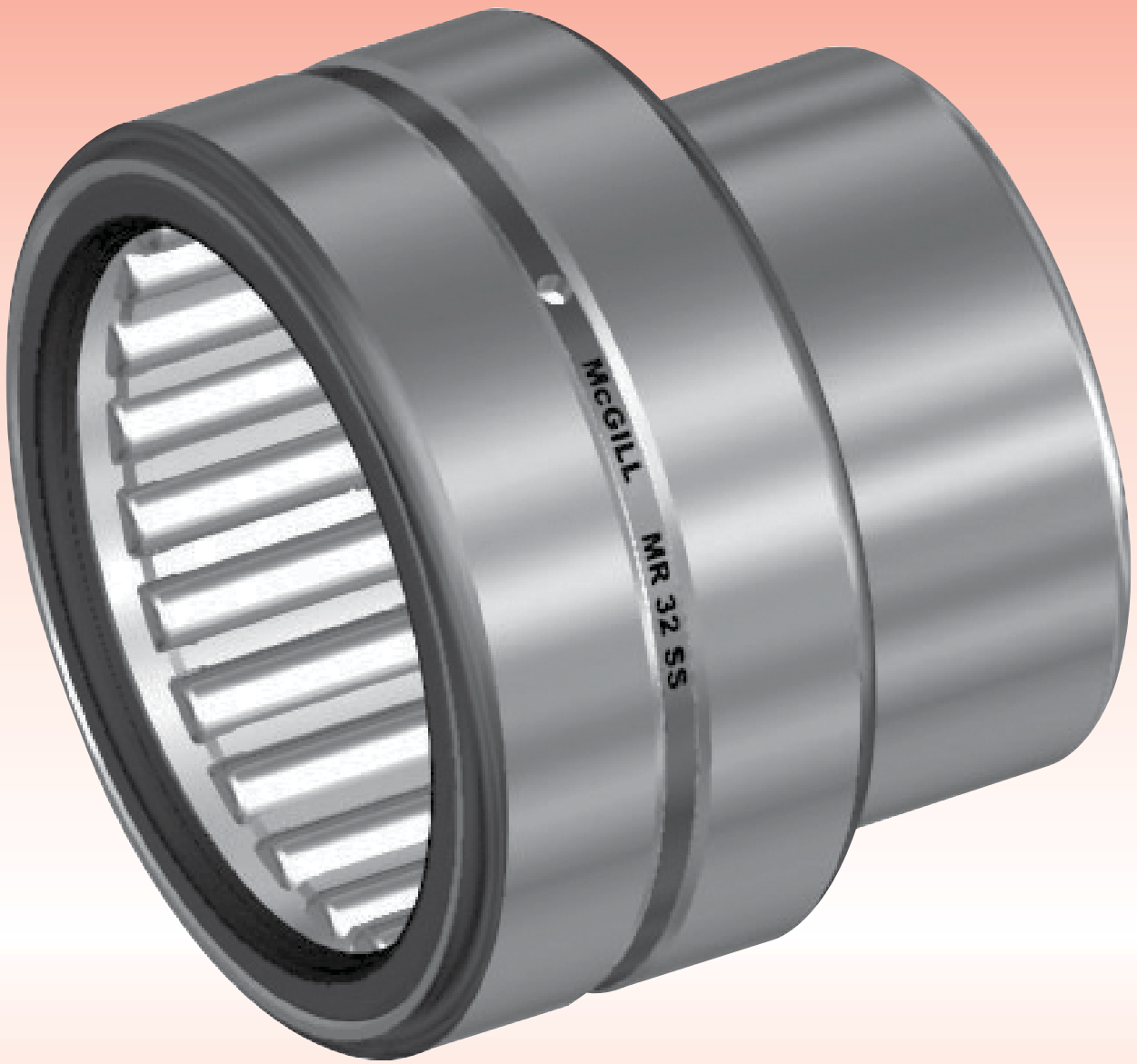
McGILL
MR 32 SS

Needle

Unmounted bearing assembly consisting of through hardened precision machined inner and outer raceways with either full complement or separated (cage) needle rolling elements. Depending on the bearing configuration the retainer can be land or roller riding and available with several seal options. Machined race needle bearings provide an antifriction solution when supporting rotating shafts with radial loads.

Bearing Configurations

Separable Or Non-Separable Inner/Outer Raceway

Shaft Diameter Range

1/2” To 9 1/4” And 15 mm To 235 mm

Materials

Bearing Quality Steel

Needle Selection Guide

		Product Series	Material / Roller Complement	Size Range: Inch	Size Range: Metric Equiv.
CAGEROL		MR	Bearing Steel Caged Needle Roller	5/8” - 9 1/4”	16 - 235
		MR Sealed		5/8” - 4 1/4”	16 - 108
		MR Narrow		5/8” - 6 1/2”	16 - 165
GUIDEROL		GR	Bearing Steel Full Complement Center Guided Needle Roller	1/2” - 9 1/4”	13 - 235
		GR Sealed		5/8” - 4 1/4”	16 - 108
		GR Narrow		5/8” - 6 1/2”	16 - 165
MULTI-ROL		RS	Bearing Steel Full Complement Needle Roller	3/4” - 3”	19 - 76
		RD		1 1/4” - 4”	32 - 102
Journal		200 Series	Bearing Steel Caged Roller	1 3/16” - 8 5/8”	30 - 220
		300 Series		1” - 5 3/16”	25 - 130

Metric dimensions are for reference only.
Listed needle roller bearings are manufactured to inch dimensions.

* For estimating purpose only, individually sizes may vary and are subject to change without notification

Design Characteristics						Features							
Limited Radial Space	Dynamic Load Rating	Static Load Rating	Oscillating Capability	High Speed	Relative Base Cost *	Separable Inner Race	Double Row	Oil Holes	Rubber Lip Seal	Metallic Shield	DS Matching	Separable Outer	Page No.
●	●	◒	◒	●	$	O	-	S	-	-	O	-	C-9
●	◒	○	◒	○	$	O	-	S	S	-	O	-	C-9
●	◒	○	◒	●	$	O	-	S	-	-	O	-	C-9
●	◒	◒	●	◒	$$$	O	-	S	-	-	O	-	C-21
●	◒	◒	●	○	$$$	O	-	S	S	-	O	-	C-21
●	◒	◒	●	◒	$$$	O	-	S	-	-	O	-	C-21
●	◒	◒	●	◒	$$	-	-	S	-	S	O	-	C-33
●	◒	●	●	◒	$$	-	S	S	-	S	O	-	C-34
◒	◒	◒	◒	◒	$$$	O	-	S	-	-	-	S	C-37
◒	◒	◒	◒	◒	$$$	O	-	S	-	-	-	S	C-37

Utilize Mi Inner Rings For Installations On Unhardened Shafts
Higher Radial Loads
Relubrication To Help Promote Long Operating Life
Contamination Barrier Lubrication Retention
Elevated Temperature Applications (When Applied With Suitable Lubricant)
Recommended For Load Sharing When Mounting Bearing Pairs
Available As Complete Assembly Or Individual Components

O = Optional
S = Standard
○ = Not Recommended

◒ ◒ ◒ ◒ ●

Poor ←——→ Best

Note: Cost ranges are approximate in the secondary dimension

McGill CAGEROL®

McGill CAGEROL® machined race needle bearings are manufactured from bearing quality steel. Most sizes use crowned, or end relieved, rollers to help reduce end stresses and allows for greater misalignment. The rollers are separated by a steel retainer (cage) to help achieve higher speeds and provide a lubricant reservoir. CAGEROL® bearings are constructed with radial lubrication hole and groove on the outer and optional inner raceway (MI-series) for relubrication through the housing or shaft. Other options include a variety of seal configurations to either help prevent contaminant entry or contain the lubricant. Depending on your preference, these bearings are available in a wide variety of sizes and sealing options as illustrated on the pages to follow.

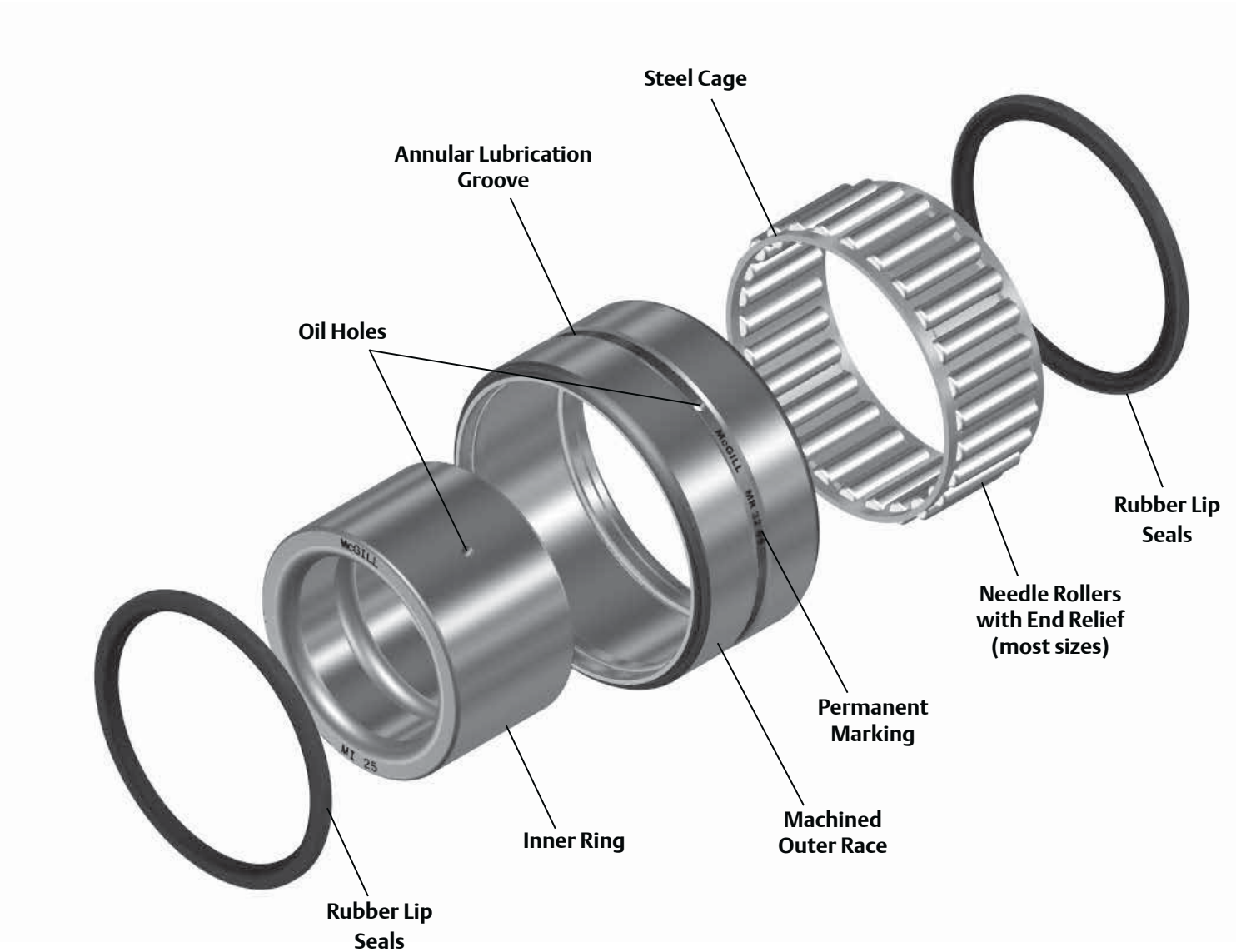

CAGEROL® Nomenclature

MR 18 N S DS

Basic Type
MR - CAGEROL® Bearing

Series Identifier
18 / 16 = 1.125” Bore Diameter

Optional Suffix
N - Narrow Width (Unsealed Only)
Typically .25” Narrower

Sealing
S - Single Seal With Lip Turned In
SS - Double Seal With Both Seal Lips Turned In
RSS – Double Seal With Both Seal Lips Turned Out
RS – Single Seal With Lip Turned Out
SRS – Double Seal With One Lip Turned In And One Lip Turned Out

Optional Suffix
DS - Matched Pair For Duplex Mounting

Inner Ring

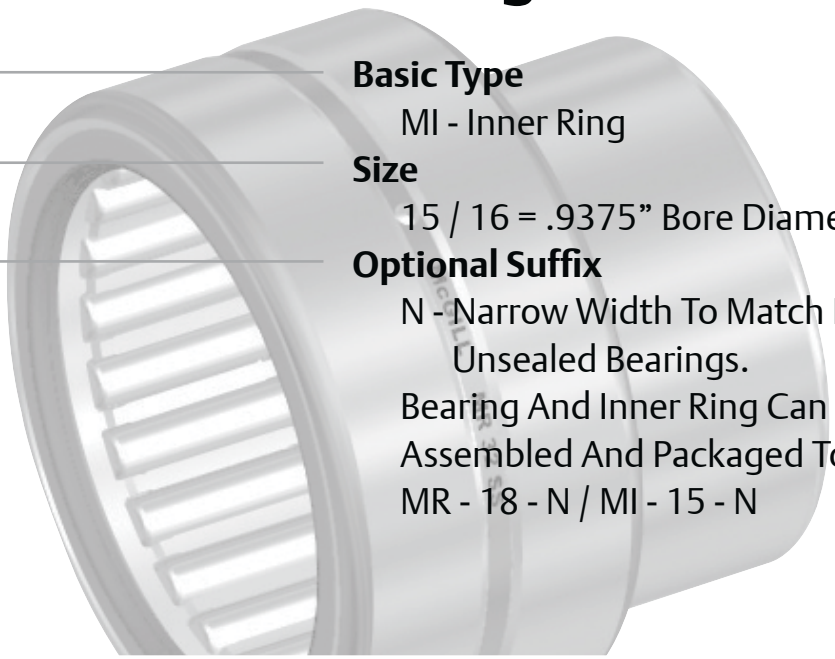

MI 15 N

Basic Type
MI - Inner Ring

Size
15 / 16 = .9375” Bore Diameter

Optional Suffix
N - Narrow Width To Match Narrow Unsealed Bearings.
Bearing And Inner Ring Can Be Assembled And Packaged Together:
MR - 18 - N / MI - 15 - N

Features and Benefits

Machined Outer Race

Race manufactured from bearing quality steel and hardened to carry heavy dynamic and static loads.

Needle Rollers with End Relief (Most Sizes)

Precision Needle Rollers provide high radial load capabilities in small radial envelope dimension. End relief features help reduce raceway stress when shaft misalignment occurs.

Steel Cage

Welded construction minimizes roller radial play for ease of assembly and provides roller guidance helping to reduce friction. The spacing provided by the retainer contributes to the high speed capabilities and lubricant reservoir within the bearing envelope.

Annular Lubrication Groove

The groove provides a circumferential path to direct lubricant to the hole when lubricating through the housing.

Factory Grease Fill

The Sealed CAGEROL bearings are factory lubricated with a medium temperature (-30° to 250°F, -34° to 121° C) NLGI 1 grease, unsealed bearings packaged with light oil film as a rust preventative. Contact Application Engineering when application conditions require special lubricants.

Options

Seals

The rubber lip seal is capable of 250° F maximum temperature and is available in several different configurations.

S

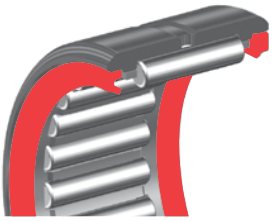

SS

RS

RSS

SRS

"DS" Matched Bearings – Load Sharing

When two bearings are installed with the distance between both bearing less than the width of one bearing, it is recommended the bearings be diametrically matched to prevent unequal load sharing. The option, when applicable matches OD and ID tolerances, diametrical clearance within 30% of the tolerance range and the radial runout within 20% of the tolerance range with high point of runout indicated on the bearing faces. For more information and matching factors please review the engineering section for matched bearings. Matched bearings are packaged as sets.

Machined Inner Ring (MI)

Precision ground inner ring provides a hardened raceway for the rollers when used with an unhardened shaft. The ring contains an oil hole and annular groove for relubrication of the bearing and can be used with both CAGEROL and GUIDEROL bearings or can be utilized as a bushing in plain bearing applications.

Grease Options

When requested, standard bearings can be factory filled with customer specified lubricant.

McGILL® CAGEROL® Bearings

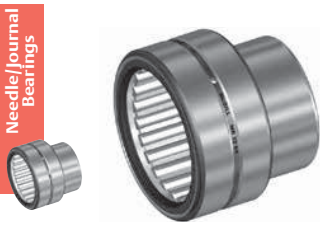

Basic Construction Type: Machined Race with Optional Separable Inner Ring

Rolling Elements: Cage Guided Precision Needles

Bearing Material: Bearing Quality Steel

Seal Type: Rubber Lip

Lubrication: Sealed Bearings: Lithium Soap Grease NLGI #1
Unsealed Bearings: Rust Preventative

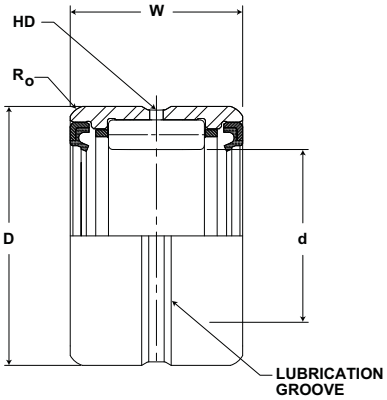

MR SERIES

Part No.		d		D		W	Housing Bore Diameter			HD	Ro	Limiting Speed (In Oil)*	Basic Dynamic Rating	Basic Static Rating	Outer & Roller Assembly Weight
McGill Outer Ring & Roller Assembly	Military No.	Shaft Diameter		Outside Diameter		Width				Radial Lub. Hole Diameter	Max Hsg Radius to Clear				
		inch mm		inch mm		inch mm	inch mm			inch mm		RPM	lb/N	lb/N	lb kg
		Nom	Tol.	Nom	Tol.	Tol +0/-.005 (+0/.13)	Rotating	Stationary	Tol.	(Ref)	(Ref)				
MR 10 N	MS 51961-1	.6250 15.9	+0/-.0005 +0/-.013	1.1250 28.6	+0/-.0005 +0/-.013	.750 19.05	1.1247 28.579	1.1257 28.604	+0/-.0007 +0/-.018	.08 2	0.03 1	19250	4,320 19,215	4,300 19,126	.12 .05
	MS 51961-1						1.1247 28.579	1.1257 28.604	+0/-.0007 +0/-.018	.08 2	0.03 1	19250	4,320 19,215	4,300 19,126	.12 .05
MR 10 SS, S, RS, SRS, RSS						1.000 25.40	1.1247 28.579	1.1257 28.604	+0/-.0007 +0/-.018	.08 2	0.03 1	6100	4,320 19,215	4,300 19,126	.15 .07
MR 10							1.1247 28.579	1.1257 28.604	+0/-.0007 +0/-.018	.08 2	0.03 1	19250	5,930 26,377	6,500 28,912	.15 .07
MR 12 N	MS 51961-2	.7500 19.1	+0/-.0005 +0/-.013	1.2500 31.8	+0/-.0005 +0/-.013	.750 19.05	1.2497 31.755	1.2507 31.780	+0/-.0007 +0/-.018	.08 2	0.04 1	16000	4,990 22,196	5,400 24,019	.14 .06
	MS 51961-2						1.2497 31.755	1.2507 31.780	+0/-.0007 +0/-.018	.08 2	0.04 1	16000	4,990 22,196	5,400 24,019	.14 .06
MR 12 SS, S, RS, SRS, RSS						1.000 25.40	1.2497 31.755	1.2507 31.780	+0/-.0007 +0/-.018	.08 2	0.04 1	5100	4,990 22,196	5,400 24,019	.17 .08
MR 12	MS 51961-3						1.2497 31.755	1.2507 31.780	+0/-.0007 +0/-.018	.08 2	0.04 1	16000	6,830 30,380	8,100 36,029	.17 .08
MR 14 N	MS 51961-5	.8750 22.2	+0/-.0005 +0/-.013	1.3750 34.9	+0/-.0005 +0/-.013	.750 19.05	1.3747 34.931	1.3757 34.957	+0/-.0007 +0/-.018	.08 2	0.04 1	13750	5,280 23,485	6,000 26,688	.16 .07
	MS 51961-5						1.3747 34.931	1.3757 34.957	+0/-.0007 +0/-.018	.08 2	0.04 1	13750	5,280 23,485	6,000 26,688	.16 .07
MR 14 SS, S, RS, SRS, RSS						1.000 25.40	1.3747 34.931	1.3757 34.957	+0/-.0007 +0/-.018	.08 2	0.04 1	4400	5,280 23,485	6,000 26,688	.21 .09
MR 14	MS 51961-6						1.3747 34.931	1.3757 34.957	+0/-.0007 +0/-.018	.08 2	0.04 1	13750	7,240 32,204	9,000 40,032	.21 .09
MR 16 N	MS 51961-8	1.0000 25.4	+0/-.0005 +0/-.013	1.5000 38.1	+0/-.0005 +0/-.013	.750 19.05	1.4997 38.107	1.5007 38.133	+0/-.0007 +0/-.018	.08 2	0.04 1	12000	5,840 25,976	7,100 31,581	.20 .09
	MS 51961-8						1.4997 38.107	1.5007 38.133	+0/-.0007 +0/-.018	.08 2	0.04 1	12000	5,840 25,976	7,100 31,581	.20 .09
MR 16 SS, S, RS, SRS, RSS						1.000 25.40	1.4997 38.107	1.5007 38.133	+0/-.0007 +0/-.018	.08 2	0.04 1	3800	5,840 25,976	7,100 31,581	.23 .10
MR 16	MS 51961-9						1.4997 38.107	1.5007 38.133	+0/-.0007 +0/-.018	.08 2	0.04 1	12000	8,000 35,584	10,600 47,149	.23 .10
MR 18 N	MS 51961-11	1.1250 28.6	+0/-.0005 +0/-.013	1.6250 41.3	+0/-.0005 +0/-.013	.750 19.05	1.6247 41.284	1.6257 41.309	+0/-.0007 +0/-.018	.09 2	0.04 1	10700	8,720 38,787	12,200 54,266	.24 .11
	MS 51961-11						1.6247 41.284	1.6257 41.309	+0/-.0007 +0/-.018	.09 2	0.04 1	10700	8,720 38,787	12,200 54,266	.24 .11
MR 18 SS, S, RS, SRS, RSS						1.000 25.40	1.6247 41.284	1.6257 41.309	+0/-.0007 +0/-.018	.09 2	0.04 1	3400	8,720 38,787	12,200 54,266	.32 .15
MR 18	MS 51961-12						1.6247 41.284	1.6257 41.309	+0/-.0007 +0/-.018	.09 2	0.04 1	10700	10,900 48,483	16,300 72,502	.32 .15
MR 20 N	MS 51961-14	1.2500 31.8	+0/-.0005 +0/-.013	1.7500 44.5	+0/-.0005 +0/-.013	1.000 25.40	1.7497 44.460	1.7507 44.485	+0/-.0007 +0/-.018	.09 2	0.04 1	9600	9,020 40,121	13,100 58,269	.27 .12
MR 20 SS, S, RS, SRS, RSS						1.250 31.75	1.7497 44.460	1.7507 44.485	+0/-.0007 +0/-.018	.09 2	0.04 1	3050	9,020 40,121	13,100 58,269	.34 .15
MR 20	MS 51961-15						1.7497 44.460	1.7507 44.485	+0/-.0007 +0/-.018	.09 2	0.04 1	9600	11,300 50,262	17,500 77,840	.34 .15

Metric dimensions for reference only.
For sealed bearings, Outside diameter may be slightly oversize due to seal press fit.
For DS matching as DS suffix to part number
* For bearing properly filled with #1 grease reduce speed by 50%

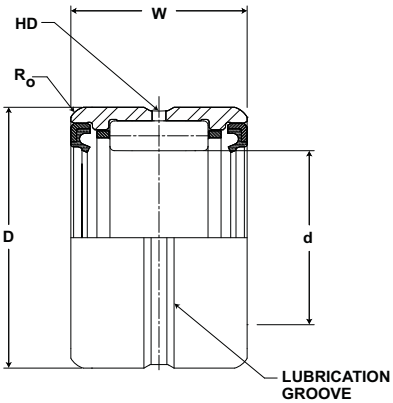

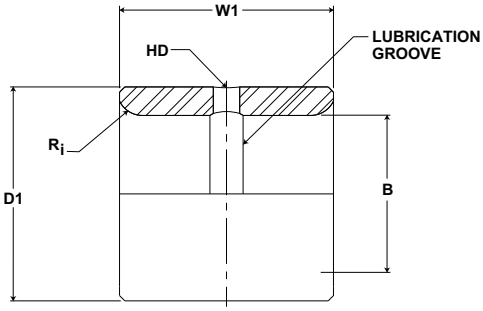

MR SERIES

Part No.		Military No.	B		D1		W1	HD	Ri	Recommended Shaft Diameter with inner ring			Inner Weight
McGill Outer Ring & Roller Assembly	Separable Inner Ring Only		Bore Diameter		Outside Diameter		Width	Radial Lub. Hole Diameter	Max Shaft Radius to Clear				
			inch mm		inch mm		inch mm			inch mm			lb kg
			Nom	Tol.	Nom	Tol.	Tol +0/-.005 (+0/.13)	(Ref)	(Ref)	Rotating	Stationary	Tol.	
MR 10 N	MI 6 N	MS 500072-1	.3750 9.529	+0/-.0004 +0/-.010	.6245 15.9	+0/-.0004 +0/-.010	.760 19.3	.09 2.4	.25 6.4	.3755 9.541	.3747 9.521	+0/-.0005 +0/-.013	.05 .02
	MI 7 N		.4375 11.117	+0/-.0004 +0/-.010	.6245 15.9	+0/-.0004 +0/-.010	.760 19.3	.09 2.4	.25 6.4	.4380 11.130	.4372 11.109	+0/-.0005 +0/-.013	.04 .02
MR 10 SS, S, RS, SRS, RSS	MI 6		.3750 9.529	+0/-.0004 +0/-.010	.6245 15.9	+0/-.0004 +0/-.010	1.010 25.7	.09 2.4	.25 6.4	.3755 9.541	.3747 9.521	+0/-.0005 +0/-.013	.05 .02
MR 10			.3750 9.529	+0/-.0004 +0/-.010	.6245 15.9	+0/-.0004 +0/-.010	1.010 25.7	.09 2.4	.25 6.4	.3755 9.541	.3747 9.521	+0/-.0005 +0/-.013	.05 .02
MR 12 N	MI 8 N	MS 500072-2	.5000 12.705	+0/-.0004 +0/-.010	.7493 19.0	+0/-.0005 +0/-.013	.760 19.3	.13 3.2	.40 10.2	.5005 12.718	.4997 12.697	+0/-.0005 +0/-.013	.04 .02
	MI 9 N		.5625 14.293	+0/-.0004 +0/-.010	.7493 19.0	+0/-.0005 +0/-.013	.760 19.3	.13 3.2	.40 10.2	.5630 14.306	.5623 14.286	+0/-.0005 +0/-.013	.04 .02
MR 12 SS, S, RS, SRS, RSS	MI 8	MS 500072-3	.5000 12.705	+0/-.0004 +0/-.010	.7493 19.0	+0/-.0005 +0/-.013	1.010 25.7	.13 3.2	.40 10.2	.5005 12.718	.4997 12.697	+0/-.0005 +0/-.013	.06 .03
MR 12			.5000 12.705	+0/-.0004 +0/-.010	.7493 19.0	+0/-.0005 +0/-.013	1.010 25.7	.13 3.2	.40 10.2	.5005 12.718	.4997 12.697	+0/-.0005 +0/-.013	.06 .03
MR 14 N	MI 10 N	MS 500072-4	.6250 15.881	+0/-.0004 +0/-.010	.8743 22.2	+0/-.0005 +0/-.013	.760 19.3	.13 3.2	.40 10.2	.6255 15.894	.6247 15.874	+0/-.0005 +0/-.013	.06 .03
	MI 11 N		.6875 17.469	+0/-.0004 +0/-.010	.8743 22.2	+0/-.0005 +0/-.013	.760 19.3	.13 3.2	.40 10.2	.6880 17.482	.6872 17.462	+0/-.0005 +0/-.013	.05 .02
MR 14 SS, S, RS, SRS, RSS	MI 10		.6250 15.881	+0/-.0004 +0/-.010	.8743 22.2	+0/-.0005 +0/-.013	1.010 25.7	.13 3.2	.40 10.2	.6255 15.894	.6247 15.874	+0/-.0005 +0/-.013	.08 .04
MR 14			.6250 15.881	+0/-.0004 +0/-.010	.8743 22.2	+0/-.0005 +0/-.013	1.010 25.7	.13 3.2	.40 10.2	.6255 15.894	.6247 15.874	+0/-.0005 +0/-.013	.08 .04
MR 16 N	MI 12 N	MS 500072-5	.7500 19.058	+0/-.0004 +0/-.010	.9993 25.4	+0/-.0005 +0/-.013	.760 19.3	.13 3.2	.40 10.2	.7505 19.070	.7497 19.050	+0/-.0005 +0/-.013	.07 .03
	MI 13 N	MS 500072-6	.8125 20.646	+0/-.0005 +0/-.013	.9993 25.4	+0/-.0005 +0/-.013	.760 19.3	.13 3.2	.40 10.2	.8130 20.658	.8121 20.638	+0/-.0005 +0/-.013	.07 .03
MR 16 SS, S, RS, SRS, RSS	MI 12		.7500 19.058	+0/-.0004 +0/-.010	.9993 25.4	+0/-.0005 +0/-.013	1.010 25.7	.13 3.2	.40 10.2	.7505 19.070	.7497 19.050	+0/-.0005 +0/-.013	.10 .05
MR 16	MI 13	MS 500072-7	.8125 20.646	+0/-.0005 +0/-.013	.9993 25.4	+0/-.0005 +0/-.013	1.010 25.7	.13 3.2	.40 10.2	.8130 20.658	.8121 20.638	+0/-.0005 +0/-.013	.11 .05
MR 18 N	MI 14 N	MS 500072-8	.8750 22.234	+0/-.0005 +0/-.013	1.124 28.6	+0/-.0005 +0/-.013	1.010 25.7	.13 3.2	.40 10.2	.8755 22.246	.8746 22.226	+0/-.0005 +0/-.013	.11 .05
	MI 15 N	MS 500072-9	.9375 23.822	+0/-.0005 +0/-.013	1.124 28.6	+0/-.0005 +0/-.013	1.010 25.7	.13 3.2	.40 10.2	.9380 23.835	.9371 23.814	+0/-.0005 +0/-.013	.11 .05
MR 18 SS, S, RS, SRS, RSS	MI 14		.8750 22.234	+0/-.0005 +0/-.013	1.124 28.6	+0/-.0005 +0/-.013	1.260 32.0	.13 3.2	.40 10.2	.8755 22.246	.8746 22.226	+0/-.0005 +0/-.013	.13 .06
MR 18			.8750 22.234	+0/-.0005 +0/-.013	1.124 28.6	+0/-.0005 +0/-.013	1.260 32.0	.13 3.2	.40 10.2	.8755 22.246	.8746 22.226	+0/-.0005 +0/-.013	.13 .06
MR 20 N	MI 16 N	MS 500072-10	1.0000 25.410	+0/-.0005 +0/-.013	1.249 31.7	+0/-.0006 +0/-.015	1.010 25.7	.13 3.2	.40 10.2	1.0005 25.423	0.9996 25.402	+0/-.0005 +0/-.013	.13 .06
MR 20 SS, S, RS, SRS, RSS	MI 16		1.0000 25.410	+0/-.0005 +0/-.013	1.249 31.7	+0/-.0006 +0/-.015	1.260 32.0	0.13 3	0.40 10	1.001 25.4	1.000 25.4	+0/-.0005 +0/-.013	.16 .07
MR 20		MS 500072-11	1.0000 25.410	+0/-.0005 +0/-.013	1.249 31.7	+0/-.0006 +0/-.015	1.260 32.0	0.13 3	0.40 10	1.001 25.4	1.000 25.4	+0/-.0005 +0/-.013	.16 .07

Not all parts are available from stock. Please contact customer service for availability (800) 626-2120.
For more information on bearing capabilities outside of our standard offering, please contact Application Engineering (800) 626-2093.

McGILL® CAGEROL® Bearings

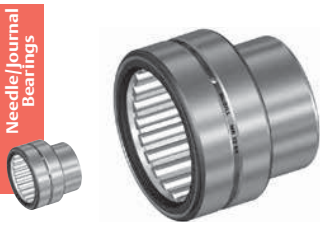

Basic Construction Type: Machined Race With Optional Separable Inner Ring

Rolling Elements: Cage Guided Precision Needles

Bearing Material: Bearing Quality Steel

Seal Type: Rubber Lip

Lubrication: Sealed Bearings: Lithium Soap Grease NLGI #1 Unsealed Bearings: Rust Preventative

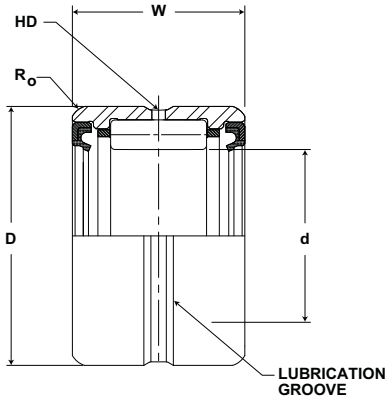

MR SERIES (continued)

Part No.		d		D		W	Housing Bore Diameter			HD	Ro	Limiting Speed (In Oil)*	Basic Dynamic Rating	Basic Static Rating	Outer & Roller Assembly Weight
McGill Outer Ring & Roller Assembly	Military No.	Shaft Diameter		Outside Diameter		Width				Radial Lub. Hole Diameter	Max Hsg Radius to Clear				
		inch mm		inch mm		inch mm	inch mm			inch mm		RPM	lb/N	lb/N	lb kg
		Nom	Tol.	Nom	Tol.	Tol +0/-.005 (+0/.13)	Rotating	Stationary	Tol.	(Ref)	(Ref)				
MR 22 N	MS 51961-18	1.3750 34.9	+0/-.0005 +0/-.013	1.8750 47.6	+0/-.0006 +0/-.015	1.000 25.40	1.8747 47.636	1.8757 47.662	+0/-.0007 +0/-.018	.09 2	0.04 1	8750	9,640 42,879	14,700 65,386	.31 .14
MR 22 SS, S, RS, SRS, RSS						1.250 31.75	1.8747 47.636	1.8757 47.662	+0/-.0007 +0/-.018	.09 2	0.04 1	2800	9,640 42,879	14,700 65,386	.36 .16
MR 22	MS 51961-19						1.8747 47.636	1.8757 47.662	+0/-.0007 +0/-.018	.09 2	0.04 1	8750	12,100 53,821	19,700 87,626	.36 .16
MR 24 N	MS 51961-21	1.5000 38.1	+0/-.0005 +0/-.013	2.0625 52.4	+0/-.0006 +0/-.015	1.000 25.40	2.0621 52.398	2.0632 52.426	+0/-.0007 +0/-.018	.09 2	0.06 2	8000	10,300 45,814	15,500 68,944	.41 .19
MR 24 SS, S, RS, SRS, RSS						1.250 31.75	2.0621 52.398	2.0632 52.426	+0/-.0007 +0/-.018	.09 2	0.06 2	2500	10,300 45,814	15,500 68,944	.47 .21
MR 24	MS 51961-22						2.0621 52.398	2.0632 52.426	+0/-.0007 +0/-.018	.09 2	0.06 2	8000	13,000 57,824	20,800 92,518	.47 .21
MR 26 N	MS 51961-24	1.6250 41.3	+0/-.0005 +0/-.013	2.1875 55.6	+0/-.0006 +0/-.015	1.000 25.40	2.1871 55.574	2.1882 55.602	+0/-.0007 +0/-.018	.09 2	0.06 2	7400	10,600 47,149	16,400 72,947	.46 .21
MR 26 SS, S, RS, SRS, RSS						1.250 31.75	2.1871 55.574	2.1882 55.602	+0/-.0007 +0/-.018	.09 2	0.06 2	2350	10,600 47,149	16,400 72,947	.51 .23
MR 26	MS 51961-25						2.1871 55.574	2.1882 55.602	+0/-.0007 +0/-.018	.09 2	0.06 2	7400	13,300 59,158	22,100 98,301	.51 .23
MR 28 N	MS 51961-27	1.7500 44.5	+0/-.0005 +0/-.013	2.3125 58.8	+0/-.0006 +0/-.015	1.000 25.40	2.3121 58.750	2.3132 58.778	+0/-.0007 +0/-.018	.09 2	0.06 2	6850	11,200 49,818	18,100 80,509	.47 .21
MR 28 SS, S, RS, SRS, RSS						1.250 31.75	2.3121 59	2.3132 59	+0/-.0007 +0/-.018	.09 2	0.06 2	2200	11,200 49,818	18,100 80,509	.55 .25
MR 28	MS 51961-28						2.3121 59	2.3132 59	+0/-.0007 +0/-.018	.09 2	0.06 2	6850	14,100 62,717	24,400 108,531	.55 .25
	MS 51961-28						2.3121 59	2.3132 59	+0/-.0007 +0/-.018	.09 2	0.06 2	6850	14,100 62,717	24,400 108,531	.55 .25
MR 30 SS, S, RS, SRS, RSS		1.8750 47.6	+0/-.0005 +0/-.013	2.4375 61.9	+0/-.0006 +0/-.015	1.250 31.75	2.4371 61.927	2.4382 61.955	+0/-.0007 +0/-.018	.09 2	0.06 2	2040	11,400 50,707	19,000 84,512	.59 .27
MR 30	MS 51961-29						2.4371 62	2.4382 62	+0/-.0007 +0/-.018	.09 2	0.06 2	6400	14,400 64,051	25,600 113,869	.59 .27
MR 31		1.9375 49.2	+0/-.0005 +0/-.013	2.5000 63.5	+0/-.0006 +0/-.015	1.250 31.75	2.4996 63.515	2.5007 63.543	+0/-.0007 +0/-.018	.09 2	0.06 2	6200	12,400 55,155	22,400 99,635	.60 .27
MR 32 N		2.0000 50.8	+0/-.0005 +0/-.013	2.5625 65.1	+0/-.0006 +0/-.015	1.000 25.40	2.5621 65.103	2.5632 65.131	+0/-.0007 +0/-.018	.09 2	0.06 2	6000	12,000 53,376	20,700 92,074	.55 .25
MR 32 SS, S, RS, SRS, RSS						1.250 31.75	2.5621 65	2.5632 65	+0/-.0007 +0/-.018	.09 2	0.06 2	1900	12,000 53,376	20,700 92,074	.61 .28
MR 32	MS 51961-30						2.5621 65	2.5632 65	+0/-.0007 +0/-.018	.09 2	0.06 2	6000	15,200 67,610	27,900 124,099	.61 .28
	MS 51961-30						2.5621 65	2.5632 65	+0/-.0007 +0/-.018	.09 2	0.06 2	6000	15,200 67,610	27,900 124,099	.61 .28
MR 36 N	MS 51961-31	2.2500 57.2	+0/-.0005 +0/-.013	3.0000 76.2	+0/-.0006 +0/-.015	1.500 38.10	2.9996 76.220	3.0007 76.248	+0/-.0007 +0/-.018	.13 3	0.08 2	5350	22,400 99,635	39,100 173,917	1.13 .51
MR 36 SS, S, RS, SRS, RSS						1.750 44.45	2.9996 76	3.0007 76	+0/-.0007 +0/-.018	.13 3	0.08 2	1700	22,400 99,635	39,100 173,917	1.32 .59
MR 36	MS 51961-32						2.9996 76	3.0007 76	+0/-.0007 +0/-.018	.13 3	0.08 2	5350	26,000 115,648	47,400 210,835	1.32 .59

Metric dimensions for reference only.
For sealed bearings, Outside diameter may be slightly oversize due to seal press fit.
For DS matching as DS suffix to part number
* For bearing properly filled with #1 grease reduce speed by 50%

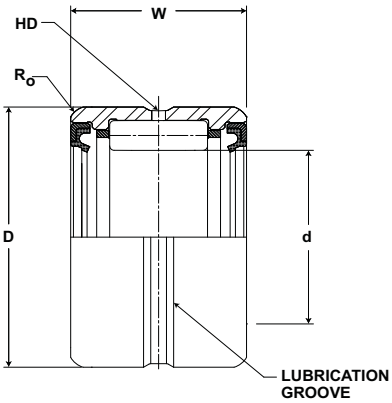

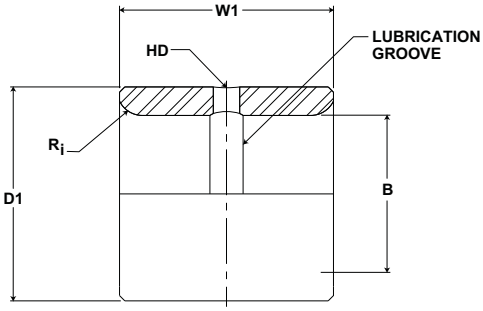

MR SERIES (continued)

Part No.		Military No.	B		D1		W1	HD	Ri	Recommended Shaft Diameter with inner ring			Inner Weight
McGill Outer Ring & Roller Assembly	Separable Inner Ring Only		Bore Diameter		Outside Diameter		Width	Radial Lub. Hole Diameter	Max Shaft Radius to Clear				
			inch mm		inch mm		inch mm			inch mm			lb kg
			Nom	Tol.	Nom	Tol.	Tol +0/-.005 (+0/.13)	(Ref)	(Ref)	Rotating	Stationary	Tol.	
MR 22 N	MI 18 N	MS 500072-12	1.1250 28.586	+0/-.0005 +0/-.013	1.374 34.9	+0/-.0006 +0/-.015	1.010 25.7	.13 3.2	.40 10.2	1.1255 28.599	1.1246 28.579	+0/-.0005 +0/-.013	.14 .06
MR 22 SS, S, RS, SRS, RSS	MI 17		1.0625 26.998	+0/-.0005 +0/-.013	1.374 34.9	+0/-.0006 +0/-.015	1.260 32.0	0.13 3	0.40 10	1.0630 27.011	1.0621 26.991	+0/-.0005 +0/-.013	.16 .07
MR 22	MI 18	MS 500072-13	1.1250 28.586	+0/-.0005 +0/-.013	1.374 34.9	+0/-.0006 +0/-.015	1.260 32.0	0.13 3	0.40 10	1.1255 28.599	1.1246 28.579	+0/-.0005 +0/-.013	.17 .08
MR 24 N	MI 20 N	MS 500072-15	1.2500 31.763	+0/-.0005 +0/-.013	1.499 38.1	+0/-.0006 +0/-.015	1.010 25.7	.13 3.2	.06 1.5	1.2505 31.775	1.2496 31.755	+0/-.0005 +0/-.013	.19 .09
MR 24 SS, S, RS, SRS, RSS	MI 19	MS 500072-16	1.250 31.8	+0/-.0005 +0/-.013	1.499 38.1	+0/-.0006 +0/-.015	1.260 32.0	.13 3.2	.06 1.5	1.2505 31.775	1.2497 31.755	+0/-.0005 +0/-.013	.24 .11
	MI 20	MS 500072-14	1.1875 30.174	+0/-.0005 +0/-.013	1.499 38.1	+0/-.0006 +0/-.015	1.260 32.0	.13 3.2	.06 1.5	1.1880 30.187	1.1871 30.167	+0/-.0005 +0/-.013	.22 .09
MR 26 N	MI 21 N	MS 500072-17	1.3125 33.351	+0/-.0005 +0/-.013	1.624 41.3	+0/-.0006 +0/-.015	1.010 25.7	.13 3.2	.06 1.5	1.3130 33.363	1.3121 33.343	+0/-.0005 +0/-.013	.20 .09
MR 26 SS, S, RS, SRS, RSS	MI 21		1.3125 33.351	+0/-.0005 +0/-.013	1.624 41.3	+0/-.0006 +0/-.015	1.260 32.0	0.13 3	0.06 2	1.3130 33.363	1.3122 33.343	+0/-.0005 +0/-.013	.26 .12
MR 26	MI 22 4S	MS 500072-18	1.3750 34.939	+0/-.0005 +0/-.013	1.624 41.3	+0/-.0006 +0/-.015	1.260 32.0	0.13 3	0.06 2	1.3755 34.951	1.3746 34.931	+0/-.0005 +0/-.013	.20 .09
MR 28 N	MI 24 N	MS 500072-21	1.5000 38.115	+0/-.0005 +0/-.013	1.749 44.4	+0/-.0006 +0/-.015	1.010 25.7	.13 3.2	.06 1.5	1.5005 38.128	1.4996 38.107	+0/-.0005 +0/-.013	.22 .09
MR 28 SS, S, RS, SRS, RSS	MI 22	MS 500072-19	1.3750 34.939	+0/-.0005 +0/-.013	1.749 44.4	+0/-.0006 +0/-.015	1.260 32.0	.13 3.2	.06 1.5	1.3755 34.951	1.3746 34.931	+0/-.0005 +0/-.013	.26 .12
	MI 23	MS 500072-20	1.4375 36.527	+0/-.0005 +0/-.013	1.749 44.4	+0/-.0006 +0/-.015	1.260 32.0	.13 3.2	.06 1.5	1.4380 36.540	1.4371 36.519	+0/-.0005 +0/-.013	.27 .12
	MI 24	MS 500072-22	1.5000 38.115	+0/-.0005 +0/-.013	1.749 44.4	+0/-.0006 +0/-.015	1.260 32.0	.13 3.2	.06 1.5	1.5005 38.128	1.4996 38.107	+0/-.0005 +0/-.013	.22 .09
MR 30 SS, S, RS, SRS, RSS	MI 25 4S		1.5625 39.703	+0/-.0005 +0/-.013	1.874 47.6	+0/-.0006 +0/-.015	1.260 32.0	.13 3.2	0.06 2	1.5630 39.716	1.5621 39.696	+0/-.0005 +0/-.013	.27 .12
MR 30			1.5625 39.703	+0/-.0005 +0/-.013	1.874 47.6	+0/-.0006 +0/-.015	1.260 32.0	.13 3.2	0.06 2	1.5630 39.716	1.5621 39.696	+0/-.0005 +0/-.013	.27 .12
MR 31	MI 26 2S		1.6250 41.291	+0/-.0005 +0/-.013	1.936 49.2	+0/-.0007 +0/-.018	1.260 32.0	.13 3.2	.06 1.5	1.6255 41.304	1.6246 41.284	+0/-.0005 +0/-.013	.30 .14
MR 32 N	MI 26 N		1.6250 41.291	+0/-.0005 +0/-.013	1.999 50.8	+0/-.0007 +0/-.018	1.010 25.7	.13 3.2	.06 1.5	1.6255 41.304	1.6246 41.284	+0/-.0005 +0/-.013	.30 .14
MR 32 SS, S, RS, SRS, RSS	MI 25		1.5625 39.703	+0/-.0005 +0/-.013	1.999 50.8	+0/-.0007 +0/-.018	1.260 32.0	.13 3.2	.06 1.5	1.5630 39.716	1.5621 39.696	+0/-.0005 +0/-.013	.30 .14
MR 32	MI 26	MS 500072-23	1.6250 41.291	+0/-.0005 +0/-.013	1.999 50.8	+0/-.0007 +0/-.018	1.260 32.0	.13 3.2	.06 1.5	1.6255 41.304	1.6246 41.284	+0/-.0005 +0/-.013	.38 .17
	MI 27		1.6875 42.879	+0/-.0005 +0/-.013	1.999 50.8	+0/-.0007 +0/-.018	1.260 32.0	.13 3.2	.06 1.5	1.6880 42.892	1.6871 42.872	+0/-.0005 +0/-.013	.32 .15
MR 36 N	MI 28 N	MS 500072-24	1.7500 44.468	+0/-.0005 +0/-.013	2.249 57.1	+0/-.0007 +0/-.018	1.510 38.4	.19 4.8	.06 1.5	1.7505 44.480	1.7496 44.460	+0/-.0005 +0/-.013	.63 .29
MR 36 SS, S, RS, SRS, RSS	MI 28	MS 500072-25	1.750 44.5	+0/-.0005 +0/-.013	2.249 57.1	+0/-.0007 +0/-.018	1.760 44.7	0.19 5	0.06 2	1.7505 44.480	1.7497 44.460	+0/-.0005 +0/-.013	.74 .34
	MI 30		1.8750 47.644	+0/-.0005 +0/-.013	2.249 57.1	+0/-.0007 +0/-.018	1.760 44.7	0.19 5	0.06 2	1.8755 47.656	1.8746 47.636	+0/-.0005 +0/-.013	.85 .39

Not all parts are available from stock. Please contact customer service for availability (800) 626-2120.
For more information on bearing capabilities outside of our standard offering, please contact Application Engineering (800) 626-2093.

McGILL® CAGEROL® Bearings

Basic Construction Type: Machined Race With Optional Separable Inner Ring

Rolling Elements: Cage Guided Precision Needles

Bearing Material: Bearing Quality Steel

Seal Type: Rubber Lip

Lubrication: Sealed Bearings: Lithium Soap Grease NLGI #1 Unsealed Bearings: Rust Preventative

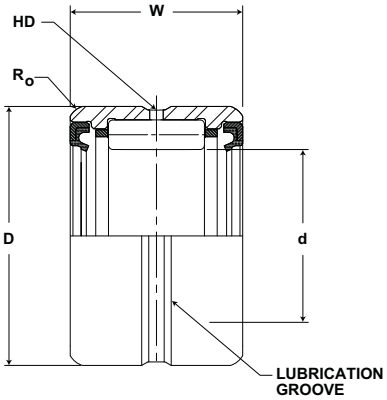

MR SERIES (continued)

Part No.		d		D		W	Housing Bore Diameter			HD	Ro	Limiting Speed (In Oil)*	Basic Dynamic Rating	Basic Static Rating	Outer & Roller Assembly Weight
McGill Outer Ring & Roller Assembly	Military No.	Shaft Diameter		Outside Diameter		Width				Radial Lub. Hole Diameter	Max Hsg Radius to Clear				
		inch mm		inch mm		inch mm	inch mm			inch mm		RPM	lb/N	lb/N	lb kg
		Nom	Tol.	Nom	Tol.	Tol +0/-.005 (+0/.13)	Rotating	Stationary	Tol.	(Ref)	(Ref)				
MR 40 N	MS 51961-33	2.5000 63.5	+0/-.0005 +0/-.013	3.2500 82.6	+0/-.0008 +0/-.020	1.500 38.10	3.2496 82.572	3.2507 82.600	+0/-.0007 +0/-.018	.13 3	0.08 2	4800	23,400 104,083	42,900 190,819	1.23 .56
MR 40 SS, S, RS, SRS, RSS						1.750 44.45	3.2496 83	3.2507 83	+0/-.0007 +0/-.018	.13 3	0.08 2	1530	23,400 104,083	42,900 190,819	1.44 .65
MR 40	MS 51961-34						3.2496 83	3.2507 83	+0/-.0007 +0/-.018	.13 3	0.08 2	4800	27,200 120,986	52,100 231,741	1.44 .65
MR 40	MS 51961-34						3.2496 83	3.2507 83	+0/-.0007 +0/-.018	.13 3	0.08 2	4800	27,200 120,986	52,100 231,741	1.44 .65
MR 44 N	MS 51961-35	2.7500 69.9	+0/-.0005 +0/-.013	3.5000 88.9	+0/-.0008 +0/-.020	1.500 38.10	3.4995 89	3.5008 89	+0/-.0010 +0/-.025	.13 3	0.08 2	4370	24,500 108,976	46,700 207,722	1.36 .62
MR 44 SS, S, RS, SRS, RSS						1.750 44.45	3.4995 89	3.5008 89	+0/-.0010 +0/-.025	.13 3	0.08 2	1390	24,500 108,976	46,700 207,722	1.59 .72
MR 44	MS 51961-36						3.4995 89	3.5008 89	+0/-.0010 +0/-.025	.13 3	0.08 2	4370	28,400 126,323	56,700 252,202	1.59 .72
MR 48 N	MS 51961-37	3.0000 76.2	+0/-.0005 +0/-.013	3.7500 95.3	+0/-.0008 +0/-.020	1.500 38.10	3.7495 95.275	3.7508 95.308	+0/-.0010 +0/-.025	.13 3	0.08 2	4000	26,100 116,093	52,300 232,630	1.53 .69
MR 48 SS, S, RS, SRS, RSS						1.750 44.45	3.7495 95	3.7508 95	+0/-.0010 +0/-.025	.13 3	0.08 2	1270	26,100 116,093	52,300 232,630	1.79 .77
MR 48	MS 51961-38						3.7495 95	3.7508 95	+0/-.0010 +0/-.025	.13 3	0.08 2	4000	30,300 134,774	63,400 282,003	1.79 .77
	MS 51961-38						3.7495 95	3.7508 95	+0/-.0010 +0/-.025	.13 3	0.08 2	4000	30,300 134,774	63,400 282,003	1.79 .77
† MR 52 SS, S, RS, SRS, RSS		3.2500 82.6	+0/-.0005 +0/-.013	4.2500 108.0	+0/-.0008 +0/-.020	1.750 44.45	4.2495 107	4.2508 108	+0/-.0010 +0/-.025	.19 5	0.08 2	1175	25,100 111,645	54,300 241,526	2.64 1.19
MR 52	MS 51961-39						4.2495 108	4.2508 108	+0/-.0010 +0/-.025	.19 5	0.08 2	3700	29,900 132,995	64,400 286,451	2.64 1.19
MR 56 N	MS 51961-41	3.5000 88.9	+0/-.0005 +0/-.013	4.5000 114.3	+0/-.0008 +0/-.020	1.750 44.45	4.4995 114	4.5008 114	+0/-.0010 +0/-.025	.19 5	0.08 2	3440	31,300 139,222	71,600 318,477	2.88 1.31
MR 56 SS, S, RS, SRS, RSS						2.000 50.80	4.4995 114	4.5008 114	+0/-.0010 +0/-.025	.19 5	0.08 2	1090	31,300 139,222	71,600 318,477	3.18 1.44
MR 56	MS 51961-42						4.4995 114	4.5008 114	+0/-.0010 +0/-.025	.19 5	0.08 2	3440	35,900 159,683	83,500 371,408	3.18 1.44
	MS 51961-42						4.4995 114	4.5008 114	+0/-.0010 +0/-.025	.19 5	0.08 2	3440	35,900 159,683	83,500 371,408	3.18 1.44
† MR 60 SS, S, RS, SRS, RSS		3.7500 95.3	+0/-.0005 +0/-.013	4.7500 120.7	+0/-.0008 +0/-.020	2.000 50.80	4.7495 121	4.7508 121	+0/-.0010 +0/-.025	.19 5	0.10 3	1020	31,600 140,557	74,700 332,266	3.38 1.53
MR 60	MS 51961-43						4.7495 121	4.7508 121	+0/-.0010 +0/-.025	.19 5	0.10 3	3200	36,500 162,352	87,100 387,421	3.38 1.53
† MR 64 SS, S, RS, SRS, RSS		4.0000 101.6	+0/-.0007 +0/-.018	5.0000 127.1	+0/-.0010 +0/-.025	2.000 50.80	4.9999 127	5.0011 127	+0/-.0015 +0/-.038	.19 5	0.10 3	950	32,000 142,336	80,400 357,619	3.56 1.61
MR 64	MS 51961-45						4.9999 127	5.0011 127	+0/-.0015 +0/-.038	.19 5	0.10 3	3000	38,000 169,024	93,800 417,222	3.56 1.61

For sealed bearings, Outside diameter may be slightly oversize due to seal press fit.
For DS matching as DS suffix to part number
* For bearing properly filled with #1 grease reduce speed by 50%
† Not available from stock. Consult McGill customer service for availability.

Metric dimensions for reference only.
Not all parts are available from stock. Please contact customer service for availability (800) 626-2120.
For more information on bearing capabilities outside of our standard offering, please contact Application Engineering (800) 626-2093.

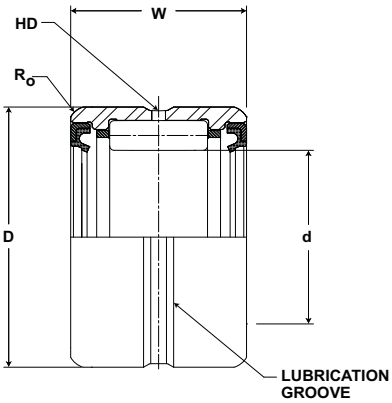

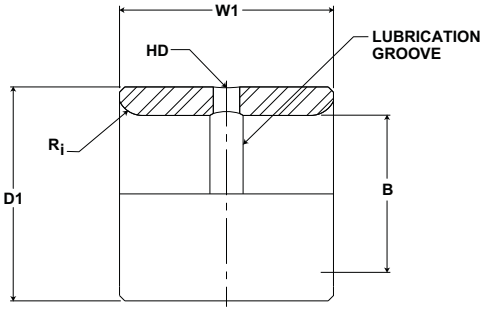

MR SERIES (continued)

Part No.		Military No.	B		D1		W1	HD	Ri	Recommended Shaft Diameter with inner ring			Inner Weight
McGill Outer Ring & Roller Assembly	Separable Inner Ring Only		Bore Diameter		Outside Diameter		Width	Radial Lub. Hole Diameter	Max Shaft Radius to Clear				
			inch mm		inch mm		inch mm			inch mm			lb kg
			Nom	Tol.	Nom	Tol.	Tol +0/-.005 (+0/.13)	(Ref)	(Ref)	Rotating	Stationary	Tol.	
MR 40 N	MI 32 N	MS 500072-27	2.0000 50.820	+0/-.0005 +0/-.013	2.249 57.1	+0/-.0007 +0/-.018	1.510 38.4	.19 4.8	.08 2.0	2.0005 50.833	1.9996 50.812	+0/-.0005 +0/-.013	.74 .34
MR 40 SS, S, RS, SRS, RSS	MI 31	MS 500072-26	1.9375 49.232	+0/-.0005 +0/-.013	2.249 57.1	+0/-.0007 +0/-.018	1.510 38.4	.19 4.8	.08 2.0	1.9380 49.245	1.9371 49.224	+0/-.0005 +0/-.013	.97 .44
	MI 32		2.0000 50.820	+0/-.0005 +0/-.013	2.249 57.1	+0/-.0007 +0/-.018	1.760 44.7	.19 4.8	.08 2.0	2.0005 50.833	1.9996 50.812	+0/-.0005 +0/-.013	.87 .39
	MI 34		2.1250 53.996	+0/-.0006 +0/-.015	2.249 57.1	+0/-.0007 +0/-.018	1.760 44.7	.19 4.8	.08 2.0	2.1258 54.017	2.1247 53.989	+0/-.0008 +0/-.020	1.00 .45
MR 44 N	MI 36 N	MS 500072-29	2.2500 57.173	+0/-.0006 +0/-.015	2.749 69.8	+0/-.0007 +0/-.018	1.510 38.4	.19 4.8	.08 2.0	2.2508 57.193	2.2497 57.165	+0/-.0008 +0/-.020	.83 .37
MR 44 SS, S, RS, SRS, RSS	MI 35	MS 500072-28	2.1875 55.584	+0/-.0006 +0/-.015	2.749 69.8	+0/-.0007 +0/-.018	1.510 38.4	0.19 5	0.08 2	2.1883 55.605	2.1872 55.577	+0/-.0008 +0/-.020	1.06 .48
	MI 36		2.2500 57.173	+0/-.0006 +0/-.015	2.749 69.8	+0/-.0007 +0/-.018	1.760 44.72	0.19 5	0.08 2	2.2508 57.193	2.2497 57.165	+0/-.0008 +0/-.020	.97 .44
MR 48 N	MI 40 N	MS 500072-31	2.5000 63.525	+0/-.0006 +0/-.015	2.9989 76.202	+0/-.0007 +0/-.018	1.510 38.37	.19 4.8	.08 2.0	2.5008 63.545	2.4997 63.517	+0/-.0008 +0/-.020	.92 .43
MR 48 SS, S, RS, SRS, RSS	MI 38	MS 500072-30	2.3750 60.349	+0/-.0006 +0/-.015	2.9989 76.202	+0/-.0007 +0/-.018	1.760 44.72	.19 4.8	.08 2.0	2.3758 60.369	2.3747 60.341	+0/-.0008 +0/-.020	1.28 .58
	MI 39		2.4375 61.937	+0/-.0006 +0/-.015	2.9989 76.202	+0/-.0007 +0/-.018	1.510 38.37	.19 4.8	.08 2.0	2.4383 61.957	2.4372 61.929	+0/-.0008 +0/-.020	1.05 .47
	MI 40		2.5000 63.525	+0/-.0006 +0/-.015	2.9989 76.202	+0/-.0007 +0/-.018	1.760 44.72	.19 4.8	.08 2.0	2.5008 63.545	2.4997 63.517	+0/-.0008 +0/-.020	1.07 .48
† MR 52 SS, S, RS, SRS, RSS	MI 42		2.6250 66.701	+0/-.0006 +0/-.015	3.2487 82.549	+0/-.0009 +0/-.023	1.760 44.72	.19 4.8	0.08 2	2.6258 66.722	2.6247 66.694	+0/-.0008 +0/-.020	1.12 .51
MR 52	MI 44	MS 500072-32	2.7500 69.878	+0/-.0006 +0/-.015	3.2487 82.549	+0/-.0009 +0/-.023	1.760 44.72	0.19 5	0.08 2	2.7508 69.898	2.7497 69.870	+0/-.0008 +0/-.020	1.17 .53
MR 56 N	MI 48 N		3.0000 76.230	+0/-.0006 +0/-.015	3.4987 88.902	+0/-.0009 +0/-.023	1.760 44.72	.25 6.4	.08 2.0	3.0008 76.250	2.9997 76.222	+0/-.0008 +0/-.020	1.32 .59
MR 56 SS, S, RS, SRS, RSS	MI 46		2.8750 73.054	+0/-.0006 +0/-.015	3.4987 88.902	+0/-.0009 +0/-.023	2.010 51.07	0.25 6	0.08 2	2.8758 73.074	2.8747 73.046	+0/-.0008 +0/-.020	1.30 .59
MR 56	MI 47	MS 500072-34	2.9375 74.642	+0/-.0006 +0/-.015	3.4987 88.902	+0/-.0009 +0/-.023	2.010 51.07	0.25 6	0.08 2	2.9383 74.662	2.9372 74.634	+0/-.0008 +0/-.020	1.58 .72
	MI 48		3.0000 76.230	+0/-.0006 +0/-.015	3.4987 88.902	+0/-.0009 +0/-.023	2.010 51.07	0.25 6	0.08 2	3.0008 76.250	2.9997 76.222	+0/-.0008 +0/-.020	1.43 .65
† MR 60 SS, S, RS, SRS, RSS	MI 50	MS 500072-35	3.1250 79.406	+0/-.0006 +0/-.015	3.7487 95.254	+0/-.0009 +0/-.023	2.010 51.07	.25 6.4	.10 2.5	3.1260 79.432	3.1246 79.396	+0/-.0010 +0/-.025	1.88 .85
	MI 52	MS 500072-36	3.2500 82.583	+0/-.0006 +0/-.015	3.7487 95.254	+0/-.0009 +0/-.023	2.010 51.07	0.25 6.4	0.10 2.5	3.2510 82.608	3.2496 82.572	+0/-.0010 +0/-.025	1.52 .69
† MR 64 SS, S, RS, SRS, RSS	MI 54	MS 500072-38	3.3750 85.759	+0/-.0008 +0/-.020	3.9985 101.602	+0/-.0009 +0/-.023	2.010 51.07	.25 6.4	.10 2.5	3.3760 85.784	3.3746 85.749	+0/-.0010 +0/-.025	2.04 .93
	MI 56		3.5000 88.935	+0/-.0008 +0/-.020	3.9985 101.602	+0/-.0009 +0/-.023	2.010 51.07	0.25 6.4	0.10 2.5	3.5010 88.960	3.4996 88.925	+0/-.0010 +0/-.025	1.63 .74

† Not available from stock. Consult McGill customer service for availability.

McGILL® CAGEROL® Bearings

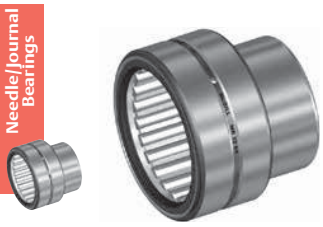

Basic Construction Type: Machined Race With Optional Separable Inner Ring

Rolling Elements: Cage Guided Precision Needles

Bearing Material: Bearing Quality Steel

Seal Type: Rubber Lip

Lubrication: Sealed Bearings: Lithium Soap Grease NLGI #1 Unsealed Bearings: Rust Preventative

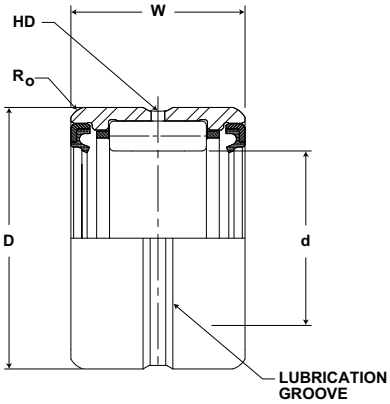

MR SERIES (continued)

Part No.		d		D		W	Housing Bore Diameter			HD	Ro	Limiting Speed (In Oil)*	Basic Dynamic Rating	Basic Static Rating	Outer & Roller Assembly Weight
McGill Outer Ring & Roller Assembly	Military No.	Shaft Diameter		Outside Diameter		Width				Radial Lub. Hole Diameter	Max Hsg Radius to Clear				
		inch mm		inch mm		inch mm	inch mm			inch mm		RPM	lb/N	lb/N	lb kg
		Nom	Tol.	Nom	Tol.	Tol +0/-.005 (+0/.13)	Rotating	Stationary	Tol.	(Ref)	(Ref)				
† MR 68 SS, S, RS, SRS, RSS		4.2500 108.0	+0/-.0007 +0/-.018	5.2500 133.4	+0/-.0010 +0/-.025	2.000 50.80	5.2499 133	5.2511 133	+0/-.0015 +0/-.038	.19 5	0.10 3	900	34,000 151,232	86,200 383,418	3.74 1.69
MR 68	MS 51961-46						5.2499 133	5.2511 133	+0/-.0015 +0/-.038	.19 5	0.10 3	2820	39,500 175,696	101,000 449,248	3.74 1.69
MR 72	MS 51961-48	4.5000 114.3	+0/-.0007 +0/-.018	6.0000 152.5	+0/-.0010 +0/-.025	2.250 57.15	5.9999 152	6.0011 152	+0/-.0015 +0/-.038	.19 5	0.10 3	2660	60,300 268,214	130,000 578,240	7.13 3.23
MR 80		5.0000 127.1	+0/-.0007 +0/-.018	6.5000 165.2	+0/-.0010 +0/-.025	2.250 57.15	6.4999 165	6.5011 165	+0/-.0015 +0/-.038	.19 5	0.10 3	800	64,600 287,341	148,000 658,304	7.78 3.53
MR 88 N	MS 51961-52	5.5000 139.8	+0/-.0007 +0/-.018	7.0000 177.9	+0/-.0010 +0/-.025	2.500 63.50	6.9999 178	7.0011 178	+0/-.0015 +0/-.038	.25 6	0.10 3	2180	70,200 312,250	169,800 755,270	10.40 4.72
MR 88	MS 51961-53					3.000 76.20	6.9999 178	7.0011 178	+0/-.0015 +0/-.038	.25 6	0.10 3	2180	85,700 381,194	222,000 987,456	11.82 5.36
MR 96 N	MS 51961-55	6.0000 152.5	+0/-.0010 +0/-.025	7.5000 190.6	+0/-.0012 +0/-.030	2.500 63.50	7.4998 190	7.5011 190	+0/-.0015 +0/-.038	.25 6	0.12 3	2000	71,000 315,808	177,000 787,296	11.08 5.02
MR 96	MS 51961-56					3.000 76.20	7.4998 190	7.5011 190	+0/-.0015 +0/-.038	.25 6	0.12 3	2000	86,600 385,197	228,000 1,014,144	12.69 5.76
MR 104 N	MS 51961-57	6.5000 165.2	+0/-.0010 +0/-.025	8.0000 203.3	+0/-.0012 +0/-.030	2.500 63.50	7.9998 203	8.0011 203	+0/-.0015 +0/-.038	.25 6	0.12 3	1850	71,700 318,922	183,000 813,984	11.85 5.37
† MR 104	MS 51961-58					3.000 76.20	7.9998 203	8.0011 203	+0/-.0015 +0/-.038	.25 6	0.12 3	1850	87,500 389,200	237,000 1,054,176	13.55 6.15
MR 116	MS 51961-59	7.2500 184.2	+0/-.0010 +0/-.025	9.1250 231.9	+0/-.0012 +0/-.030	3.000 76.20	9.1248 231	9.1261 231	+0/-.0015 +0/-.038	.25 6	0.12 3	1680	95,200 423,450	234,000 1,040,832	19.32 8.76
† MR 124		7.7500 196.9	+0/-.0010 +0/-.025	9.6250 244.6	+0/-.0012 +0/-.030	3.000 76.20	9.6250 244	9.6265 244	+0/-.0020 +0/-.051	.25 6	0.12 3	1530	99,100 440,797	252,000 1,120,896	19.80 8.97
† MR 132		8.2500 209.6	+0/-.0010 +0/-.025	10.1250 257.3	+0/-.0012 +0/-.030	3.000 76.20	10.1250 257	10.1265 257	+0/-.0020 +0/-.051	.25 6	0.12 3	1460	103,000 458,144	270,000 1,200,960	21.63 9.81
† MR 140		8.7500 222.3	+0/-.0010 +0/-.025	10.6250 270.0	+0/-.0014 +0/-.036	3.000 76.20	10.6250 269	10.6265 270	+0/-.0020 +0/-.051	.25 6	0.16 4	1370	104,000 462,592	280,000 1,245,440	22.73 10.31
MR 148		9.2500 235.0	+0/-.0010 +0/-.025	11.1250 282.7	+0/-.0014 +0/-.036	3.000 76.20	11.1250 282	11.1265 282	+0/-.0020 +0/-.051	.25 6	0.16 4	1300	108,000 480,384	292,000 1,298,816	24.90 10.88

For sealed bearings, Outside diameter may be slightly oversize due to seal press fit.
For DS matching as DS suffix to part number
* For bearing properly filled with #1 grease reduce speed by 50%
† Not available from stock. Consult McGill customer service for availability.

Metric dimensions for reference only.
Not all parts are available from stock. Please contact customer service for availability (800) 626-2120.
For more information on bearing capabilities outside of our standard offering, please contact Application Engineering (800) 626-2093.

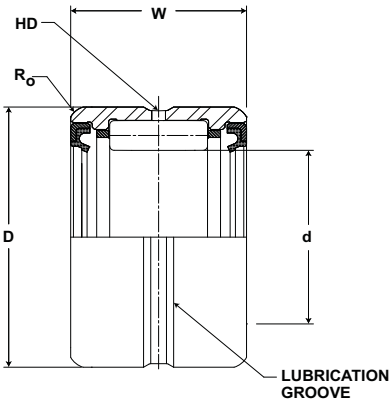

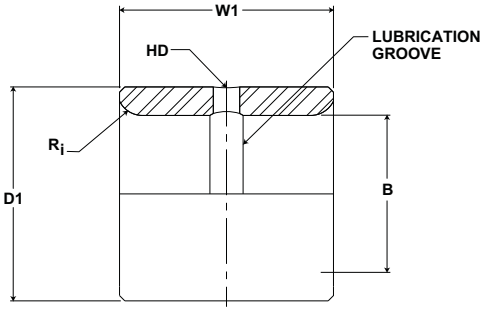

MR SERIES (continued)

Part No.		Military No.	B		D1		W1	HD	Ri	Recommended Shaft Diameter with inner ring			Inner Weight
McGill Outer Ring & Roller Assembly	Separable Inner Ring Only		Bore Diameter		Outside Diameter		Width	Radial Lub. Hole Diameter	Max Shaft Radius to Clear				
			inch mm		inch mm		inch mm			inch mm			lb kg
			Nom	Tol.	Nom	Tol.	Tol +0/-.005 (+0/.13)	(Ref)	(Ref)	Rotating	Stationary	Tol.	
† MR 68 SS, S, RS, SRS, RSS	MI 58		3.6250 92.111	+0/-.0008 +0/-.020	4.2485 107.954	+0/-.0009 +0/-.023	2.010 51.07	.25 6.4	0.10 3	3.6260 92.137	3.6246 92.101	+0/-.0010 +0/-.025	1.70 .77
MR 68	MI 60	MS 500072-40	3.7500 95.288	+0/-.0008 +0/-.020	4.2485 107.954	+0/-.0009 +0/-.023	2.010 51.07	0.25 6	0.10 3	3.7510 95.313	3.7496 95.277	+0/-.0010 +0/-.025	1.75 .79
MR 72	MI 62		3.8750 98.464	+0/-.0008 +0/-.020	4.4985 114.307	+0/-.0009 +0/-.023	2.260 57.43	.25 6.4	.10 2.5	3.8760 98.489	3.8746 98.454	+0/-.0010 +0/-.025	3.25 1.47
MR 80	MI 64		4.0000 101.640	+0/-.0008 +0/-.020	4.9985 127.012	+0/-.0010 +0/-.025	2.260 57.43	.25 6.4	0.10 3	4.0010 101.665	3.9996 101.630	+0/-.0010 +0/-.025	4.38 1.99
	MI 68		4.2500 107.993	+0/-.0008 +0/-.020	4.9985 127.012	+0/-.0010 +0/-.025	2.260 57.43	0.25 6	0.10 3	4.2510 108.018	4.2496 107.982	+0/-.0010 +0/-.025	5.24 2.37
MR 88 N	MI 72 N	MS 500072-43	4.5000 114.345	+0/-.0008 +0/-.020	5.4985 139.717	+0/-.0010 +0/-.025	2.515 63.91	.25 6.4	0.10 3	4.5010 114.370	4.4996 114.332	+0/-.0010 +0/-.025	5.43 2.47
MR 88	MI 72	MS 500072-44	4.5000 114.345	+0/-.0008 +0/-.020	5.4985 139.717	+0/-.0010 +0/-.025	3.015 76.61	0.25 6	0.10 3	4.5010 114.370	4.4995 114.332	+0/-.0010 +0/-.025	5.97 2.71
MR 96 N	MI 80 N	MS 500072-46	5.0000 127.050	+0/-.0010 +0/-.025	5.9983 152.417	+0/-.0010 +0/-.025	2.515 63.91	.31 7.9	0.12 3	5.0010 127.075	4.9995 127.037	+0/-.0010 +0/-.025	5.97 2.71
MR 96	MI 80	MS 500072-47	5.0000 127.050	+0/-.0010 +0/-.025	5.9983 152.417	+0/-.0010 +0/-.025	3.015 76.61	0.31 8	0.12 3	5.0010 127.075	4.9995 127.037	+0/-.0010 +0/-.025	7.12 3.23
MR 104 N	MI 88 N	MS 500072-48	5.5000 139.755	+0/-.0010 +0/-.025	6.4983 165.122	+0/-.0010 +0/-.025	2.515 63.91	.31 7.9	0.12 3	5.5010 139.780	5.4995 139.742	+0/-.0010 +0/-.025	6.30 2.88
† MR 104	MI 88	MS 500072-49	5.5000 139.755	+0/-.0010 +0/-.025	6.4983 165.122	+0/-.0010 +0/-.025	3.015 76.61	0.31 8	0.12 3	5.5010 139.780	5.4995 139.742	+0/-.0010 +0/-.025	7.56 3.43
MR 116	MI 96	MS 500072-50	6.0000 152.460	+0/-.0010 +0/-.025	7.2481 184.174	+0/-.0012 +0/-.030	3.015 76.61	.31 7.9	.12 3.0	6.0012 152.490	5.9995 152.447	+0/-.0012 +0/-.030	11.06 5.03
† MR 124	MI 104		6.5000 165.165	+0/-.0010 +0/-.025	7.7481 196.879	+0/-.0012 +0/-.030	3.015 76.61	.31 7.9	.12 3.0	6.5012 165.195	6.4995 165.152	+0/-.0012 +0/-.030	11.99 5.39
† MR 132	MI 112		7.0000 177.870	+0/-.0010 +0/-.025	8.2481 209.584	+0/-.0012 +0/-.030	3.015 76.61	.31 7.9	.12 3.0	7.0012 177.900	6.9995 177.857	+0/-.0012 +0/-.030	12.70 5.77
† MR 140	MI 120		7.5000 190.575	+0/-.0012 +0/-.030	8.7480 222.287	+0/-.0012 +0/-.030	3.015 76.61	.31 7.9	.16 4.1	7.5012 190.605	7.4995 190.562	+0/-.0012 +0/-.030	13.60 6.17
† MR 148	MI 128		8.0000 203.280	+0/-.0012 +0/-.030	9.2480 234.992	+0/-.0012 +0/-.030	3.015 76.61	.31 7.9	.16 4.1	8.0012 203.310	7.9995 203.267	+0/-.0012 +0/-.030	14.40 6.55

† Not available from stock. Consult McGill customer service for availability.

McGill GUIDEROL® Bearings

McGill GUIDEROL® machined race full complement needle bearings are manufactured from bearing quality steel with unique roller and race design to provide center-guided rolling elements for higher radial load capacity and is well suited for oscillating applications. GUIDEROL® bearings are constructed with radial lubrication hole and groove on the outer and optional inner raceway (MI-series) for relubrication through the housing or shaft. Other options include a variety of seal configurations to either help prevent contaminant entry or contain the lubricant. Depending on your preference, these bearings are available in a wide variety of sizes and sealing options as illustrated on the pages to follow.

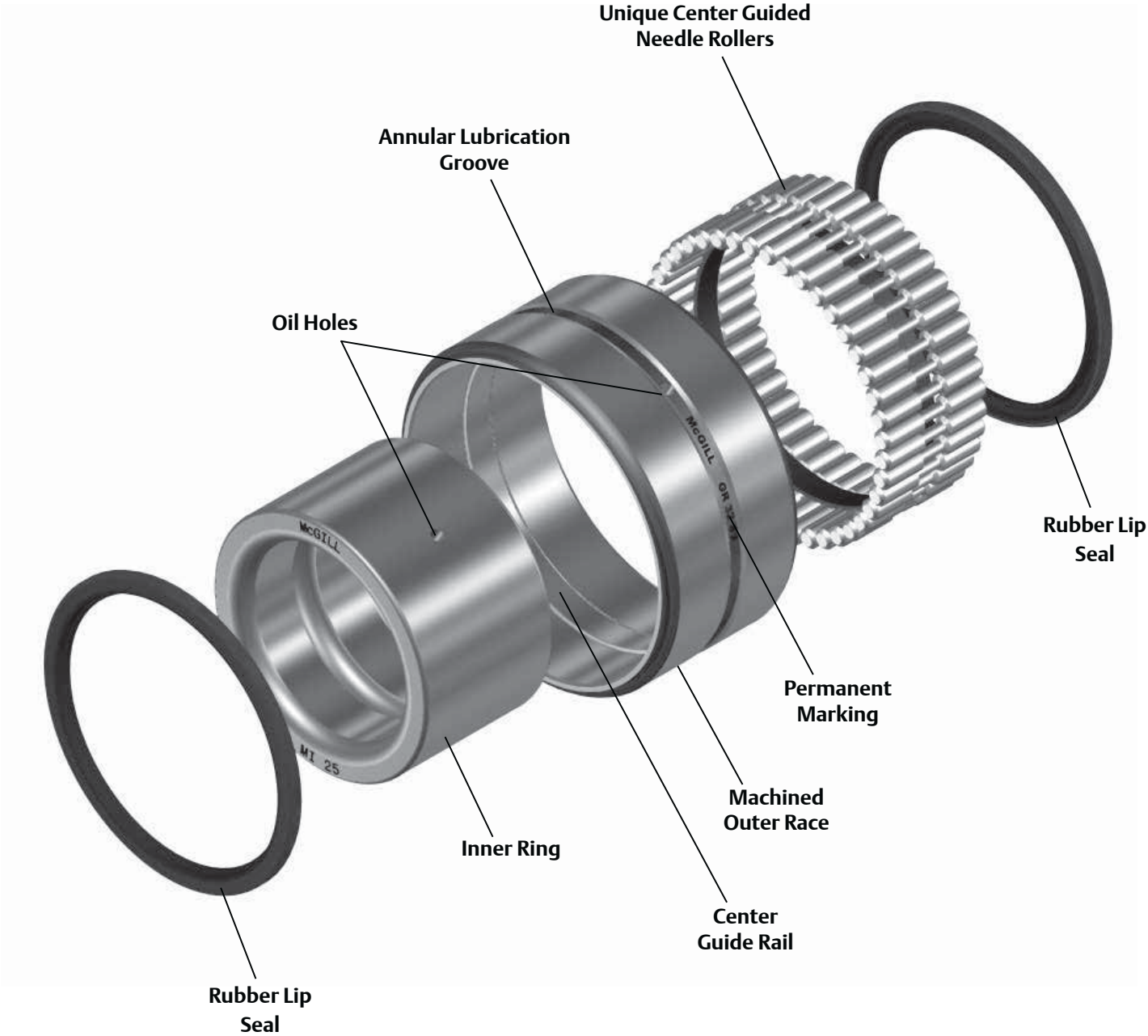

GUIDEROL® Nomenclature

GR 18 N S DS

Basic Type
GR - GUIDEROL® Bearing

Series Identifier
18 / 16 = 1.125” Bore Diameter

Optional Suffix
N - Narrow Width (Unsealed Only)
Typically .25” Narrower

Sealing
S - Single Seal With Lip Turned In
SS - Double Seal With Both Seal Lips Turned In
RSS – Double Seal With Both Seal Lips Turned Out
RS – Single Seal With Lip Turned Out
SRS – Double Seal With One Lip Turned In And One Lip Turned Out

Optional Suffix
DS - Matched Pair For Duplex Mounting

Inner Ring

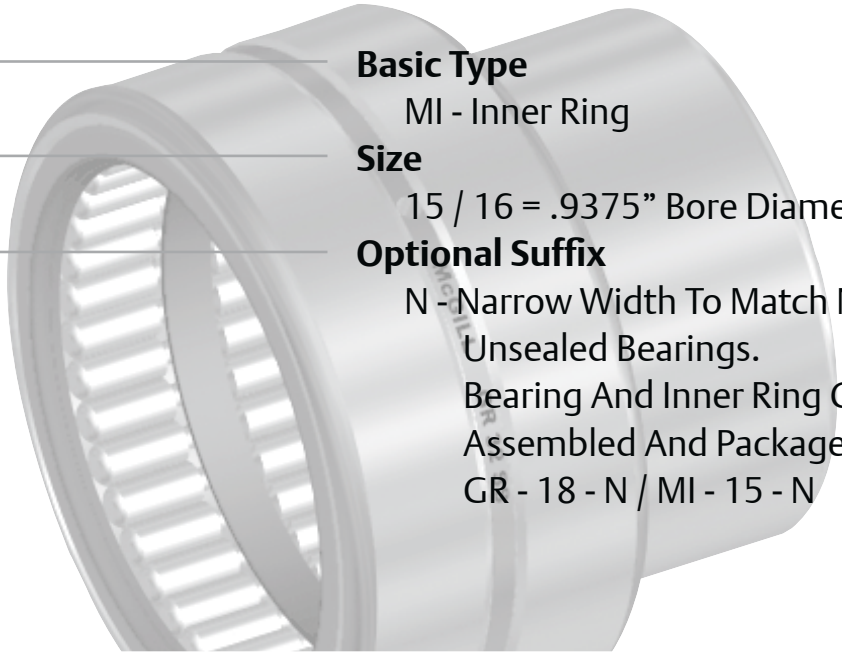

MI 15 N

Basic Type
MI - Inner Ring

Size
15 / 16 = .9375” Bore Diameter

Optional Suffix
N - Narrow Width To Match Narrow Unsealed Bearings.
Bearing And Inner Ring Can Be Assembled And Packaged Together:
GR - 18 - N / MI - 15 - N

Features and Benefits

Machined Outer Race

Race manufactured from bearing quality steel and hardened to carry heavy dynamic and static loads.

Unique Center Guided Needle Rollers

Centered guided rollers designed to fit a mating guide rail and allow for maximum width of roller within the bearing.

Retaining Ring and Center Rail

Provides retention of needle rollers and helps guide rollers to prevent skewing.

Annular Lubrication Groove

The groove provides a circumferential path to direct lubricant to the oil hole, when lubricating through the housing.

Factory Grease Fill

The sealed GUIDEROL® bearings are factory lubricated with a medium temperature (-30° to 250°F, -34° to 121° C) NLGI 1 grease, unsealed bearings packaged with light oil film as a rust preventative. Contact Application Engineering when application conditions require special lubricants.

Options

Seals

The rubber lip seal is capable of 250° F maximum temperature and is available in several different configurations on bearings capable being sealed.

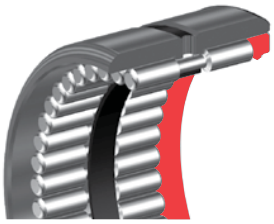

S

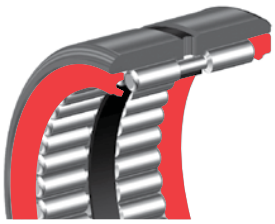

SS

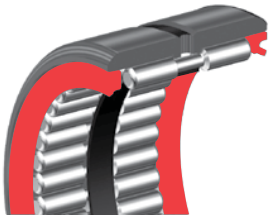

RS

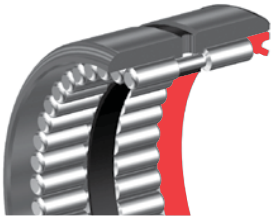

RSS

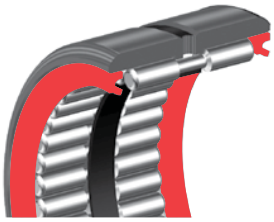

SRS

"DS" Matched Bearings – Load Sharing

When two bearings are installed with the distance between both bearing less than the width of one bearing, it is recommended the bearings be diametrically matched to prevent unequal load sharing. The option matches OD and ID tolerances, diametrical clearance within 30% of the tolerance range and the radial runout within 20% of the tolerance range with high point of runout indicated on the bearing faces. For more information and matching factors please review the engineering section for matched bearings. Matched bearings are packaged as sets, but can be used individually if desired.

Machined Inner Ring (MI)

Precision ground inner ring provides a hardened raceway for the rollers when used with an unhardened shaft. The ring contains an oil hole and annular groove for relubrication of the bearing and can be used with both CAGEROL and GUIDEROL bearings or can be utilized as a bushing in plain bearing applications.

Grease Options

When requested, standard bearings can be factory filled with customer specified lubricant.

McGILL® GUIDEROL® Bearings

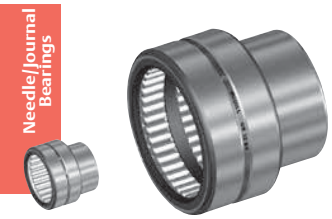

Basic Construction Type: Machined Race with full Complement of Needles

Rolling Elements: Center Guided Precision Needles

Bearing Material: Bearing Quality Steel

Seal Type: Rubber Lip

Lubrication: Sealed Bearings: Lithium Soap Grease NLGI #1
Unsealed Bearings: Rust Preventative

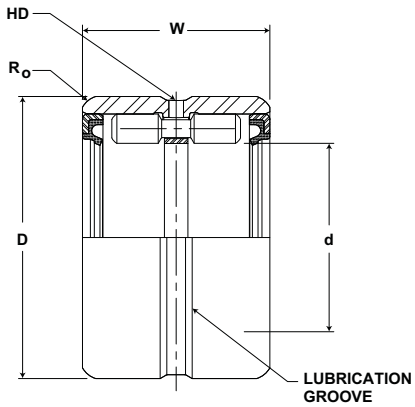

GR SERIES

Part No.	d		D		W	Housing Bore Diameter			HD	Ro	Limiting Speed (In Oil)*	Basic Dynamic Rating	Basic Static Rating	Outer & Roller Assembly Weight
Outer Ring & Roller Assembly	Shaft Diameter		Outside Diameter		Width				Radial Lub. Hole Diameter	Max Hsg Radius to Clear				
	inch mm		inch mm		inch mm	inch mm			inch mm		RPM	lb/N	lb/N	lb kg
	Nom	Tol.	Nom	Tol.	Tol +0/-.005 (+0/.13)	Rotating	Stationary	Tol.	(Ref)	(Ref)				
GR 8 N	.5000 12.7	+0/-.0005 +0/-.013	1.0000 25.4	+0/-.0005 +0/-.013	.750 19.05	0.9997 25.402	1.0070 25.588	+0/-.0007 +0/-.018	.08 2	0.03 1	TBD	2,600 11,565	4,500 20,016	.12 .05
GR 10 N	.6250 15.9	+0/-.0005 +0/-.013	1.1250 28.6	+0/-.0005 +0/-.013	.750 19.05	1.1247 28.579	1.1257 28.604	+0/-.0007 +0/-.018	.08 2	0.03 1	9,600	3,400 15,123	6,400 28,467	.12 .05
						1.1247 28.579	1.1257 28.604	+0/-.0007 +0/-.018	.08 2	0.03 1	9,600	3,400 15,123	6,400 28,467	.12 .05
GR 10 SS, S, RS, SRS, RSS					1.000 25.40	1.1247 28.579	1.1257 28.604	+0/-.0007 +0/-.018	.08 2	0.03 1	6,100	3,400 15,123	6,400 28,467	.15 .07
GR 10						1.1247 28.579	1.1257 28.604	+0/-.0007 +0/-.018	.08 2	0.03 1	9,600	4,700 20,906	9,100 40,477	.15 .07
GR 12 N	.7500 19.1	+0/-.0005 +0/-.013	1.2500 31.8	+0/-.0005 +0/-.013	.750 19.05	1.2497 31.755	1.2507 31.780	+0/-.0007 +0/-.018	.08 2	0.04 1	8,000	3,700 16,458	7,200 32,026	.14 .06
						1.2497 31.755	1.2507 31.780	+0/-.0007 +0/-.018	.08 2	0.04 1	8,000	3,700 16,458	7,200 32,026	.14 .06
GR 12 SS, S, RS, SRS, RSS					1.000 25.40	1.2497 31.755	1.2507 31.780	+0/-.0007 +0/-.018	.08 2	0.04 1	5,100	3,700 16,458	7,200 32,026	.17 .08
GR 12						1.2497 31.755	1.2507 31.780	+0/-.0007 +0/-.018	.08 2	0.04 1	8,000	5,100 22,685	10,900 48,483	.17 .08
GR 14 N	.8750 22.2	+0/-.0005 +0/-.013	1.3750 34.9	+0/-.0005 +0/-.013	.750 19.05	1.3747 34.931	1.3757 34.957	+0/-.0007 +0/-.018	.08 2	0.04 1	6,800	4,150 18,459	8,400 37,363	.16 .07
						1.3747 34.931	1.3757 34.957	+0/-.0007 +0/-.018	.08 2	0.04 1	6,800	4,150 18,459	8,400 37,363	.16 .07
GR 14 SS, S, RS, SRS, RSS					1.000 25.40	1.3747 34.931	1.3757 34.957	+0/-.0007 +0/-.018	.08 2	0.04 1	4,400	4,150 18,459	8,400 37,363	.21 .09
GR 14						1.3747 34.931	1.3757 34.957	+0/-.0007 +0/-.018	.08 2	0.04 1	6,800	5,700 25,354	12,800 56,934	.21 .09
GR 16 N	1.0000 25.4	+0/-.0005 +0/-.013	1.5000 38.1	+0/-.0005 +0/-.013	.750 19.05	1.4997 38.107	1.5007 38.133	+0/-.0007 +0/-.018	.08 2	0.04 1	6,000	4,350 19,349	9,600 42,701	.20 .09
						1.4997 38.107	1.5007 38.133	+0/-.0007 +0/-.018	.08 2	0.04 1	6,000	4,350 19,349	9,600 42,701	.20 .09
GR 16 SS, S, RS, SRS, RSS					1.000 25.40	1.4997 38.107	1.5007 38.133	+0/-.0007 +0/-.018	.08 2	0.04 1	3,800	4,350 19,349	9,600 42,701	.23 .10
GR 16						1.4997 38.107	1.5007 38.133	+0/-.0007 +0/-.018	.08 2	0.04 1	6,000	6,050 26,910	14,500 64,496	.23 .10
GR 18 N	1.1250 28.6	+0/-.0005 +0/-.013	1.6250 41.3	+0/-.0005 +0/-.013	.750 19.05	1.6247 41.284	1.6257 41.309	+0/-.0007 +0/-.018	.09 2	0.04 1	5,300	6,250 27,800	15,200 67,610	.24 .11
						1.6247 41.284	1.6257 41.309	+0/-.0007 +0/-.018	.09 2	0.04 1	5,300	6,250 27,800	15,200 67,610	.24 .11
GR 18 SS, S, RS, SRS, RSS					1.000 25.40	1.6247 41.284	1.6257 41.309	+0/-.0007 +0/-.018	.09 2	0.04 1	3,400	6,250 27,800	15,200 67,610	.3 .14
GR 18						1.6247 41.284	1.6257 41.309	+0/-.0007 +0/-.018	.09 2	0.04 1	5,300	7,900 35,139	20,900 92,963	.3 .14

For sealed bearings, Outside diameter may be slightly oversize due to seal press fit.
For DS matching as DS suffix to part number
* For bearing properly filled with #1 grease reduce speed by 50%

Metric dimensions for reference only.
Not all parts are available from stock. Please contact customer service for availability (800) 626-2120.
For more information on bearing capabilities outside of our standard offering, please contact Application Engineering (800) 626-2093.

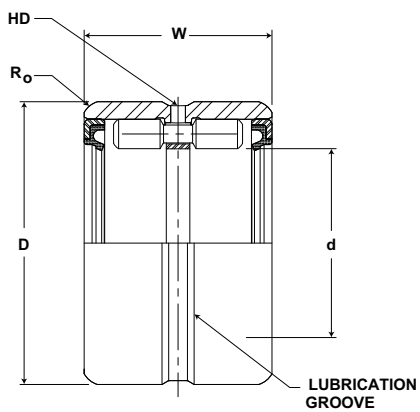

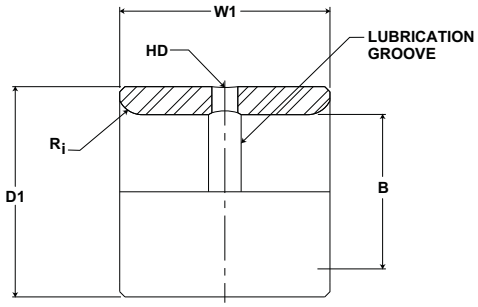

GR SERIES

Part No.		B		D1		W1	HD	Ri	Recommended Shaft Diameter with inner ring			Inner Weight
Outer Ring & Roller Assembly	Separable Inner Ring Only	Bore Diameter		Outside Diameter		Width	Radial Lub. Hole Diameter	Max Shaft Radius to Clear				
		inch mm		inch mm		inch mm			inch mm			lb kg
		Nom	Tol.	Nom	Tol.	Tol +0/-.005 (+0/.13)	(Ref)	(Ref)	Rotating	Stationary	Tol.	
GR 8 N	-	-	-	-	-	-	-	-	-	-	-	-
GR 10 N	MI 6 N	.3750 9.529	+0/-.0004 +0/-.010	.6245 15.869	+0/-.0004 +0/-.010	.760 19.31	0.09 2	0.25 6	.3755 9.5	.3747 9.5	+0/-.0005 +0/-.013	.05 .02
	MI 7 N	.4375 11.117	+0/-.0004 +0/-.010	.6245 15.869	+0/-.0004 +0/-.010	.760 19.31	0.09 2	0.25 6	.4380 11.1	.4372 11.1	+0/-.0005 +0/-.013	.04 .02
GR 10 SS, S, RS, SRS, RSS	MI 6	.3750 9.529	+0/-.0004 +0/-.010	.6245 15.869	+0/-.0004 +0/-.010	1.010 25.66	0.09 2	0.25 6	.3755 9.5	.3747 9.5	+0/-.0005 +0/-.013	.05 .02
GR 10	MI 6	.3750 9.529	+0/-.0004 +0/-.010	.3750 9.530	+0/-.0004 +0/-.010	1.010 25.66	0.09 2	0.25 6	.3755 9.5	.3747 9.5	+0/-.0005 +0/-.013	.05 .02
GR 12 N	MI 8 N	.5000 12.705	+0/-.0004 +0/-.010	.7493 19.040	+0/-.0005 +0/-.013	.760 19.31	0.13 3	0.40 10	.5005 12.7	.4997 12.7	+0/-.0005 +0/-.013	.04 .02
	MI 9 N	.5625 14.293	+0/-.0004 +0/-.010	.7493 19.040	+0/-.0005 +0/-.013	.760 19.31	0.13 3	0.40 10	.5630 14.3	.5623 14.3	+0/-.0005 +0/-.013	.04 .02
GR 12 SS, S, RS, SRS, RSS	MI 8	.5000 12.705	+0/-.0004 +0/-.010	.7493 19.040	+0/-.0005 +0/-.013	1.010 25.66	0.13 3	0.40 10	.5005 12.7	.4997 12.7	+0/-.0005 +0/-.013	.06 .03
GR 12	MI 8	.5000 12.705	+0/-.0004 +0/-.010	.7493 19.040	+0/-.0005 +0/-.013	1.010 25.66	0.13 3	0.40 10	.5005 12.7	.4997 12.7	+0/-.0005 +0/-.013	.06 .03
GR 14 N	MI 10 N	.6250 15.881	+0/-.0004 +0/-.010	.8743 22.216	+0/-.0005 +0/-.013	.760 19.31	0.13 3	0.40 10	.6255 15.9	.6247 15.9	+0/-.0005 +0/-.013	.06 .03
	MI 11 N	.6875 17.469	+0/-.0004 +0/-.010	.8743 22.216	+0/-.0005 +0/-.013	.760 19.31	0.13 3	0.40 10	.6880 17.5	.6872 17.5	+0/-.0005 +0/-.013	.05 .02
GR 14 SS, S, RS, SRS, RSS	MI 10	.6250 15.881	+0/-.0004 +0/-.010	.8743 22.216	+0/-.0005 +0/-.013	1.010 25.66	0.13 3	0.40 10	.6255 15.9	.6247 15.9	+0/-.0005 +0/-.013	.08 .04
GR 14	MI 10	.6250 15.881	+0/-.0004 +0/-.010	.8743 22.216	+0/-.0005 +0/-.013	1.010 25.66	0.13 3	0.40 10	.6255 15.9	.6247 15.9	+0/-.0005 +0/-.013	.08 .04
GR 16 N	MI 12 N	.7500 19.058	+0/-.0004 +0/-.010	.9993 25.392	+0/-.0005 +0/-.013	.760 19.31	0.13 3	0.40 10	.7505 19.1	.7497 19.0	+0/-.0005 +0/-.013	.07 .03
	MI 13 N	.8125 20.646	+0/-.0004 +0/-.010	.9993 25.392	+0/-.0005 +0/-.013	.760 19.31	0.13 3	0.40 10	.8130 20.7	.8121 20.6	+0/-.0005 +0/-.013	.07 .03
GR 16 SS, S, RS, SRS, RSS	MI 12	.7500 19.058	+0/-.0004 +0/-.010	.9993 25.392	+0/-.0005 +0/-.013	1.010 25.66	0.13 3	0.40 10	.7505 19.1	.7497 19.0	+0/-.0005 +0/-.013	.10 .05
GR 16	MI 13	.8125 20.646	+0/-.0004 +0/-.010	.9993 25.392	+0/-.0005 +0/-.013	1.010 25.66	0.13 3	0.40 10	.8130 20.7	.8121 20.6	+0/-.0005 +0/-.013	.11 .05
GR 18 N	MI 14 N	.8750 22.234	+0/-.0005 +0/-.013	1.124 28.563	+0/-.0005 +0/-.013	1.010 25.66	0.13 3	0.40 10	.8755 22.2	.8746 22.2	+0/-.0005 +0/-.013	.11 .05
	MI 15 N	.9375 23.822	+0/-.0005 +0/-.013	1.124 28.563	+0/-.0005 +0/-.013	1.010 25.66	0.13 3	0.40 10	.9380 23.8	.9371 23.8	+0/-.0005 +0/-.013	.11 .05
GR 18 SS, S, RS, SRS, RSS	MI 14	.8750 22.234	+0/-.0005 +0/-.013	1.124 28.563	+0/-.0005 +0/-.013	1.260 32.02	0.13 3	0.40 10	.8755 22.2	.8746 22.2	+0/-.0005 +0/-.013	.13 .06
GR 18	MI 15	.9375 23.822	+0/-.0005 +0/-.013	1.124 28.563	+0/-.0005 +0/-.013	1.260 32.02	0.13 3	0.40 10	.9380 23.8	.9371 23.8	+0/-.0005 +0/-.013	.12 .06

McGILL® GUIDEROL® Bearings

Basic Construction Type: Machined Race with full Complement of Needles

Rolling Elements: Center Guided Precision Needles

Bearing Material: Bearing Quality Steel

Seal Type: Rubber Lip

Lubrication: Sealed Bearings: Lithium Soap Grease NLGI #1
Unsealed Bearings: Rust Preventative

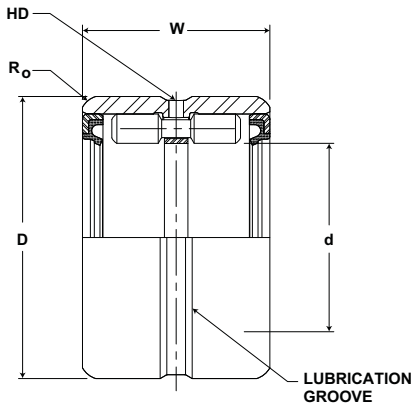

GR SERIES (continued)

Part No.	d		D		W	Housing Bore Diameter			HD	Ro	Limiting Speed (In Oil)*	Basic Dynamic Rating	Basic Static Rating	Outer & Roller Assembly Weight
Outer Ring & Roller Assembly	Shaft Diameter		Outside Diameter		Width				Radial Lub. Hole Diameter	Max Hsg Radius to Clear				
	inch mm		inch mm		inch mm	inch mm			inch mm		RPM	lb/N	lb/N	lb kg
	Nom	Tol.	Nom	Tol.	Tol +0/-.005 (+0/.13)	Rotating	Stationary	Tol.	(Ref)	(Ref)				
GR 20 N	1.2500 31.8	+0/-.0005 +0/-.013	1.7500 44.5	+0/-.0005 +0/-.013	1.000 25.40	1.7497 44.460	1.7507 44.485	+0/-.0007 +0/-.018	.09 2	0.04 1	4,800	6,500 28,912	17,000 75,616	.27 .12
GR 20 SS, S, RS, SRS, RSS					1.250 31.75	1.7497 44.460	1.7507 44.485	+0/-.0007 +0/-.018	.09 2	0.04 1	3,050	6,500 28,912	17,000 75,616	.39 .15
GR 20						1.7497 44.460	1.7507 44.485	+0/-.0007 +0/-.018	.09 2	0.04 1	4,800	8,300 36,918	23,100 102,749	.39 .15
GR 22 N	1.3750 34.9	+0/-.0005 +0/-.013	1.8750 47.6	+0/-.0006 +0/-.015	1.000 25.40	1.8747 47.636	1.8757 47.662	+0/-.0007 +0/-.018	.09 2	0.04 1	4,400	7,100 31,581	18,600 82,733	.31 .14
GR 22 SS, S, RS, SRS, RSS					1.250 31.75	1.8747 47.636	1.8757 47.662	+0/-.0007 +0/-.018	.09 2	0.04 1	2,800	7,100 31,581	18,600 82,733	.36 .16
GR 22						1.8747 47.636	1.8757 47.662	+0/-.0007 +0/-.018	.09 2	0.04 1	4,400	9,050 40,254	25,500 113,424	.36 .16
GR 24 N	1.5000 38.1	+0/-.0005 +0/-.013	2.0625 52.4	+0/-.0006 +0/-.015	1.000 25.40	2.0621 52.398	2.0632 52.426	+0/-.0007 +0/-.018	.09 2	0.06 2	4,000	7,150 31,803	20,200 89,850	.41 .19
GR 24 SS, S, RS, SRS, RSS					1.250 31.75	2.0621 52.398	2.0632 52.426	+0/-.0007 +0/-.018	.09 2	0.06 2	2,500	7,150 31,803	20,200 89,850	.47 .21
GR 24						2.0621 52.398	2.0632 52.426	+0/-.0007 +0/-.018	.09 2	0.06 2	4,000	9,150 40,699	27,800 123,654	.47 .21
GR 26 N	1.6250 41.3	+0/-.0005 +0/-.013	2.1875 55.6	+0/-.0006 +0/-.015	1.000 25.40	2.1871 55.574	2.1882 55.602	+0/-.0007 +0/-.018	.09 2	0.06 2	3,700	7,500 33,360	21,700 96,522	.46 .21
GR 26 SS, S, RS, SRS, RSS					1.250 31.75	2.1871 55.574	2.1882 55.602	+0/-.0007 +0/-.018	.09 2	0.06 2	2,350	7,500 33,360	21,700 96,522	.51 .23
GR 26						2.1871 55.574	2.1882 55.602	+0/-.0007 +0/-.018	.09 2	0.06 2	3,700	9,600 42,701	29,800 132,550	.51 .23
GR 28 N	1.7500 44.5	+0/-.0005 +0/-.013	2.3125 58.8	+0/-.0006 +0/-.015	1.000 25.40	2.3121 58.750	2.3132 58.778	+0/-.0007 +0/-.018	.09 2	0.06 2	3,400	7,750 34,472	23,300 103,638	.47 .21
GR 28 SS, S, RS, SRS, RSS					1.250 31.75	2.3121 58.750	2.3132 58.778	+0/-.0007 +0/-.018	.09 2	0.06 2	2,200	7,750 34,472	23,300 103,638	.55 .25
GR 28						2.3121 58.750	2.3132 58.778	+0/-.0007 +0/-.018	.09 2	0.06 2	3,400	9,850 43,813	32,100 142,781	.55 .25
						2.3121 58.750	2.3132 58.778	+0/-.0007 +0/-.018	.09 2	0.06 2	3,400	9,850 43,813	32,100 142,781	.55 .25
GR 30 SS, S, RS, SRS, RSS	1.8750 47.6	+0/-.0005 +0/-.013	2.4375 61.9	+0/-.0006 +0/-.015	1.250 31.75	2.4371 61.927	2.4382 61.955	+0/-.0007 +0/-.018	.09 2	0.06 2	2,040	8,150 36,251	25,200 112,090	.59 .27
GR 30						2.4371 61.927	2.4382 61.955	+0/-.0007 +0/-.018	.09 2	0.06 2	3,100	8,150 36,251	25,200 112,090	.59 .27
GR 32 N	2.0000 50.8	+0/-.0005 +0/-.013	2.5625 65.1	+0/-.0006 +0/-.015	1.000 25.40	2.5621 65.103	2.5632 65.131	+0/-.0007 +0/-.018	.09 2	0.06 2	3,000	8,000 35,584	26,700 118,762	.55 .25
GR 32 SS, S, RS, SRS, RSS					1.250 31.75	2.5621 65.103	2.5632 65.131	+0/-.0007 +0/-.018	.09 2	0.06 2	1,900	8,000 35,584	26,700 118,762	.61 .28
GR 32						2.5621 65.103	2.5632 65.131	+0/-.0007 +0/-.018	.09 2	0.06 2	3,000	10,250 45,592	36,700 163,242	.61 .28
						2.5621 65.103	2.5632 65.131	+0/-.0007 +0/-.018	.09 2	0.06 2	3,000	10,250 45,592	36,700 163,242	.61 .28

For sealed bearings, Outside diameter may be slightly oversize due to seal press fit.
For DS matching as DS suffix to part number
* For bearing properly filled with #1 grease reduce speed by 50%

Metric dimensions for reference only.
Not all parts are available from stock. Please contact customer service for availability (800) 626-2120.
For more information on bearing capabilities outside of our standard offering, please contact Application Engineering (800) 626-2093.

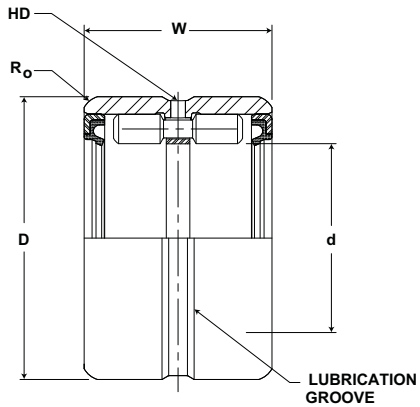

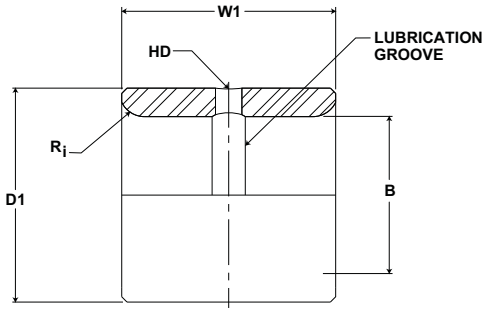

GR SERIES (continued)

Part No.		B		D1		W1	HD	Ri	Recommended Shaft Diameter with inner ring			Inner Weight
Outer Ring & Roller Assembly	Separable Inner Ring Only	Bore Diameter		Outside Diameter		Width	Radial Lub. Hole Diameter	Max Shaft Radius to Clear				
		inch mm		inch mm		inch mm			inch mm			lb kg
		Nom	Tol.	Nom	Tol.	Tol +0/-.005 (+0/.13)	(Ref)	(Ref)	Rotating	Stationary	Tol.	
GR 20 N	MI 16 N	1.0000 25.410	+0/-.0005 +0/-.013	1.2491 31.740	+0/-.0006 +0/-.015	1.010 25.66	0.13 3	0.40 10	1.0005 25.4	0.9996 25.4	+0/-.0005 +0/-.013	.13 .06
GR 20 SS, S, RS, SRS, RSS	MI 16	1.0000 25.410	+0/-.0005 +0/-.013	1.2491 31.740	+0/-.0006 +0/-.015	1.260 32.02	0.13 3	0.40 10	1.0005 25.4	0.9996 25.4	+0/-.0005 +0/-.013	.16 .07
GR 20	MI 16	1.0000 25.410	+0/-.0005 +0/-.013	1.2491 31.740	+0/-.0006 +0/-.015	1.260 32.02	0.13 3	0.40 10	1.0005 25.4	0.9996 25.4	+0/-.0005 +0/-.013	.16 .07
GR 22 N	MI 18 N	1.1250 28.586	+0/-.0005 +0/-.013	1.3741 34.916	+0/-.0006 +0/-.015	1.010 25.66	0.13 3	0.40 10	1.1255 28.6	1.1246 28.6	+0/-.0005 +0/-.013	.14 .06
GR 22 SS, S, RS, SRS, RSS	MI 18	1.1250 28.586	+0/-.0005 +0/-.013	1.3741 34.916	+0/-.0006 +0/-.015	1.260 32.02	0.13 3	0.40 10	1.1255 28.6	1.1246 28.6	+0/-.0005 +0/-.013	.17 .08
GR 22	MI 17	1.0625 26.998	+0/-.0005 +0/-.013	1.3741 34.916	+0/-.0006 +0/-.015	1.260 32.02	0.13 3	0.40 10	1.0630 27.0	1.0621 27.0	+0/-.0005 +0/-.013	.16 .07
GR 24 N	MI 20 N	1.2500 31.763	+0/-.0005 +0/-.013	1.4990 38.090	+0/-.0006 +0/-.015	1.010 25.66	0.13 3	0.06 2	1.2505 31.8	1.2496 31.8	+0/-.0005 +0/-.013	.19 .09
GR 24 SS, S, RS, SRS, RSS	MI 20	1.2500 31.763	+0/-.0005 +0/-.013	1.4990 38.090	+0/-.0006 +0/-.015	1.260 32.02	0.13 3	0.06 2	1.2505 31.8	1.2496 31.8	+0/-.0005 +0/-.013	.22 .09
GR 24	MI 19	1.1875 30.174	+0/-.0005 +0/-.013	1.4990 38.090	+0/-.0006 +0/-.015	1.260 32.02	0.13 3	0.06 2	1.1880 30.2	1.1871 30.2	+0/-.0005 +0/-.013	.24 .11
GR 26 N	MI 21 N	1.3125 33.351	+0/-.0005 +0/-.013	1.6240 41.266	+0/-.0006 +0/-.015	1.010 25.66	0.13 3	0.06 2	1.3130 33.4	1.3121 33.3	+0/-.0005 +0/-.013	.20 .09
GR 26 SS, S, RS, SRS, RSS	MI 21	1.3125 33.351	+0/-.0005 +0/-.013	1.6240 41.266	+0/-.0006 +0/-.015	1.260 32.02	0.13 3	0.06 2	1.3130 33.4	1.3121 33.3	+0/-.0005 +0/-.013	.26 .12
GR 26	MI 22 4S	1.3750 34.939	+0/-.0005 +0/-.013	1.6240 41.266	+0/-.0006 +0/-.015	1.260 32.02	0.13 3	0.06 2	1.3755 35.0	1.3746 34.9	+0/-.0005 +0/-.013	.20 .09
GR 28 N	MI 24 N	1.5000 38.115	+0/-.0005 +0/-.013	1.7490 44.442	+0/-.0006 +0/-.015	1.010 25.66	0.13 3	0.06 2	1.5005 38.1	1.4996 38.1	+0/-.0005 +0/-.013	.22 .09
GR 28 SS, S, RS, SRS, RSS	MI 22	1.3750 34.939	+0/-.0005 +0/-.013	1.7490 44.442	+0/-.0006 +0/-.015	1.260 32.02	0.13 3	0.06 2	1.3755 35.0	1.3746 34.9	+0/-.0005 +0/-.013	.26 .12
GR 28	MI 23	1.4375 36.527	+0/-.0005 +0/-.013	1.7490 44.442	+0/-.0006 +0/-.015	1.260 32.02	0.13 3	0.06 2	1.4380 36.5	1.4371 36.5	+0/-.0005 +0/-.013	.27 .12
	MI 24	1.5000 38.115	+0/-.0005 +0/-.013	1.7490 44.442	+0/-.0006 +0/-.015	1.260 32.02	0.13 3	0.06 2	1.5005 38.1	1.4996 38.1	+0/-.0005 +0/-.013	.22 .09
GR 30 SS, S, RS, SRS, RSS	MI 25 4S	1.5625 39.703	+0/-.0005 +0/-.013	1.8740 47.618	+0/-.0006 +0/-.015	1.260 32.02	0.13 3	0.06 2	1.5630 39.7	1.5621 39.7	+0/-.0005 +0/-.013	.27 .12
GR 30	MI 25 4S	1.5625 39.703	+0/-.0005 +0/-.013	1.8740 47.618	+0/-.0006 +0/-.015	1.260 32.02	0.13 3	0.06 2	1.5630 39.7	1.5621 39.7	+0/-.0005 +0/-.013	.27 .12
GR 32 N	MI 26 N	1.6250 41.291	+0/-.0005 +0/-.013	1.9989 50.792	+0/-.0007 +0/-.018	1.010 25.66	0.13 3	0.06 2	1.6255 41.3	1.6246 41.3	+0/-.0005 +0/-.013	.30 .14
GR 32 SS, S, RS, SRS, RSS	MI 25	1.5625 39.703	+0/-.0005 +0/-.013	1.9989 50.792	+0/-.0007 +0/-.018	1.260 32.02	0.13 3	0.06 2	1.5630 39.7	1.5621 39.7	+0/-.0005 +0/-.013	.30 .14
GR 32	MI 26	1.6250 41.291	+0/-.0005 +0/-.013	1.9989 50.792	+0/-.0007 +0/-.018	1.260 32.0	0.13 3	0.06 2	1.6255 41.3	1.6246 41.3	+0/-.0005 +0/-.013	.38 .17
	MI 27	1.6875 42.879	+0/-.0005 +0/-.013	1.9989 50.792	+0/-.0007 +0/-.018	1.260 32.0	0.13 3	0.06 2	1.6880 42.9	1.6871 42.9	+0/-.0005 +0/-.013	.32 .15

McGILL® GUIDEROL® Bearings

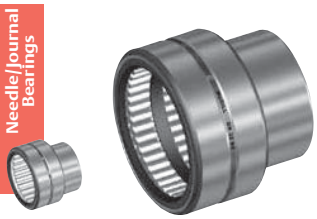

Basic Construction Type: Machined Race with full Complement of Needles

Rolling Elements: Center Guided Precision Needles

Bearing Material: Bearing Quality Steel

Seal Type: Rubber Lip

Lubrication: Sealed Bearings: Lithium Soap Grease NLGI #1
Unsealed Bearings: Rust Preventative

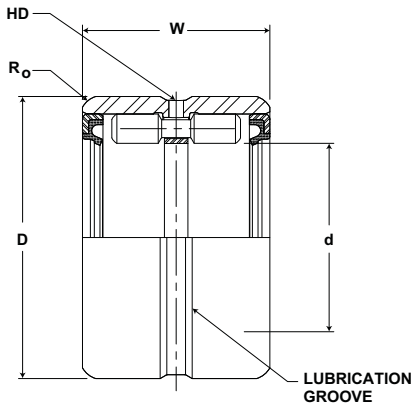

GR SERIES (continued)

Part No.	d		D		W	Housing Bore Diameter			HD	Ro	Limiting Speed (In Oil)*	Basic Dynamic Rating	Basic Static Rating	Outer & Roller Assembly Weight
Outer Ring & Roller Assembly	Shaft Diameter		Outside Diameter		Width				Radial Lub. Hole Diameter	Max Hsg Radius to Clear				
	inch mm		inch mm		inch mm	inch mm			inch mm		RPM	lb/N	lb/N	lb kg
	Nom	Tol.	Nom	Tol.	Tol +0/-.005 (+0/.13)	Rotating	Stationary	Tol.	(Ref)	(Ref)				
GR 36 N	2.2500 57.2	+0/-.0005 +0/-.013	3.0000 76.2	+0/-.0006 +0/-.015	1.500 38.10	2.9996 76.220	3.0007 76.248	+0/-.0007 +0/-.018	.13 3	0.08 2	2,700	15,250 67,832	49,100 218,397	1.13 .51
GR 36 SS, S, RS, SRS, RSS					1.750 44.45	2.9996 76.220	3.0007 76.248	+0/-.0007 +0/-.018	.13 3	0.08 2	1,700	15,250 67,832	49,100 218,397	1.32 .59
GR 36						2.9996 76.220	3.0007 76.248	+0/-.0007 +0/-.018	.13 3	0.08 2	2,700	18,450 82,066	60,200 267,770	1.32 .59
GR 40 N	2.5000 63.5	+0/-.0005 +0/-.013	3.2500 82.6	+0/-.0008 +0/-.020	1.500 38.10	3.2496 82.572	3.2507 82.600	+0/-.0007 +0/-.018	.13 3	0.08 2	2,400	16,200 72,058	54,500 242,416	1.23 .56
GR 40 SS, S, RS, SRS, RSS					1.750 44.45	3.2496 82.572	3.2507 82.600	+0/-.0007 +0/-.018	.13 3	0.08 2	1,530	16,200 72,058	54,500 242,416	1.44 .65
GR 40						3.2496 82.572	3.2507 82.600	+0/-.0007 +0/-.018	.13 3	0.08 2	2,400	19,800 88,070	66,800 297,126	1.44 .65
						3.2496 82.572	3.2507 82.600	+0/-.0007 +0/-.018	.13 3	0.08 2	2,400	19,800 88,070	66,800 297,126	1.44 .65
GR 44 N	2.7500 69.9	+0/-.0005 +0/-.013	3.5000 88.9	+0/-.0008 +0/-.020	1.500 38.10	3.4995 88.922	3.5008 88.955	+0/-.0010 +0/-.025	.13 3	0.08 2	2,200	16,800 74,726	59,900 266,435	1.36 .62
GR 44 SS, S, RS, SRS, RSS					1.750 44.45	3.4995 88.922	3.5008 88.955	+0/-.0010 +0/-.025	.13 3	0.08 2	1,390	16,800 74,726	59,900 266,435	1.59 .72
GR 44						3.4995 88.922	3.5008 88.955	+0/-.0010 +0/-.025	.13 3	0.08 2	2,200	20,350 90,517	73,400 326,483	1.59 .72
GR 48 N	3.0000 76.2	+0/-.0005 +0/-.013	3.7500 95.3	+0/-.0008 +0/-.020	1.500 38.10	3.7495 95.275	3.7508 95.308	+0/-.0010 +0/-.025	.13 3	0.08 2	2,000	20,500 91,184	65,400 290,899	1.53 .69
GR 48 SS, S, RS, SRS, RSS					1.750 44.45	3.7495 95.275	3.7508 95.308	+0/-.0010 +0/-.025	.13 3	0.08 2	1,270	20,500 91,184	65,400 290,899	1.70 .77
GR 48						3.7495 95.275	3.7508 95.308	+0/-.0010 +0/-.025	.13 3	0.08 2	2,000	20,600 91,629	80,200 356,730	1.70 .77
						3.7495 95.275	3.7508 95.308	+0/-.0010 +0/-.025	.13 3	0.08 2	2,000	20,600 91,629	80,200 356,730	1.70 .77
GR 52 SS, S, RS, SRS, RSS	3.2500 82.6	+0/-.0005 +0/-.013	4.2500 108.0	+0/-.0008 +0/-.020	1.750 44.45	4.2495 107.980	4.2508 108.013	+0/-.0010 +0/-.025	.19 5	0.08 2	1,175	25,100 111,645	63,800 283,782	2.64 1.19
GR 52						4.2495 107.980	4.2508 108.013	+0/-.0010 +0/-.025	.19 5	0.08 2	1,850	23,950 106,530	80,100 356,285	2.64 1.19
GR 56 N	3.5000 88.9	+0/-.0005 +0/-.013	4.5000 114.3	+0/-.0008 +0/-.020	1.750 44.45	3.2496 82.572	3.2507 82.600	+0/-.0010 +0/-.025	.19 5	0.08 2	1,700	25,100 111,645	86,500 384,752	2.88 1.31
GR 56 SS, S, RS, SRS, RSS					2.000 50.80	3.4995 88.922	3.5008 88.955	+0/-.0010 +0/-.025	.19 5	0.08 2	1,090	25,100 111,645	86,500 384,752	3.18 1.44
GR 56						3.4995 88.922	3.5008 88.955	+0/-.0010 +0/-.025	.19 5	0.08 2	1,700	28,900 128,547	104,000 462,592	3.18 1.44
						3.4995 88.922	3.5008 88.955	+0/-.0010 +0/-.025	.19 5	0.08 2	1,700	28,900 128,547	104,000 462,592	3.18 1.44
GR 60 SS, S, RS, SRS, RSS	3.7500 95.3	+0/-.0005 +0/-.013	4.7500 120.7	+0/-.0008 +0/-.020	2.000 50.80	4.7495 120.685	4.7508 120.718	+0/-.0010 +0/-.025	.19 5	0.10 3	1,020	25,450 113,202	92,300 410,550	3.38 1.53
GR 60						4.7495 120.685	4.7508 120.718	+0/-.0010 +0/-.025	.19 5	0.10 3	1,600	29,300 130,326	111,000 493,728	3.38 1.53

For sealed bearings, Outside diameter may be slightly oversize due to seal press fit.
For DS matching as DS suffix to part number
* For bearing properly filled with #1 grease reduce speed by 50%

Metric dimensions for reference only.
Not all parts are available from stock. Please contact customer service for availability (800) 626-2120.
For more information on bearing capabilities outside of our standard offering, please contact Application Engineering (800) 626-2093.

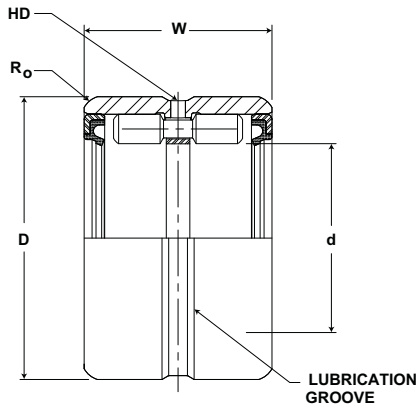

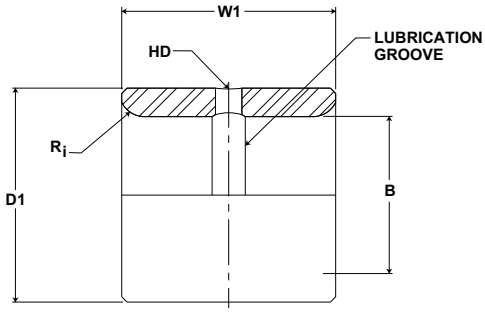

GR SERIES (continued)

Part No.		B		D1		W1	HD	Ri	Recommended Shaft Diameter with inner ring			Inner Weight
Outer Ring & Roller Assembly	Separable Inner Ring Only	Bore Diameter		Outside Diameter		Width	Radial Lub. Hole Diameter	Max Shaft Radius to Clear				
		inch mm		inch mm		inch mm			inch mm			lb kg
		Nom	Tol.	Nom	Tol.	Tol +0/-.005 (+0/.13)	(Ref)	(Ref)	Rotating	Stationary	Tol.	
GR 36 N	MI 28 N	1.7500 44.468	+0/-.0005 +0/-.013	2.2489 57.145	+0/-.0007 +0/-.018	1.510 38.37	0.19 5	0.06 2	1.7505 44.5	1.7496 44.5	+0/-.0005 +0/-.013	.63 .29
GR 36 SS, S, RS, SRS, RSS	MI 28	1.7500 44.468	+0/-.0005 +0/-.013	2.2489 57.1	+0/-.0007 +0/-.018	1.760 44.72	0.19 5	0.06 2	1.7505 44.5	1.7497 44.5	+0/-.0005 +0/-.013	.74 .34
GR 36	MI 30	1.8750 47.644	+0/-.0005 +0/-.013	2.2489 57.1	+0/-.0007 +0/-.018	1.760 44.72	0.19 5	0.06 2	1.8755 47.7	1.8746 47.6	+0/-.0005 +0/-.013	.85 .39
GR 40 N	MI 32 N	2.0000 50.820	+0/-.0005 +0/-.013	2.2489 57.145	+0/-.0007 +0/-.018	1.510 38.37	0.19 5	0.08 2	2.0005 50.8	1.9996 50.8	+0/-.0005 +0/-.013	.74 .34
GR 40 SS, S, RS, SRS, RSS	MI 31	1.9375 49.232	+0/-.0005 +0/-.013	2.2489 57.1	+0/-.0007 +0/-.018	1.510 38.4	0.19 5	0.08 2	1.9380 49.2	1.9371 49.2	+0/-.0005 +0/-.013	.97 .44
GR 40	MI 32	2.0000 50.820	+0/-.0005 +0/-.013	2.2489 57.1	+0/-.0007 +0/-.018	1.760 44.72	0.19 5	0.08 2	2.0005 50.8	1.9996 50.8	+0/-.0005 +0/-.013	.87 .39
	MI 34	2.1250 53.996	+0/-.0006 +0/-.015	2.2489 57.1	+0/-.0007 +0/-.018	1.760 44.7	0.19 5	0.08 2	2.1258 54.0	2.1247 54.0	+0/-.0008 +0/-.020	1.00 .45
GR 44 N	MI 36 N	2.2500 57.173	+0/-.0006 +0/-.015	2.7489 69.850	+0/-.0007 +0/-.018	1.510 38.37	0.19 5	0.08 2	2.2508 57.2	2.2497 57.2	+0/-.0008 +0/-.020	.83 .36
GR 44 SS, S, RS, SRS, RSS	MI 35	2.1875 55.584	+0/-.0006 +0/-.015	2.7489 69.8	+0/-.0007 +0/-.018	1.510 38.4	0.19 5	0.08 2	2.1883 55.6	2.1872 55.6	+0/-.0008 +0/-.020	1.06 .48
GR 44	MI 36	2.2500 57.173	+0/-.0006 +0/-.015	2.7489 69.8	+0/-.0007 +0/-.018	1.760 44.72	0.19 5	0.08 2	2.2508 57.2	2.2497 57.2	+0/-.0008 +0/-.020	.97 .44
GR 48 N	MI 40 N	2.5000 63.525	+0/-.0006 +0/-.015	2.9989 76.202	+0/-.0007 +0/-.018	1.510 38.37	0.19 5	0.08 2	2.5008 63.5	2.4997 63.5	+0/-.0008 +0/-.020	.92 .43
GR 48 SS, S, RS, SRS, RSS	MI 38	2.3750 60.349	+0/-.0006 +0/-.015	2.9989 76.2	+0/-.0007 +0/-.018	1.760 44.72	0.19 5	0.08 2	2.3758 60.4	2.3747 60.3	+0/-.0008 +0/-.020	1.28 .58
GR 48	MI 39	2.4375 61.937	+0/-.0006 +0/-.015	2.9989 76.2	+0/-.0007 +0/-.018	1.510 38.37	0.19 5	0.08 2	2.4383 62.0	2.4372 61.9	+0/-.0008 +0/-.020	1.05 .47
	MI 40	2.5000 63.525	+0/-.0006 +0/-.015	2.9989 76.2	+0/-.0007 +0/-.018	1.760 44.72	0.19 5	0.08 2	2.5008 63.5	2.4997 63.5	+0/-.0008 +0/-.020	1.07 .48
GR 52 SS, S, RS, SRS, RSS	MI 42	2.6250 66.701	+0/-.0006 +0/-.015	3.2487 82.549	+0/-.0009 +0/-.023	1.760 44.72	0.19 5	0.08 2	2.6258 66.7	2.6247 66.7	+0/-.0008 +0/-.020	1.12 .51
GR 52	MI 44	2.7500 69.878	+0/-.0006 +0/-.015	3.2487 82.549	+0/-.0009 +0/-.023	1.760 44.72	0.19 5	0.08 2	2.7508 69.9	2.7497 69.9	+0/-.0008 +0/-.020	1.17 .53
GR 56 N	MI 48 N	3.0000 76.230	+0/-.0006 +0/-.015	3.4987 88.902	+0/-.0009 +0/-.023	1.760 44.72	0.25 6	0.08 2	3.0008 76.3	2.9997 76.2	+0/-.0008 +0/-.020	1.32 .55
GR 56 SS, S, RS, SRS, RSS	MI 46	2.8750 73.054	+0/-.0006 +0/-.015	3.4987 88.9	+0/-.0009 +0/-.023	2.010 51.07	0.25 6	0.08 2	2.8758 73.1	2.8747 73.0	+0/-.0008 +0/-.020	1.30 .59
GR 56	MI 47	2.9375 74.642	+0/-.0006 +0/-.015	3.4987 88.9	+0/-.0009 +0/-.023	2.010 51.07	0.25 6	0.08 2	2.9383 74.7	2.9372 74.6	+0/-.0008 +0/-.020	1.58 .72
	MI 48	3.0000 76.230	+0/-.0006 +0/-.015	3.4987 88.9	+0/-.0009 +0/-.023	2.010 51.1	0.25 6	0.08 2	3.0008 76.3	2.9997 76.2	+0/-.0008 +0/-.020	1.43 .65
GR 60 SS, S, RS, SRS, RSS	MI 50	3.1250 79.406	+0/-.0006 +0/-.015	3.7487 95.254	+0/-.0009 +0/-.023	2.010 51.07	0.25 6	0.10 3	3.1260 79.4	3.1246 79.4	+0/-.0010 +0/-.025	1.88 .85
GR 60	MI 52	3.2500 82.583	+0/-.0006 +0/-.015	3.7487 95.254	+0/-.0009 +0/-.023	2.010 51.07	0.25 6	0.10 3	3.2510 82.6	3.2496 82.6	+0/-.0010 +0/-.025	1.52 .69

McGILL® GUIDEROL® Bearings

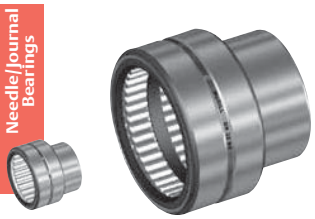

Basic Construction Type: Machined Race with full Complement of Needles

Rolling Elements: Center Guided Precision Needles

Bearing Material: Bearing Quality Steel

Seal Type: Rubber Lip

Lubrication: Sealed Bearings: Lithium Soap Grease NLGI #1
Unsealed Bearings: Rust Preventative

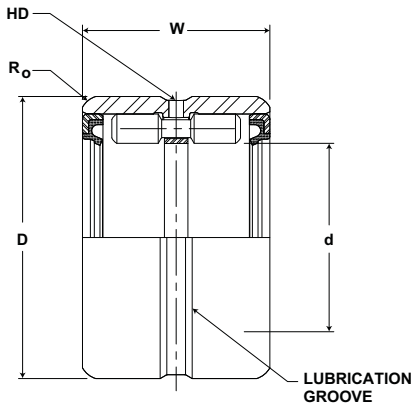

GR SERIES (continued)

Part No.	d		D		W	Housing Bore Diameter			HD	Ro	Limiting Speed (In Oil)*	Basic Dynamic Rating	Basic Static Rating	Outer & Roller Assembly Weight
Outer Ring & Roller Assembly	Shaft Diameter		Outside Diameter		Width				Radial Lub. Hole Diameter	Max Hsg Radius to Clear				
	inch mm		inch mm		inch mm	inch mm			inch mm		RPM	lb/N	lb/N	lb kg
	Nom	Tol.	Nom	Tol.	Tol +0/-.005 (+0/.13)	Rotating	Stationary	Tol.	(Ref)	(Ref)				
GR 64 SS, S, RS, SRS, RSS	4.0000 101.6	+0/-.0007 +0/-.018	5.0000 127.1	+0/-.0010 +0/-.025	2.000 50.80	4.9999 127.047	5.0011 127.078	+0/-.0015 +0/-.038	.19 5	0.10 3	950	26,750 118,984	98,800 439,462	3.56 1.61
GR 64						4.9999 127.047	5.0011 127.078	+0/-.0015 +0/-.038	.19 5	0.10 3	1,500	30,900 137,443	119,000 529,312	3.56 1.61
GR 68 SS, S, RS, SRS, RSS	4.2500 108.0	+0/-.0007 +0/-.018	5.2500 133.4	+0/-.0010 +0/-.025	2.000 50.80	5.2499 133.400	5.2511 133.430	+0/-.0015 +0/-.038	.19 5	0.10 3	900	27,400 121,875	104,000 462,592	3.74 1.69
GR 68						5.2499 133.400	5.2511 133.430	+0/-.0015 +0/-.038	.19 5	0.10 3	1,410	31,500 140,112	126,000 560,448	3.74 1.69
GR 72	4.5000 114.3	+0/-.0007 +0/-.018	6.0000 152.5	+0/-.0010 +0/-.025	2.250 57.15	5.9999 152.457	6.0011 152.488	+0/-.0015 +0/-.038	.19 5	0.10 3	1,330	43,400 193,043	145,000 644,960	7.13 3.23
GR 80	5.0000 127.1	+0/-.0007 +0/-.018	6.5000 165.2	+0/-.0010 +0/-.025	2.250 57.15	6.4999 165.162	6.5011 165.193	+0/-.0015 +0/-.038	.19 5	0.10 3	1,200	48,800 217,062	161,000 716,128	7.78 3.53
						6.4999 165.162	6.5011 165.193	+0/-.0015 +0/-.038	.19 5	0.10 3	1,200	48,800 217,062	161,000 716,128	7.78 3.53
GR 88 N	5.5000 139.8	+0/-.0007 +0/-.018	7.0000 177.9	+0/-.0010 +0/-.025	2.500 63.50	4.7495 120.685	4.7508 120.718	+0/-.0015 +0/-.038	.25 6	0.10 3	1,090	60,700 269,994	171,000 760,608	10.40 4.73
GR 88					3.000 76.20	4.7495 120.685	4.7508 120.718	+0/-.0015 +0/-.038	.25 6	0.10 3	1,090	65,000 289,120	205,000 911,840	11.82 5.36
GR 96 N	6.0000 152.5	+0/-.0010 +0/-.025	7.5000 190.6	+0/-.0012 +0/-.030	2.500 63.50	5.2499 133.400	5.2511 133.430	+0/-.0015 +0/-.038	.25 6	0.12 3	1,000	65,700 292,234	223,000 991,904	11.08 5.02
GR 96					3.000 76.20	5.2499 133.400	5.2511 133.430	+0/-.0015 +0/-.038	.25 6	0.12 3	1,000	71,400 317,587	283,000 1,258,784	12.69 5.76
GR 104 N	6.5000 165.2	+0/-.0010 +0/-.025	8.0000 203.3	+0/-.0012 +0/-.030	2.500 63.50	5.9999 152.457	6.0011 152.488	+0/-.0015 +0/-.038	.25 6	0.12 3	930	68,900 306,467	242,000 1,076,416	11.85 5.37
GR 104					3.000 76.20	5.9999 152.457	6.0011 152.488	+0/-.0015 +0/-.038	.25 6	0.12 3	930	75,000 333,600	308,000 1,369,984	13.55 6.15
GR 116	7.2500 184.2	+0/-.0010 +0/-.025	9.1250 231.9	+0/-.0012 +0/-.030	3.000 76.20	9.1248 231.861	9.1261 231.894	+0/-.0015 +0/-.038	.25 6	0.12 3	840	83,900 373,187	332,000 1,476,736	19.32 8.76
GR 124	7.7500 196.9	+0/-.0010 +0/-.025	9.6250 244.6	+0/-.0012 +0/-.030	3.000 76.20	6.6250 168.341	6.6265 168.379	+0/-.0020 +0/-.051	.25 6	0.12 3	770	86,200 383,418	355,000 1,579,040	19.80 8.97
GR 132	8.2500 209.6	+0/-.0010 +0/-.025	10.1250 257.3	+0/-.0012 +0/-.030	3.000 76.20	10.1250 257.276	10.1265 257.314	+0/-.0020 +0/-.051	.25 6	0.12 3	730	88,700 394,538	378,000 1,681,344	21.63 9.81
GR 140	8.7500 222.3	+0/-.0010 +0/-.025	10.6250 270.0	+0/-.0014 +0/-.036	3.000 76.20	10.6250 269.981	10.6265 270.019	+0/-.0020 +0/-.051	.25 6	0.16 4	690	91,500 406,992	401,000 1,783,648	22.73 10.31
GR 148	9.2500 235.0	+0/-.0010 +0/-.025	11.1250 282.7	+0/-.0014 +0/-.036	3.000 76.20	11.1250 282.686	11.1265 282.724	+0/-.0020 +0/-.051	.25 6	0.16 4	650	93,500 415,888	423,000 1,881,504	24.00 10.88

For sealed bearings, Outside diameter may be slightly oversize due to seal press fit.
For DS matching as DS suffix to part number
* For bearing properly filled with #1 grease reduce speed by 50%

Metric dimensions for reference only.
Not all parts are available from stock. Please contact customer service for availability (800) 626-2120.
For more information on bearing capabilities outside of our standard offering, please contact Application Engineering (800) 626-2093.

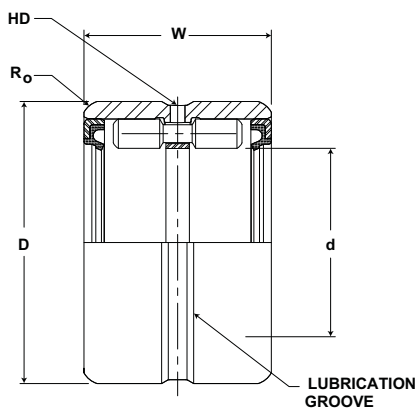

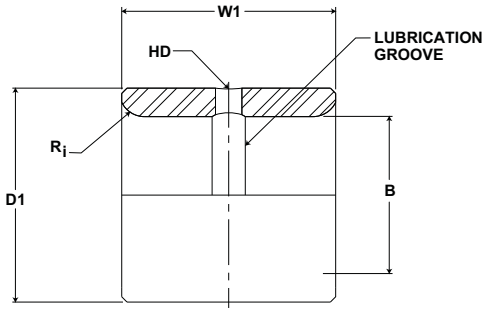

GR SERIES (continued)

Part No.		B		D1		W1	HD	Ri	Recommended Shaft Diameter with inner ring			Inner Weight
Outer Ring & Roller Assembly	Separable Inner Ring Only	Bore Diameter		Outside Diameter		Width	Radial Lub. Hole Diameter	Max Shaft Radius to Clear				
		inch mm		inch mm		inch mm			inch mm			lb kg
		Nom	Tol.	Nom	Tol.	Tol +0/-.005 (+0/.13)	(Ref)	(Ref)	Rotating	Stationary	Tol.	
GR 64 SS, S, RS, SRS, RSS	MI 54	3.3750 85.759	+0/-.0008 +0/-.020	3.9985 101.602	+0/-.0009 +0/-.023	2.010 51.07	0.25 6	0.10 3	3.3760 85.8	3.3746 85.7	+0/-.0010 +0/-.025	2.04 .93
GR 64	MI 56	3.5000 88.935	+0/-.0008 +0/-.020	3.9985 101.602	+0/-.0009 +0/-.023	2.010 51.07	0.25 6	0.10 3	3.5010 89.0	3.4996 88.9	+0/-.0010 +0/-.025	1.63 .74
GR 68 SS, S, RS, SRS, RSS	MI 58	3.6250 92.111	+0/-.0008 +0/-.020	4.2485 107.954	+0/-.0009 +0/-.023	2.010 51.07	0.25 6	0.10 3	3.6260 92.1	3.6246 92.1	+0/-.0010 +0/-.025	1.70 .77
GR 68	MI 60	3.7500 95.288	+0/-.0008 +0/-.020	4.2485 107.954	+0/-.0009 +0/-.023	2.010 51.07	0.25 6	0.10 3	3.7510 95.3	3.7496 95.3	+0/-.0010 +0/-.025	1.75 .79
GR 72	MI 62	3.8750 98.464	+0/-.0008 +0/-.020	4.4985 114.307	+0/-.0009 +0/-.023	2.260 57.43	0.25 6	0.10 3	3.8760 98.5	3.8746 98.5	+0/-.0010 +0/-.025	3.25 1.47
GR 80	MI 64	4.0000 101.640	+0/-.0008 +0/-.020	4.9985 127.012	+0/-.0010 +0/-.025	2.260 57.43	0.25 6	0.10 3	4.0010 101.7	3.9996 101.6	+0/-.0010 +0/-.025	4.38 1.99
	MI 68	4.2500 107.993	+0/-.0008 +0/-.020	4.9985 127.012	+0/-.0010 +0/-.025	2.260 57.43	0.25 6	0.10 3	4.2510 108.0	4.2496 108.0	+0/-.0010 +0/-.025	5.24 2.37
GR 88 N	MI 72 N	4.5000 114.345	+0/-.0008 +0/-.020	5.4985 139.717	+0/-.0010 +0/-.025	2.515 63.91	0.25 6	0.10 3	4.5010 114.4	4.4996 114.3	+0/-.0010 +0/-.025	5.43 2.47
GR 88	MI 72	4.5000 114.345	+0/-.0008 +0/-.020	5.4985 139.717	+0/-.0010 +0/-.025	3.015 76.61	0.25 6	0.10 3	4.5010 114.4	4.4996 114.3	+0/-.0010 +0/-.025	5.97 2.71
GR 96 N	MI 80 N	5.0000 127.050	+0/-.0010 +0/-.025	5.9983 152.417	+0/-.0010 +0/-.025	2.515 63.91	0.31 8	0.12 3	5.0010 127.1	4.9995 127.0	+0/-.0010 +0/-.025	5.97 2.71
GR 96	MI 80	5.0000 127.050	+0/-.0010 +0/-.025	5.9983 152.417	+0/-.0010 +0/-.025	3.015 76.61	0.31 8	0.12 3	5.0010 127.1	4.9995 127.0	+0/-.0010 +0/-.025	7.12 3.23
GR 104 N	MI 88 N	5.5000 139.755	+0/-.0010 +0/-.025	6.4983 165.122	+0/-.0010 +0/-.025	2.515 63.91	0.31 8	0.12 3	5.5010 139.8	5.4995 139.7	+0/-.0010 +0/-.025	6.30 2.88
GR 104	MI 88	5.5000 139.755	+0/-.0010 +0/-.025	6.4983 165.122	+0/-.0010 +0/-.025	3.015 76.61	0.31 8	0.12 3	5.5010 139.8	5.4995 139.7	+0/-.0010 +0/-.025	7.56 3.43
GR 116	MI 96	6.0000 152.460	+0/-.0010 +0/-.025	7.2481 184.174	+0/-.0012 +0/-.030	3.015 76.61	0.31 8	0.12 3	6.0012 152.5	5.9995 152.4	+0/-.0012 +0/-.030	11.06 5.03
GR 124	MI 104	6.5000 165.165	+0/-.0010 +0/-.025	7.7481 196.879	+0/-.0012 +0/-.030	3.015 76.61	0.31 8	0.12 3	6.5012 165.2	6.4995 165.2	+0/-.0012 +0/-.030	11.99 5.39
GR 132	MI 112	7.0000 177.870	+0/-.0010 +0/-.025	8.2481 209.584	+0/-.0012 +0/-.030	3.015 76.61	0.31 8	0.12 3	7.0012 177.9	6.9995 177.9	+0/-.0012 +0/-.030	12.70 5.77
GR 140	MI 120	7.5000 190.575	+0/-.0012 +0/-.030	8.7480 222.287	+0/-.0012 +0/-.030	3.015 76.61	0.31 8	0.16 4	7.5012 190.6	7.4995 190.6	+0/-.0012 +0/-.030	13.60 6.17
GR 148	MI 128	8.0000 203.280	+0/-.0012 +0/-.030	9.2480 234.992	+0/-.0012 +0/-.030	3.015 76.61	0.31 8	0.16 4	8.0012 203.3	7.9995 203.3	+0/-.0012 +0/-.030	14.40 6.55

McGill Machined Inner Ring

Precision ground inner ring provides a hardened raceway for the rollers when used with an unhardened shaft. The ring contains an oil hole and annular groove for relubrication of the bearing and can be used with both CAGEROL and GUIDEROL bearings or can be utilized as a bushing in plain bearing applications.

Basic Construction Type: Thru Hardened Precision Ground Rings

Ring Material: Bearing Quality Steel

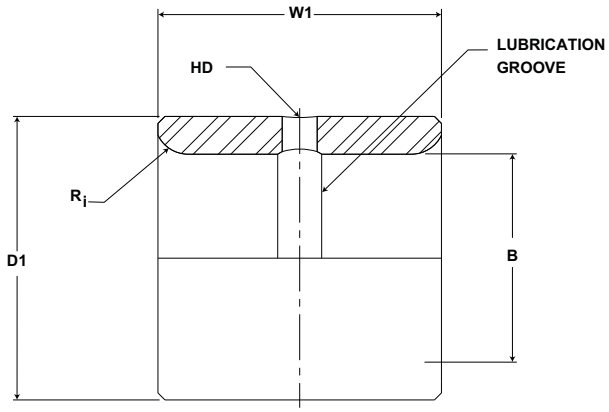

MI Series

Part No.	Military No.	B Bore Diameter		D1 Outside Diameter		W1 Width	Ri Inner Ring Corner	Recommended Shaft Diameter with Inner Ring			Inner Weight
		inch mm		inch mm		inch mm		inch mm			lb kg
Inner Ring		Nom	Tol.	Nom	Tol.	Tol +0/-.005 (+0/.13)	(Ref)	Rotating	Stationary	Tol.	
MI 6 N	MS 51962-1	.3750 9.5	+0/-.0004 +0/-.010	.6245 15.9	+0/-.0004 +0/-.010	.760 19.3	.25 6	.3755 9.5	.3747 9.5	+0/-.0005 +0/-.013	.05 .02
MI 6						1.010 25.7	.25 6	.3755 9.5	.3747 9.5	+0/-.0005 +0/-.013	.05 .02
MI 7 N		.4375 11.1	+0/-.0004 +0/-.010	.6245 15.9	+0/-.0004 +0/-.010	.760 19.3	.25 6	.4380 11.1	.4372 11.1	+0/-.0005 +0/-.013	.04 .02
MI 8 N	MS 51962-2	.5000 12.7	+0/-.0004 +0/-.010	.7493 19.0	+0/-.0005 +0/-.013	.760 19.3	.40 10	.5005 12.7	.4997 12.7	+0/-.0005 +0/-.013	.04 .02
MI 8	MS 51962-3					1.010 25.7	.40 10	.5005 12.7	.4997 12.7	+0/-.0005 +0/-.013	.06 .03
MI 9 N		.5625 14.3	+0/-.0004 +0/-.010	.7493 19.0	+0/-.0005 +0/-.013	.760 19.3	.40 10	.5630 14.3	.5622 14.3	+0/-.0005 +0/-.013	.04 .02
MI 10		.6250 15.9	+0/-.0004 +0/-.010	.8743 22.2	+0/-.0005 +0/-.013	1.010 25.7	.40 10	.6255 15.9	.6247 15.9	+0/-.0005 +0/-.013	.08 .04
MI 10 N	MS 51962-4					.760 19.3	.40 10	.6255 15.9	.6247 15.9	+0/-.0005 +0/-.013	.06 .03
MI 11 N		.6875 17.5	+0/-.0004 +0/-.010	.8743 22.2	+0/-.0005 +0/-.013	.760 19.3	.40 10	.6880 17.5	.6872 17.5	+0/-.0005 +0/-.013	.05 .02
MI 12 N	MS 51962-5	.7500 19.1	+0/-.0004 +0/-.010	.9993 25.4	+0/-.0005 +0/-.013	.760 19.3	.40 10	.7505 19.1	.7497 19.0	+0/-.0005 +0/-.013	.07 .03
MI 12						1.010 25.7	.40 10	.7505 19.1	.7497 19.0	+0/-.0005 +0/-.013	.10 .05
MI 13 N	MS 51962-6	.8125 20.6	+0/-.0005 +0/-.013	.9993 25.4	+0/-.0005 +0/-.013	.760 19.3	.40 10	.8129 20.7	.8121 20.6	+0/-.0005 +0/-.013	.07 .03
MI 13	MS 51962-7					1.010 25.7	.40 10	.8130 20.7	.8122 20.6	+0/-.0005 +0/-.013	.11 .05
MI 14 N	MS 51962-8	.8750 22.2	+0/-.0005 +0/-.013	1.124 28.6	+0/-.0005 +0/-.013	1.010 25.7	.40 10	.8754 22.2	.8746 22.2	+0/-.0005 +0/-.013	.11 .05
MI 14						1.260 32.0	.40 10	.8755 22.2	.8747 22.2	+0/-.0005 +0/-.013	.13 .06
MI 14 N	MS 51962-8	.8750 22.2	+0/-.0005 +0/-.013	1.124 28.6	+0/-.0005 +0/-.013	1.010 25.7	.40 10	.9379 23.8	.9371 23.8	+0/-.0005 +0/-.013	.11 .05
MI 15						1.260 32.0	.40 10	.9380 23.8	.9372 23.8	+0/-.0005 +0/-.013	.12 .05

Metric dimensions for reference only.
Not all parts are available from stock. Please contact customer service for availability (800) 626-2120.
For more information on bearing capabilities outside of our standard offering, please contact Application Engineering (800) 626-2093.

Bearing Selection Page C-3 | Nomenclature Aid Page C-18 | Features & Benefits Page C-19 | Product Options Page C-20 | Technical Engineering Page C-45

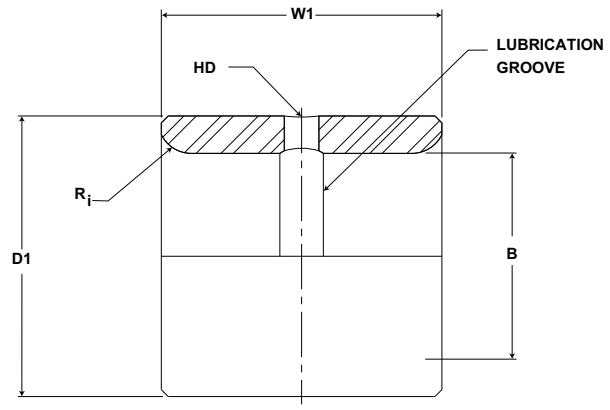

MI Series

Part No.	Military No.	B Bore Diameter		D1 Outside Diameter		W1 Width	Ri Inner Ring Corner	Recommended Shaft Diameter with Inner Ring			Inner Weight
		inch mm		inch mm		inch mm		inch mm			lb kg
Inner Ring		Nom	Tol.	Nom	Tol.	Tol +0/-.005 (+0/.13)	(Ref)	Rotating	Stationary	Tol.	
MI 16 N	MS 51962-10	1.000 25.4	+0/-.0005 +0/-.013	1.249 31.7	+0/-.0006 +0/-.015	1.010 25.7	.40 10	1.0004 25.4	.9996 25.4	+0/-.0005 +0/-.013	.13 .06
MI 16	MS 51962-11					1.260 32.0	.40 10	1.001 25.4	1.000 25.4	+0/-.0005 +0/-.013	.16 .07
MI 17		1.063 27.0	+0/-.0005 +0/-.013	1.374 34.9	+0/-.0006 +0/-.015	1.260 32.0	.40 10	1.063 27.0	1.0621 27.0	+0/-.0005 +0/-.013	.16 .07
MI 18 N	MS 51962-12	1.125 28.6	+0/-.0005 +0/-.013	1.374 34.9	+0/-.0006 +0/-.015	1.010 25.7	.40 10	1.1255 28.6	1.1246 28.6	+0/-.0005 +0/-.013	.14 .06
MI 18	MS 51962-13					1.260 32.0	.40 10	1.126 28.6	1.125 28.6	+0/-.0005 +0/-.013	.17 .08
MI 19	MS 51962-14	1.188 30.2	+0/-.0005 +0/-.013	1.499 38.1	+0/-.0006 +0/-.015	1.260 32.0	.06 2	1.188 30.2	1.1871 30.2	+0/-.0005 +0/-.013	.24 .11
MI 20 N	MS 51962-15	1.250 31.8	+0/-.0005 +0/-.013	1.499 38.1	+0/-.0006 +0/-.015	1.010 25.7	.06 2	1.2505 31.8	1.2496 31.8	+0/-.0005 +0/-.013	.19 .09
MI 20	MS 51962-16					1.260 32.0	.06 2	1.251 31.8	1.250 31.8	+0/-.0005 +0/-.013	.22 .09
MI 21 N	MS 51962-17	1.313 33.4	+0/-.0005 +0/-.013	1.624 41.3	+0/-.0006 +0/-.015	1.010 25.7	.06 2	1.313 33.4	1.3121 33.3	+0/-.0005 +0/-.013	.20 .09
MI 21						1.260 32.0	.06 2	1.313 33.4	1.312 33.3	+0/-.0005 +0/-.013	.26 .12
MI 22 4S	MS 51962-18	1.375 34.9	+0/-.0005 +0/-.013	1.624 41.3	+0/-.0006 +0/-.015	1.260 32.0	.06 2	1.3755 35.0	1.3746 34.9	+0/-.0005 +0/-.013	.20 .09
MI 22	MS 51962-19			1.749 44.4	+0/-.0006 +0/-.015	1.260 32.0	.06 2	1.376 35.0	1.375 34.9	+0/-.0005 +0/-.013	.26 .12
MI 23	MS 51962-20	1.438 36.5	+0/-.0005 +0/-.013	1.749 44.4	+0/-.0006 +0/-.015	1.260 32.0	.06 2	1.438 36.5	1.4371 36.5	+0/-.0005 +0/-.013	.27 .12
MI 24 N	MS 51962-21	1.500 38.1	+0/-.0005 +0/-.013	1.749 44.4	+0/-.0006 +0/-.015	1.010 25.7	.06 2	1.5005 38.1	1.4996 38.1	+0/-.0005 +0/-.013	.22 .09
MI 24	MS 51962-22					1.260 32.0	.06 2	1.501 38.1	1.500 38.1	+0/-.0005 +0/-.013	.22 .09
MI 25 4S		1.563 39.7	+0/-.0005 +0/-.013	1.874 47.6	+0/-.0006 +0/-.015	1.260 32.0	.06 2	1.563 39.7	1.5621 39.7	+0/-.0005 +0/-.013	.27 .12
MI 25				1.999 50.8	+0/-.0007 +0/-.018	1.260 32.0	.06 2	1.563 39.7	1.562 39.7	+0/-.0005 +0/-.013	.30 .14
MI 26 N	MS 51962-23	1.625 41.3	+0/-.0005 +0/-.013	1.999 50.8	+0/-.0007 +0/-.018	1.010 25.7	.06 2	1.6255 41.3	1.6246 41.3	+0/-.0005 +0/-.013	.30 .14
MI 26						1.260 32.0	.06 2	1.6255 41.3	1.6246 41.3	+0/-.0005 +0/-.013	.38 .17
MI 26 2S				1.936 49.2	0/-.0007 +0/-.018	1.260 32.0	.06 2	1.6255 41.3	1.625 41.3	+0/-.0005 +0/-.013	.30 .14
MI 27 N		1.688 42.9	+0/-.0005 +0/-.013	1.999 50.8	+0/-.0007 +0/-.018	1.010 25.7	.06 2	1.688 42.9	1.6871 42.9	+0/-.0005 +0/-.013	.30 .14
MI 27						1.260 32.0	.06 2	1.688 42.9	1.687 42.9	+0/-.0005 +0/-.013	.32 .15

McGILL® Machined Inner Rings

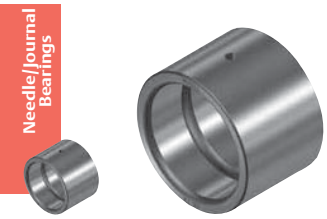

Basic Construction Type: Thru Hardened Precision Ground Rings

Bearing Material: Bearing Quality Steel

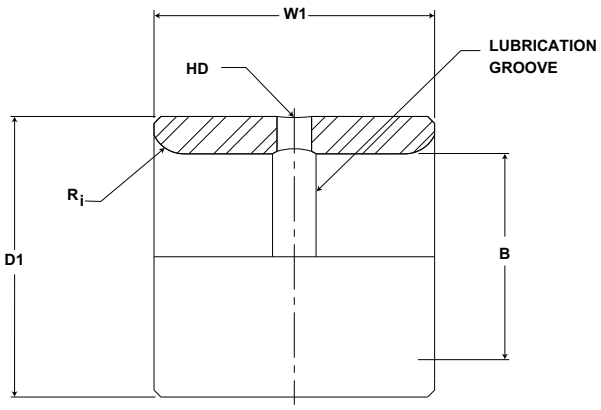

MI Series (continued)

Part No.	Military No.	B		D1		W1	Ri	Recommended Shaft Diameter with Inner Ring			Inner Weight
		Bore Diameter		Outside Diameter		Width	Inner Ring Corner				
		inch mm		inch mm		inch mm		inch mm			lb kg
Inner Ring		Nom	Tol.	Nom	Tol.	Tol +0/-.005 (+0/.13)	(Ref)	Rotating	Stationary	Tol.	
MI 27 N		1.688 42.9	+0/-.0005 +0/-.013	1.999 50.8	+0/-.0007 +0/-.018	1.010 25.7	.06 2	1.688 42.9	1.6871 42.9	+0/-.0005 +0/-.013	.32 .15
MI 28	MS 51962-25					1.760 44.7	.06 2	1.751 44.5	1.750 44.5	+0/-.0005 +0/-.013	.63 .29
MI 30		1.875 47.6	+0/-.0005 +0/-.013	2.249 57.1	+0/-.0007 +0/-.018	1.760 44.7	.06 2	1.8755 47.7	1.8746 47.6	+0/-.0005 +0/-.013	.85 .39
MI 31	MS 51962-26	1.938 49.2	+0/-.0005 +0/-.013	2.249 57.1	+0/-.0007 +0/-.018	1.510 38.4	.08 2	1.938 49.2	1.9371 49.2	+0/-.0005 +0/-.013	.97 .43
MI 32 N	MS 51962-27	2.000 50.8	+0/-.0005 +0/-.013	2.249 57.1	+0/-.0007 +0/-.018	1.510 38.4	.08 2	2.0005 50.8	1.9996 50.8	+0/-.0005 +0/-.013	.74 .33
MI 32						1.760 44.7	.08 2	2.001 50.8	2.000 50.8	+0/-.0005 +0/-.013	.87 .39
MI 34		2.125 54.0	+0/-.0006 +0/-.015	2.249 57.1	+0/-.0007 +0/-.018	1.760 44.7	.08 2	2.1258 54.0	2.1247 54.0	+0/-.0008 +0/-.020	1.00 .45
MI 35	MS 51962-28	2.188 55.6	+0/-.0006 +0/-.015	2.749 69.8	+0/-.0007 +0/-.018	1.510 38.4	.08 2	2.1883 55.6	2.1872 55.6	+0/-.0008 +0/-.020	1.06 .48
MI 36 N	MS 51962-29	2.250 57.2	+0/-.0006 +0/-.015	2.749 69.8	+0/-.0007 +0/-.018	1.510 38.4	.08 2	2.2508 57.2	2.2497 57.2	+0/-.0008 +0/-.020	.83 .37
MI 36						1.760 44.7	.08 2	2.2508 57.2	2.2497 57.2	+0/-.0008 +0/-.020	.97 .44
MI 38	MS 51962-30	2.375 60.3	+0/-.0006 +0/-.015	2.999 76.2	+0/-.0007 +0/-.018	1.760 44.7	.08 2	2.3758 60.4	2.3747 60.3	+0/-.0008 +0/-.020	1.28 .58
MI 39		2.438 61.9	+0/-.0006 +0/-.015	2.999 76.2	+0/-.0007 +0/-.018	1.510 38.4	.08 2	2.4383 62.0	2.4372 61.9	+0/-.0008 +0/-.020	1.05 .47
MI 40 N	MS 51962-31	2.500 63.5	+0/-.0006 +0/-.015	2.999 76.2	+0/-.0007 +0/-.018	1.510 38.4	.08 2	2.5008 63.5	2.4997 63.5	+0/-.0008 +0/-.020	.92 .43
MI 40						1.760 44.7	.08 2	2.501 63.5	2.500 63.5	+0/-.0008 +0/-.020	1.07 .48
MI 42		2.625 66.7	+0/-.0006 +0/-.015	3.249 82.5	+0/-.0009 +0/-.023	1.760 44.7	.08 2	2.6258 66.7	2.6247 66.7	+0/-.0008 +0/-.020	1.12 .51
MI 44	MS 51962-32	2.750 69.9	+0/-.0006 +0/-.015	3.249 82.5	+0/-.0009 +0/-.023	1.760 44.7	.08 2	2.7508 69.9	2.7497 69.9	+0/-.0008 +0/-.020	1.17 .53
MI 46		2.875 73.1	+0/-.0006 +0/-.015	3.499 88.9	+0/-.0009 +0/-.023	2.010 51.1	.08 2	2.8758 73.1	2.8747 73.0	+0/-.0008 +0/-.020	1.30 .59
MI 47	MS 51962-34	2.938 74.6	+0/-.0006 +0/-.015	3.499 88.9	+0/-.0009 +0/-.023	2.010 51.1	.08 2	2.9383 74.7	2.9372 74.6	+0/-.0008 +0/-.020	1.58 .72
MI 48 N		3.000 76.2	+0/-.0006 +0/-.015	3.499 88.9	+0/-.0009 +0/-.023	1.760 44.7	.08 2	3.0008 76.3	2.9997 76.2	+0/-.0008 +0/-.020	1.32 .59
MI 48						2.010 51.1	.08 2	3.001 76.3	3.000 76.2	+0/-.0008 +0/-.020	1.43 .65
MI 50	MS 51962-35	3.125 79.4	+0/-.0006 +0/-.015	3.749 95.3	+0/-.0009 +0/-.023	2.010 51.1	.10 3	3.126 79.4	3.1246 79.4	+0/-.0010 +0/-.025	1.88 .85
MI 52	MS 51962-36	3.250 82.6	+0/-.0006 +0/-.015	3.749 95.3	+0/-.0009 +0/-.023	2.010 51.1	.10 3	3.251 82.6	3.2496 82.6	+0/-.0010 +0/-.025	1.52 .69

Metric dimensions for reference only.
Not all parts are available from stock. Please contact customer service for availability (800) 626-2120.
For more information on bearing capabilities outside of our standard offering, please contact Application Engineering (800) 626-2093.

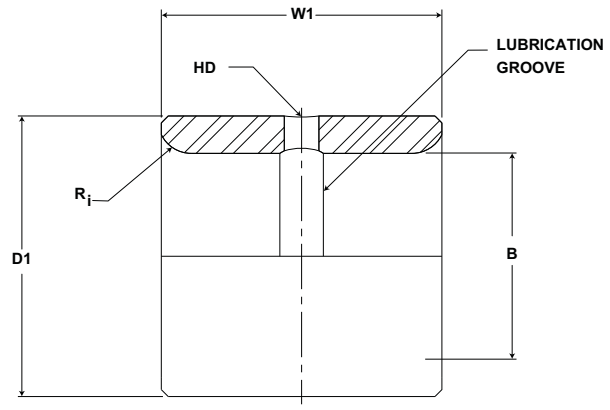

MI Series (continued)

Part No.	Military No.	B Bore Diameter		D1 Outside Diameter		W1 Width	Ri Inner Ring Corner	Recommended Shaft Diameter with Inner Ring			Inner Weight
		inch mm		inch mm		inch mm		inch mm			lb kg
Inner Ring		Nom	Tol.	Nom	Tol.	Tol +0/-.005 (+0/.13)	(Ref)	Rotating	Stationary	Tol.	
MI 54	MS 51962-38	3.375 85.8	+0/-.0008 +0/-.020	3.999 101.6	+0/-.0009 +0/-.023	2.010 51.1	.10 3	3.3758 85.8	3.3746 85.7	+0/-.0010 +0/-.025	2.04 .93
MI 56		3.500 88.9	+0/-.0008 +0/-.020	3.999 101.6	+0/-.0009 +0/-.023	2.010 51.1	.10 3	3.5008 89.0	3.4996 88.9	+0/-.0010 +0/-.025	1.63 .74
MI 56 8G				4.249 108.0	+0/-.0009 +0/-.023	2.010 51.1	.10 3	3.501 89.0	3.500 88.9	+0/-.0010 +0/-.025	1.67 .75
MI 58		3.625 92.1	+0/-.0008 +0/-.020	4.249 108.0	+0/-.0009 +0/-.023	2.010 51.1	.10 3	3.6258 92.1	3.6246 92.1	+0/-.0010 +0/-.025	1.70 .77
MI 60	MS 51962-40	3.750 95.3	+0/-.0008 +0/-.020	4.249 108.0	+0/-.0009 +0/-.023	2.010 51.1	.10 3	3.7508 95.3	3.7496 95.3	+0/-.0010 +0/-.025	1.75 .79
MI 62		3.875 98.5	+0/-.0008 +0/-.020	4.499 114.3	+0/-.0009 +0/-.023	2.260 57.4	.10 3	3.876 98.5	3.875 98.5	+0/-.0010 +0/-.025	3.25 1.47
MI 64		4.000 101.6	+0/-.0008 +0/-.020	4.999 127.0	+0/-.0010 +0/-.025	2.260 57.4	.10 3	4.001 101.7	4.000 101.6	+0/-.0010 +0/-.025	4.38 1.99
MI 68		4.250 108.0	+0/-.0008 +0/-.020	4.999 127.0	+0/-.0010 +0/-.025	2.260 57.4	.10 3	4.251 108.0	4.250 108.0	+0/-.0010 +0/-.025	5.24 2.37
MI 72 N	MS 51962-43	4.500 114.3	+0/-.0008 +0/-.020	5.499 139.7	+0/-.0010 +0/-.025	2.515 63.9	.10 3	4.501 114.4	4.500 114.3	+0/-.0010 +0/-.025	5.43 2.47
MI 72	MS 51962-44					3.015 76.6	.10 3	4.501 114.4	4.500 114.3	+0/-.0010 +0/-.025	5.97 2.71
MI 80 N	MS 51962-46	5.000 127.1	+0/-.0010 +0/-.025	5.998 152.4	+0/-.0010 +0/-.025	2.515 63.9	.12 3	5.001 127.1	5.000 127.0	+0/-.0010 +0/-.025	5.97 2.71
MI 80						2.010 51.1	.10 3	3.501 89.0	3.500 88.9	+0/-.0010 +0/-.025	7.12 3.23
MI 88 N	MS 51962-48	5.500 139.8	+0/-.0010 +0/-.025	6.498 165.1	+0/-.0010 +0/-.025	2.515 63.9	.12 3	5.501 139.8	5.500 139.7	+0/-.0010 +0/-.025	6.30 2.88
MI 88	MS 51962-49					3.015 76.6	.12 3	5.501 139.8	5.500 139.7	+0/-.0010 +0/-.025	7.56 3.54
MI 96	MS 51962-50	6.000 152.5	+0/-.0010 +0/-.025	7.248 184.2	+0/-.0012 +0/-.030	3.015 76.6	.12 3	6.001 152.5	6.000 152.4	+0/-.0012 +0/-.030	11.06 5.03
MI 104		6.500 165.2	+0/-.0010 +0/-.025	7.748 196.9	+0/-.0012 +0/-.030	3.015 76.6	.12 3	6.501 165.2	6.500 165.2	+0/-.0012 +0/-.030	11.90 5.39
MI 112		7.000 177.9	+0/-.0010 +0/-.025	8.248 209.6	+0/-.0012 +0/-.030	3.015 76.6	.12 3	7.001 177.9	7.000 177.9	+0/-.0012 +0/-.030	12.70 5.77
MI 120		7.500 190.6	+0/-.0012 +0/-.030	8.748 222.3	+0/-.0012 +0/-.030	3.015 76.6	.16 4	7.501 190.6	7.500 190.6	+0/-.0012 +0/-.030	13.60 6.17
MI 128		8.000 203.3	+0/-.0012 +0/-.030	9.248 235.0	+0/-.0012 +0/-.030	3.015 76.6	.16 4	8.001 203.3	8.000 203.3	+0/-.0012 +0/-.030	14.40 6.55

McGill MULTI-ROL Needle Bearings

Full complement needle bearing provides high radial load rating with good shaft support, angular rigidity, and is dimensionally equivalent to most plain bearings with bronze or babbitt bushing. Available in both single and two row designs with non separable inner race and metallic shields for pure radial load applications. The angular lube groove provides a circumferential path to direct lubricant to the oil hole.

Basic Construction Type: Full Complement Machined Race Needle Bearing and Non Separable Inner Ring

Rolling Elements: Single Row Precision Ground Needle

Bearing Material: Bearing Quality Steel

Seal Type: Metallic Shield

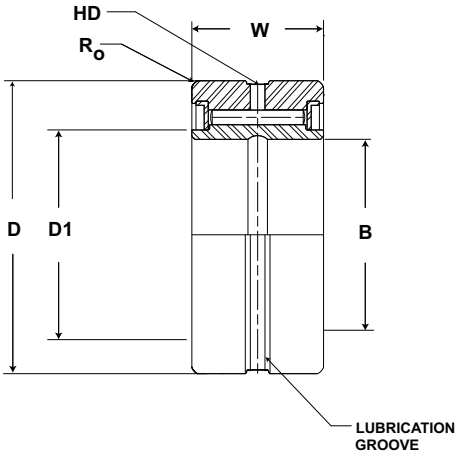

RS Series

Part No.	B		D		W	Housing Bore Diameter			HD	Ro	Limiting Speed (In Oil)*	Basic Dynamic Rating	Basic Static Rating	Weight
Single Row	Bore Diameter		Outside Diameter		Width				Radial Lub. Hole Diameter	Max Hsg Radius to Clear				
	inch mm		inch mm		inch mm	inch mm			inch mm		RPM	lb/N	lb/N	lb kg
	Nom	Tol.	Nom	Tol.	Tol +0/-.005 (+0/.13)	Rotating	Stationary	Tol.	(Ref)	(Ref)				
RS 6	.7500 19.058	+0/-.0004 +0/-.010	1.5000 38.115	+0/-.0005 +0/-.013	.8750 22.234	1.5000 38.115	1.5005 38.128	.0007 0.018	.1250 3.176	.0313 0.794	5,000	3850 17,125	11500 51,152	.26 .12
RS 7	.8750 22.234	+0/-.0005 +0/-.013	1.6250 41.291	+0/-.0005 +0/-.013	1.0000 25.410	1.6250 41.291	1.6255 41.304	.0007 0.018	.1250 3.176	.0313 0.794	4,400	5560 24,731	15550 69,166	.34 .15
RS 8	1.0000 25.410	+0/-.0005 +0/-.013	1.8125 46.056	+0/-.0005 +0/-.013	1.0625 26.998	1.8125 46.056	1.8130 46.068	.0007 0.018	.1250 3.176	.0313 0.794	4,000	6170 27,444	18700 83,178	.42 .19
RS 9	1.1250 28.586	+0/-.0005 +0/-.013	1.9375 49.232	+0/-.0005 +0/-.013	1.0625 26.998	1.9375 49.232	1.9875 50.502	.0007 0.018	.1250 3.176	.0313 0.794	3,600	6500 28,912	20500 91,184	.46 .21
RS 10	1.2500 31.763	+0/-.0005 +0/-.013	2.0625 52.408	+0/-.0006 +0/-.015	1.0625 26.998	2.0625 52.408	2.0630 52.421	.0007 0.018	.1250 3.176	.0313 0.794	3,300	6830 30,380	22400 99,635	.49 .22
RS 12	1.5000 38.115	+0/-.0005 +0/-.013	2.5000 63.525	+0/-.0006 +0/-.015	1.1250 28.586	2.5000 63.525	2.5005 63.538	.0007 0.018	.1250 3.176	.0625 1.588	2,900	7740 34,428	27500 122,320	.83 .37
RS 14	1.7500 44.468	+0/-.0005 +0/-.013	2.7500 69.878	+0/-.0006 +0/-.015	1.1250 28.586	2.7500 69.878	2.7505 69.890	.0007 0.018	.1250 3.176	.0625 1.588	2,500	8330 37,052	31400 139,667	.93 .42
RS 16	2.0000 50.820	+0/-.0005 +0/-.013	3.2500 82.583	+0/-.0006 +0/-.015	1.1875 30.174	3.2499 82.580	3.2505 82.595	.0007 0.018	.1250 3.176	.0625 1.588	2,000	9820 43,679	42200 187,706	1.45 .66
RS 20	2.5000 63.525	+0/-.0006 +0/-.015	3.7500 95.288	+0/-.0008 +0/-.020	1.2500 31.763	3.7498 95.282	3.7507 95.305	.0010 0.025	.1875 4.764	.0938 2.382	1,700	11200 49,818	52900 235,299	1.79 .81
RS 22	2.7500 69.878	+0/-.0006 +0/-.015	4.0000 101.640	+0/-.0008 +0/-.020	1.2500 31.763	3.9998 101.635	4.0007 101.658	.0010 0.025	.1875 4.764	.0938 2.382	1,500	9920 44,124	46700 207,722	2.00 .91
RS 24	3.0000 76.230	+0/-.0006 +0/-.015	4.5000 114.345	+0/-.0008 +0/-.020	1.3750 34.939	4.4998 114.340	4.5007 114.363	.0010 0.025	.1875 4.764	.0938 2.382	1,400	14500 64,496	58100 258,429	2.88 1.31

* For bearing properly filled with #1 grease reduce speed by 50%

Metric dimensions for reference only.
Not all parts are available from stock. Please contact customer service for availability (800) 626-2120.
For more information on bearing capabilities outside of our standard offering, please contact Application Engineering (800) 626-2093.

Basic Construction Type: Full Complement Machined Race Needle Bearing and Non Separable Inner Ring

Rolling Elements: Double Row Precision Ground Needle

Bearing Material: Bearing Quality Steel

Seal Type: Metallic Shield

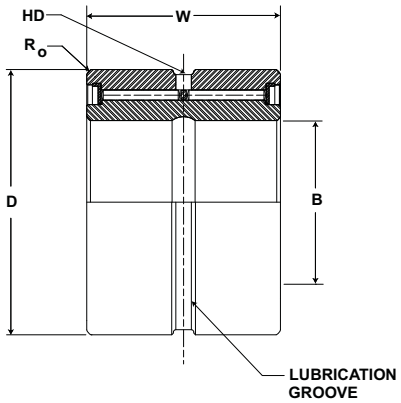

RD Series

Part No.	B		D		W	Housing Bore Diameter			HD	Ro	Limiting Speed (In Oil)*	Basic Dynamic Rating	Basic Static Rating	Weight
Single Row	Bore Diameter		Outside Diameter		Width				Radial Lub. Hole Diameter	Max Hsg Radius to Clear				
	inch mm		inch mm		inch mm	inch mm			inch mm		RPM	lb/N	lb/N	lb kg
	Nom	Tol.	Nom	Tol.	Tol +0/-.005 (+0/.13)	Rotating	Stationary	Tol.	(Ref)	(Ref)				
RD 10	1.2500 31.763	+0/-.0005 +0/-.013	2.0625 52.408	+0/-.0006 +0/-.015	2.2500 57.173	2.0625 52.408	2.0630 52.421	.0007 0.018	.1875 4.764	.0313 0.794	3,300	13600 60,493	54300 241,526	1.16 .53
RD 12	1.5000 38.115	+0/-.0005 +0/-.013	2.5000 63.525	+0/-.0006 +0/-.015	2.3750 60.349	2.5000 63.525	2.5005 63.538	.0007 0.018	.1875 4.764	.0625 1.588	2,900	15200 67,610	65700 292,234	1.83 .83
RD 14	1.7500 44.468	+0/-.0005 +0/-.013	2.7500 69.878	+0/-.0006 +0/-.015	2.3750 60.349	2.7500 69.878	2.7505 69.890	.0007 0.018	.1875 4.764	.0625 1.588	2,500	16400 72,947	75100 334,045	2.06 .93
RD 16	2.0000 50.820	+0/-.0005 +0/-.013	3.2500 82.583	+0/-.0006 +0/-.015	2.3750 60.349	3.2499 82.580	3.2505 82.595	.0007 0.018	.1875 4.764	.0625 1.588	2,000	18300 81,398	94000 418,112	3.09 1.40
RD 18	2.2500 57.173	+0/-.0005 +0/-.013	3.5000 88.935	+0/-.0008 +0/-.020	2.5000 63.525	3.4998 88.930	3.5007 88.953	.0010 0.025	.1875 4.764	.0625 1.588	1,800	19200 85,402	102600 456,365	3.57 1.62
RD 20	2.5000 63.525	+0/-.0006 +0/-.015	3.7500 95.288	+0/-.0008 +0/-.020	2.5000 63.525	3.7498 95.282	3.7507 95.305	.0010 0.025	.1875 4.764	.0938 2.382	1,700	20800 92,518	117000 520,416	3.8 1.72
RD 24	3.0000 76.230	+0/-.0006 +0/-.015	4.5000 114.345	+0/-.0008 +0/-.020	2.7500 69.878	4.4998 114.340	4.5007 114.363	.0010 0.025	.1875 4.764	.0938 2.382	1,400	29400 130,771	144500 642,736	6.14 2.78
RD 28	3.5000 88.935	+0/-.0008 +0/-.020	5.0000 127.050	+0/-.0010 +0/-.025	3.0000 76.230	5.0003 127.058	5.0011 127.078	.0015 0.038	.1875 4.764	.0938 2.382	1,250	34400 153,011	184900 822,435	7.54 3.42
RD 32	4.0000 101.640	+0/-.0008 +0/-.020	5.5000 139.755	+0/-.0010 +0/-.025	3.0000 76.230	5.5003 139.763	5.5011 139.783	.0015 0.038	.1875 4.764	.0938 2.382	1,100	34600 153,901	194600 865,581	8.29 3.76

* For bearing properly filled with #1 grease reduce speed by 50%