TELERACE

TELESCOPIC SLIDES RANGE

The TLR., TLQ. telescopic slides series are designed for applications with motorized movement, requiring high frequency and smooth movement, this thanks to double-row bearings, hardened and honed raceways.
All features not obtainable with ball-cage telescopic slides. The TLR slides allow unique self-aligning capability in pairs. The slides incorporate wipers and pre-oiled felt to assure clear and lubricated raceways. They are also suitable for vertical movement. The TLSX, TSQX versions are for corrosive ambients, made completely in INOX, except the rails, which are protected with T RACE-NOX anticorrosion treatment.

TLR

TLQ

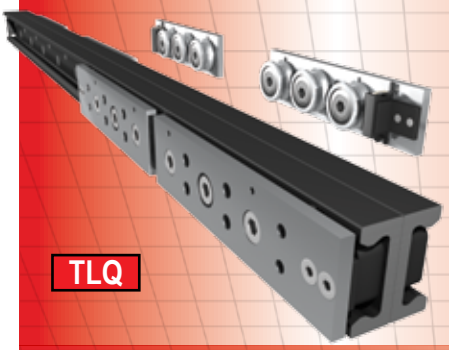

Max. load capacity pair (N)

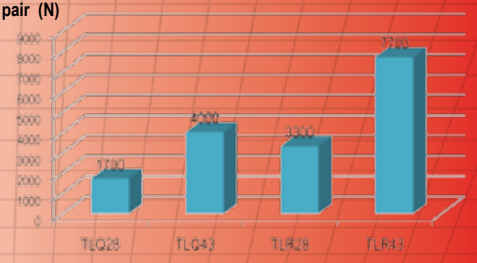

The ballcage telescopic slides series TLS., TSQ. are robust full stroke telescopic slides for heavy duty application with minimal flexion. The optimized design and hardened raceways provide superior performance at competitive prices, compared to traditional zinc plated induction hardened slides.
The TLSX, TSQX version are suitable for critical corrosion environments; the balls, the cages and the intermediate beam are made in INOX, while the rails are corrosion protected with T RACE's innovative T RACE-NOX treatment.
The SR series is a semi-telescopic slide, that allows a half stroke on each side. It is also the basic components to obtain the TLS and TSQ full stroke telescopic slides. For corrosive ambients the SRX version is available.

TLS

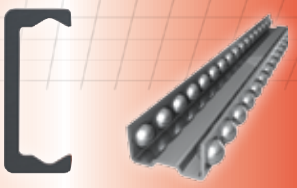

TSQ

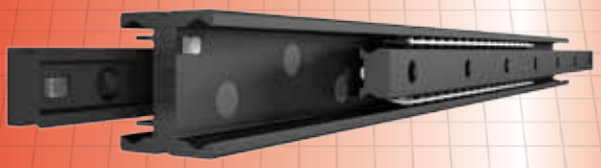

Max. load capacity pair (N)

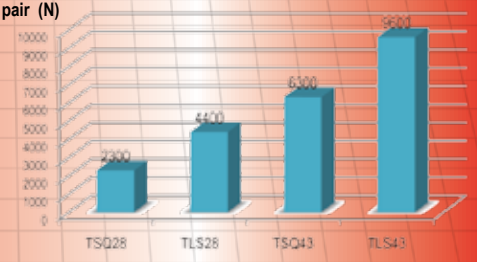

SR

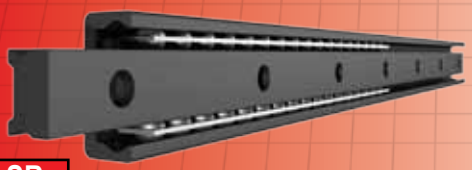

The TLA. TQA. telescopic slides series are available in two material: Standard TLAZ, TQAZ made in zinc plated steel with hardened bearings, and the full INOX version TLAX, TQAX with rail made in AISI304 and the roller AISI440 for high corrosion resistance. These roller telescopic slides are designed for general lower medium load applications, requiring smooth and stable movement, at a lower price range.

TLAZ

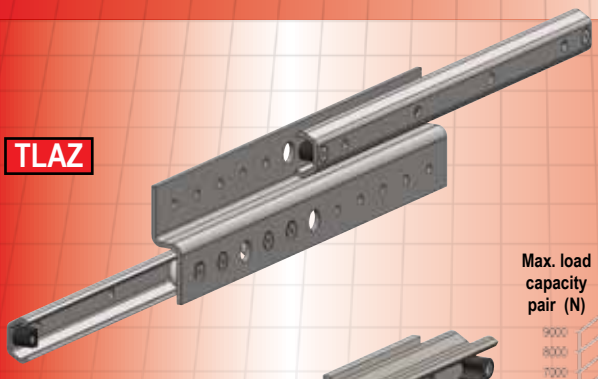

TQAZ

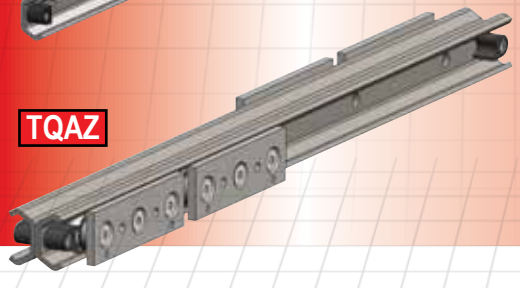

Max. load capacity pair (N)

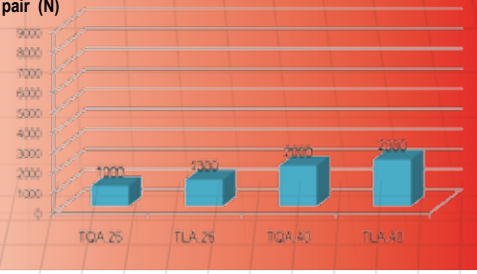

TELESCOPIC SLIDES

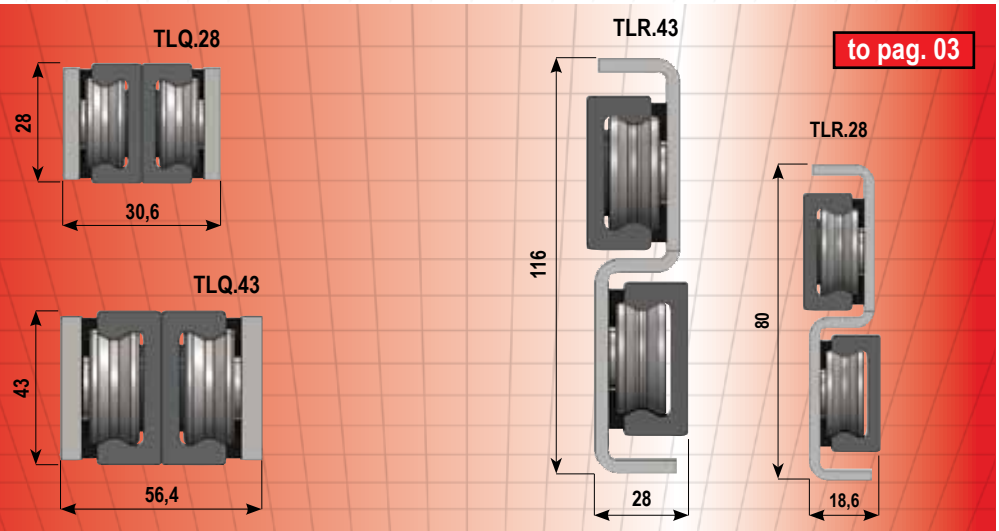

to pag. 03

- *For medium high loads*
- *Self-aligning feature for smoothest and most silent movement*
- *Rigid with low flexion*
- *Stoppers*
- *High speed, in particular with optional synchronism*
- *For automation applications with frequent and variable stroke*
- *Hardened raceways*
- *Available with INOX rollers*
- *Vertical use*

to pag. 10

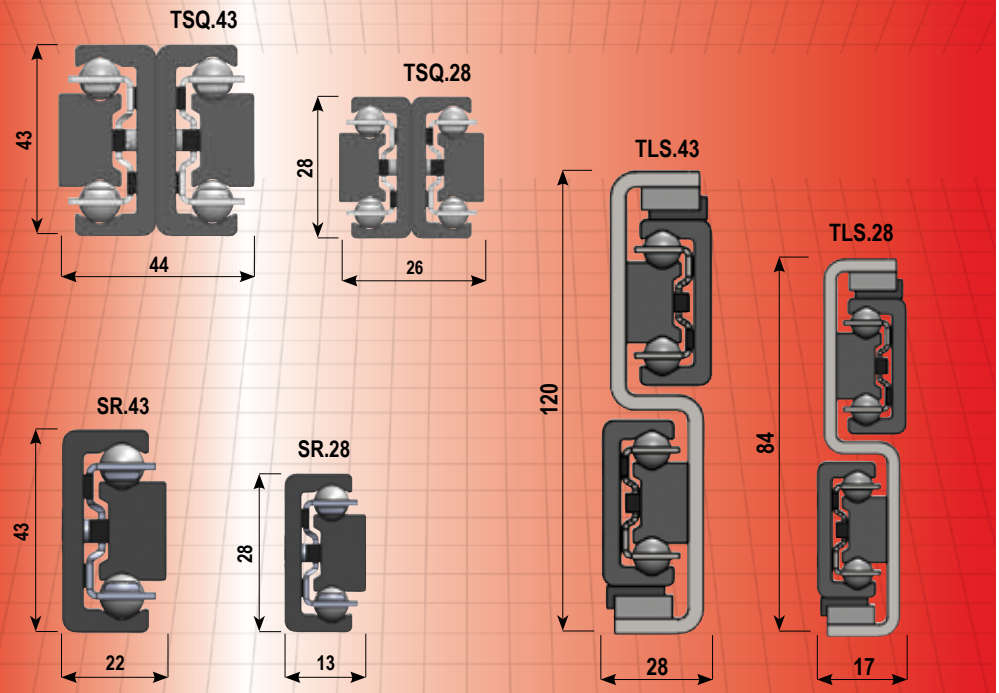

- *For Heavy Duty loads*
- *Highest rigidity and lowest flexion*
- *Smooth movement*
- *High resistance to vibrations*
- *Hardened raceways*
- *Min. extension & closing force*
- *Manual or automation applications with constant complete stroke*
- *Available with INOX components*

to pag. 18

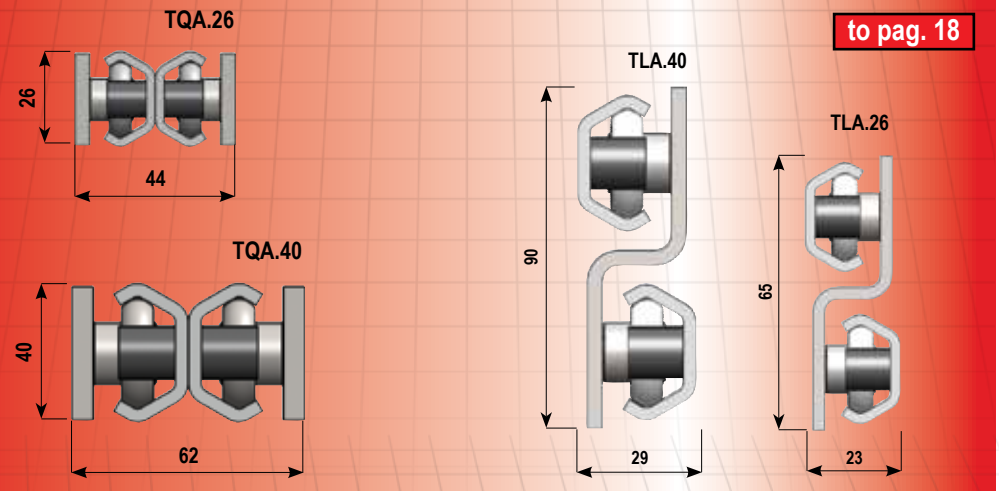

- *For low/medium loads*
- *Economical*
- *Smooth and silent movement*
- *Strong stoppers*
- *Vertical applications*
- *Variable stroke*
- *Available in full INOX version*

Roller telescopic slides TLR, TLR.X

TELERACE
TELESCOPIC SLIDES RANGE

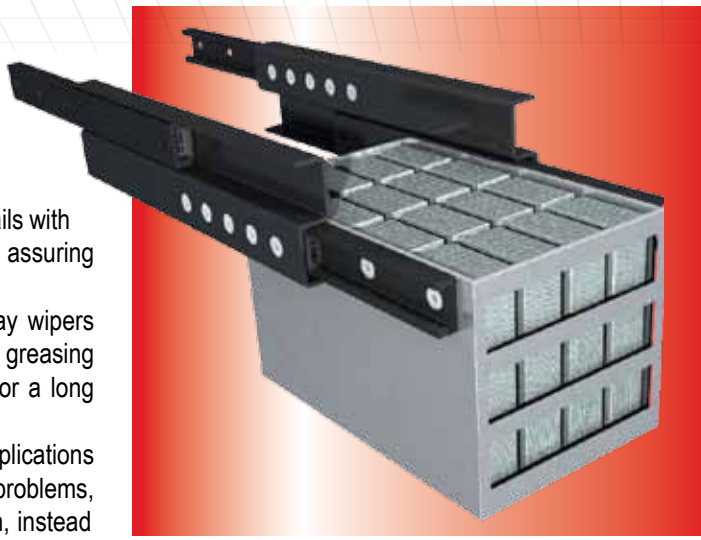

The TLR slides are the world's only telescopic slides system which incorporates self-aligning feature to absorb parallelism errors of the mounting surfaces, when used in pair.
The TLR slides are designed for heavy duty High-Tech telescopic applications, with precise motorized movement, requiring constant smooth sliding performance with no play. Recommend for high frequency applications.
The high performance is provide by use of double-row precision bearings, strong rails with hardened and honed raceways, fixed to a rigid intermediate S-shaped steel plate, assuring high load capacities and low flexion at even fully extended position.
The TLR slides guarantee maintenance free operation, thanks to strong raceway wipers and longitudinal seals for dust and impurity protection. An integrated lubed for-life greasing system, assuring a constant thin layer of lubrication on the raceway surfaces, for a long operation period.
TLR system offers unique possibilities and benefits for all kind of automation applications with variable strokes, for which a ball-cage slide often have ball-cage creeping problems, friction problems to reach full extension, as ball-cage is forced out to end position, instead of rolling.

TLRX slides for corrosive ambients

For corrosive ambientss is available TLRX, with all components and intermediate element in INOX, except the rails, which have T RACE NOX anti-corrosion treatment; a oxidation treatment and impregnation in hot oil, to offer a good corrosion resistance.

Extension

The TLR slides allow for an extension equal to the closed slide plus a small constant.
The extension is obtained by movement of the intermediate element and the lower rail, while the upper rail is fixed to structure.
As it can been seen on left figure, the movement of the lower rail is more than the upper rail, due to optimizing of load capacity and the fact that the rollers are positioned on the intermediate element to offer max load capacity in this position. Hereby the TLR slides are asymmetric, so the slides must be ordered as left side slide TLRS and right side slide TLRD and when installed the product code must be on top side.
The load capacities are all indicated per single rail, with centered load position, equal to half the rail in extended position.

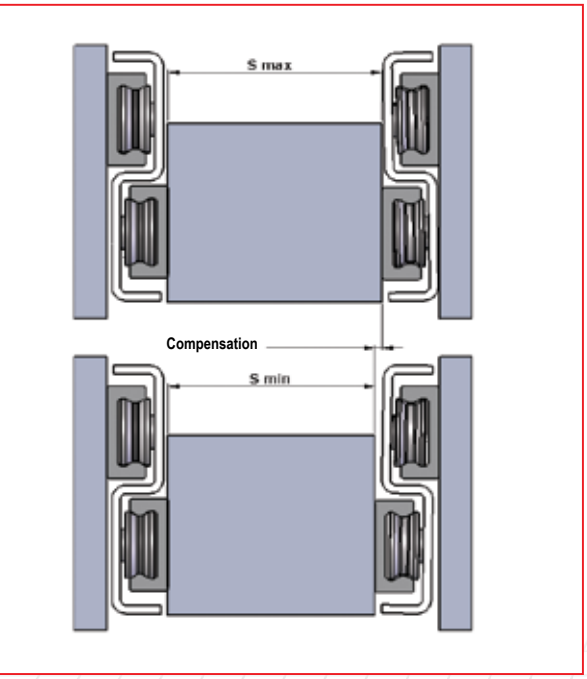

Self-aligning capacity

When TLR slides are used in pair, they offer the possibility to absorb minor structural errors or non-precise installation, which otherwise would much increase the required force for moving the mobile part, in both extending and closing direction. A typical problem for ball-cage telescopic slides.
Using a pair of self-aligning TLR slides, smooth low friction movement is assured, along with a more easy installation and/or less precise workings of structure, i.e. cost savings.
The self-aligning feature is obtained by having a combination of floating rollers and guiding rollers in the TLR..A. i.e. allowing for a minor rotation of the rails, maintaining the preload in both upper and lower rails of the TLR..A slide.
The suffix A in TLR..A, indicates "Aligning" The concept is well illustrated in the catalogue section MONORACE , for which the base components have their origin.
To be noted that the rotation of the TLR..A slide hereby changes the nominal value of 18,6mm to 17,2mmm (S min) – 19,0mm (S max) while compensating dimensional errors on mobile structure or distance errors between the two lateral sides of fixed structure, for which the upper rails are fixed to. Herewith avoiding binding-problems, with would much increased friction force, with consequent reduced load capacity and expected life-time.

The TLR..A is in general always used in pair with a standard TLR, to assure good lateral stability. However good self-aligning can also be obtained for movement of vertical panels, with use of TLR..A at top to absorb some mis-alignment, and with some retainer guidance at lower part. Please refer to page 26, for further information.

Roller telescopic slides TLR28, TLRX28

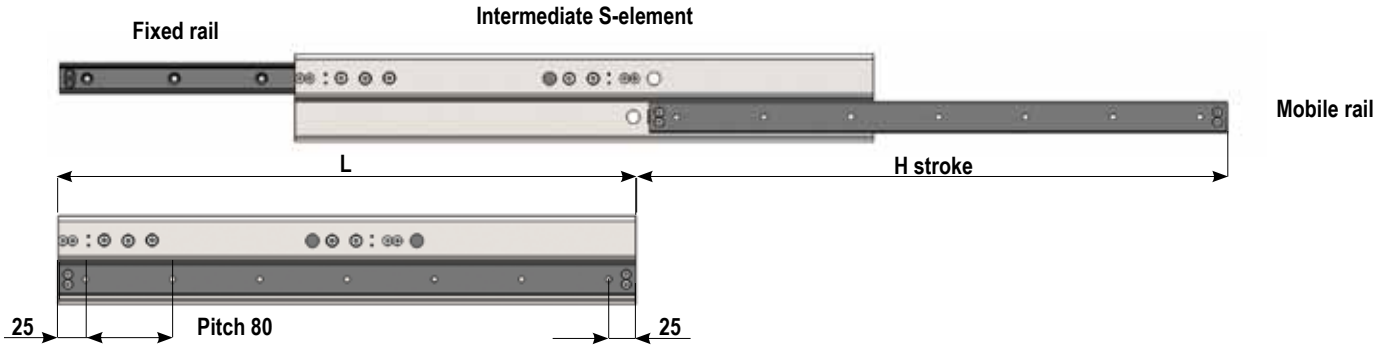

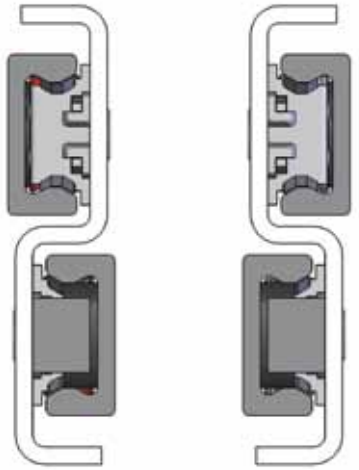

Left version TLRS.28.

Right version TLRD.28.

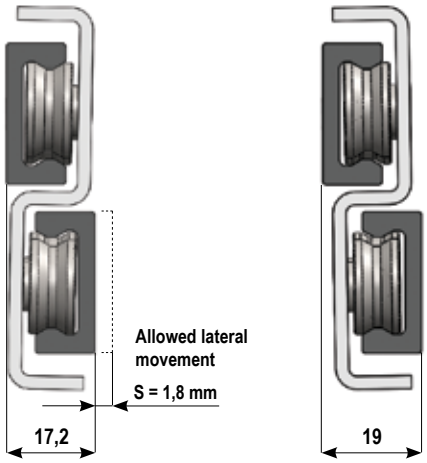

Self-aligning version with floating rollers to allow rotation TLR..28A

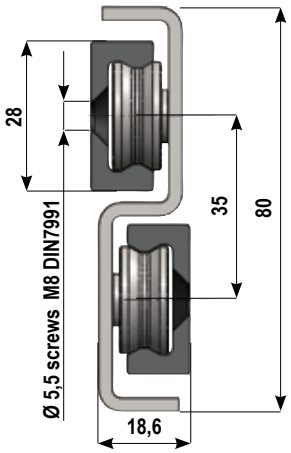

Standard version with rigid/guiding rollers TLR..28

Code	Lenght. L (mm)	Stroke H (mm)	Coeff. dynamic C (N)	Load capacity Co rad (N)	Weight (kg)
TLR..28.-370	370	380	1578	798	2,1
TLR..28.-450	450	460	1859	940	2,5
TLR..28.-530	530	540	2044	1034	2,9
TLR..28.-610	610	620	2711	1371	3,3
TLR..28.-690	690	700	2933	1483	3,7
TLR..28.-770	770	780	3083	1560	4,1
TLR..28.-850	850	860	3180	1608	4,5
TLR..28.-930	930	940	3259	1631	4,9
TLR..28.-1010	1010	1020	3325	1519	5,3
TLR..28.-1090	1090	1100	3380	1421	5,7
TLR..28.-1170	1170	1180	3428	1334	6,1
TLR..28.-1250	1250	1260	3469	1258	6,5
TLR..28.-1330	1330	1340	3505	1190	6,9
TLR..28.-1410	1410	1420	3537	1129	7,3
TLR..28.-1490	1490	1500	3565	1073	7,7

For corrosive ambientss is available TLRX28, with all components and intermediate element in INOX, except the rail, which have T RACE NOX anti-corrosion treatment; a oxidation treatment and impregnation in hot oil, to offer a good corrosion resistance. Same dimension and performance as standard version TLR28.

Order code ex. :
TLRD28-370 = standard rigid right slide, length 370mm
TLRS28A-370 = self-aligning left slide, length 370mm
TLRDX28A-370 = self-aligning INOX right slide, length 370mm

The above listed load capacities Co rad, are per single slide, with the load centered, i.e. in the middle of the extended lower rail, P. In case the load is not centered, ex. The load is more towards tip, the load capacity is reduced, - please refer to page 26. For further info and flexion "f" indications.
TLR slides must be installed with the code mark and upper rail at top-side, while mobile part is fixed to lower rail.

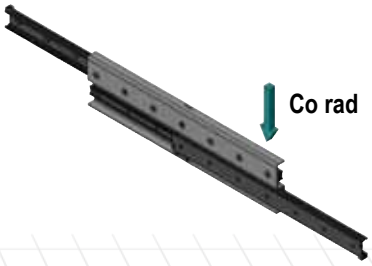

Roller telescopic slides TLR43, TLRX43

TELERACE
TELESCOPIC SLIDES RANGE

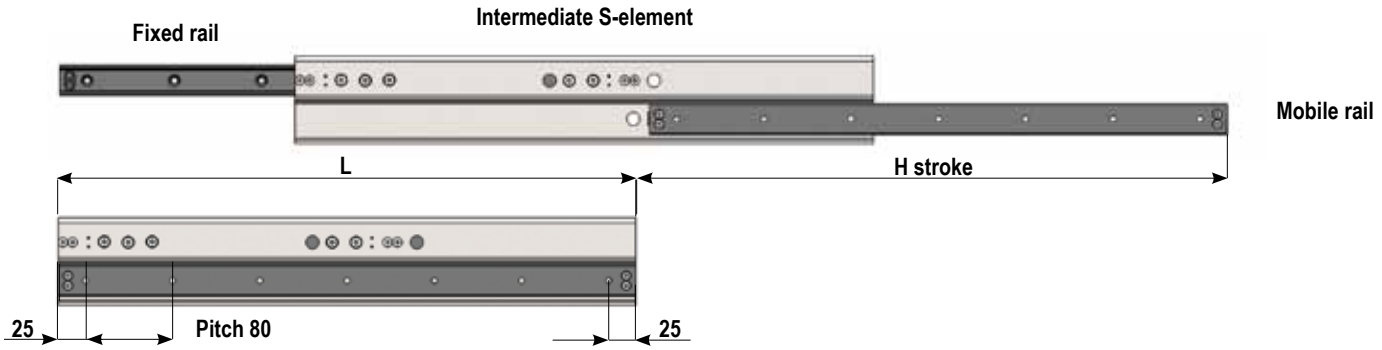

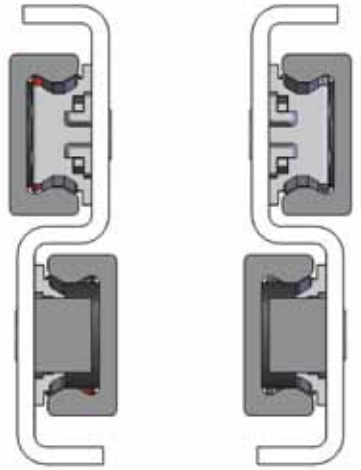

Left version TLRS.43.

Right version TLRD.43.

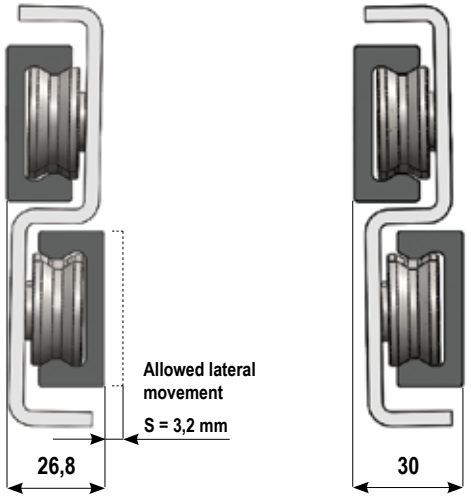

Self-aligning version with floating rollers to allow rotation TLR..43A

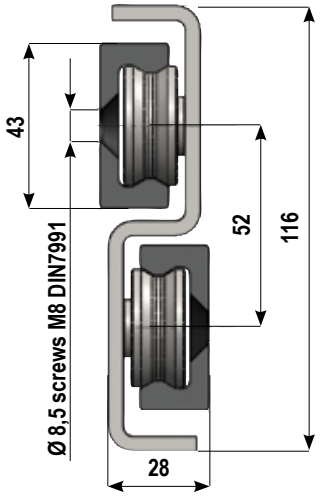

Standard version with rigid/guiding rollers TLR..43

Code	Lenght. L (mm)	Stroke H (mm)	Coeff. dynamic C (N)	Load capacity Co rad (N)	Weight (kg)
TLR..43.-530	530	540	4074	2078	6,4
TLR..43.-610	610	620	4241	2163	7,3
TLR..43.-690	690	700	6154	3139	8,2
TLR..43.-770	770	780	6553	3342	9,1
TLR..43.-850	850	860	6869	3504	10
TLR..43.-930	930	940	7127	3635	10,9
TLR..43.-1010	1010	1020	7340	3744	11,8
TLR..43.-1090	1090	1100	7520	3835	12,7
TLR..43.-1170	1170	1180	7673	3784	13,6
TLR..43.-1250	1250	1260	7806	3574	14,5
TLR..43.-1330	1330	1340	7922	3386	15,4
TLR..43.-1410	1410	1420	8024	3217	16,3
TLR..43.-1490	1490	1500	8114	3064	17,2
TLR..43.-1570	1570	1580	8195	2925	18,1
TLR..43.-1650	1650	1660	8267	2798	19
TLR..43.-1730	1730	1740	8333	2682	19,9
TLR..43.-1810	1810	1820	8392	2574	20,8
TLR..43.-1890	1890	1900	8447	2476	21,7
TLR..43.-1970	1970	1980	8496	2384	22,6

For corrosive ambients is available TLRX43, with all components and intermediate element in INOX, except the rail, which have T RACE NOX anti-corrosion treatment; a oxidation treatment and impregnation in hot oil, to offer a good corrosion resistance. Same dimension and performance as standard version TLR43 .

Order code ex. :
TLRD43-530 = standard rigid right slide, length 530mm
TLRS43A-530 = self-aligning left slide, length 530mm
TLRDX43A-530 = self-aligning INOX right slide, length 530mm

The above listed load capacities Co rad, are per single slide, with the load centered, i.e. in the middle of the extended lower rail, P. In case the load is not centered, ex. The load is more towards tip, the load capacity is reduced, - please refer to page 26. For further info and flexion "f" indications.
TLR slides must be installed with the code mark and upper rail at top-side, while mobile part is fixed to lower rail.

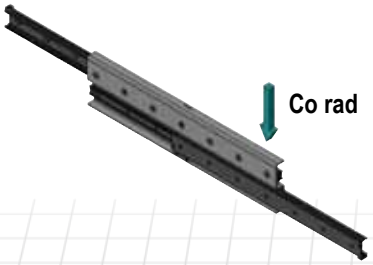

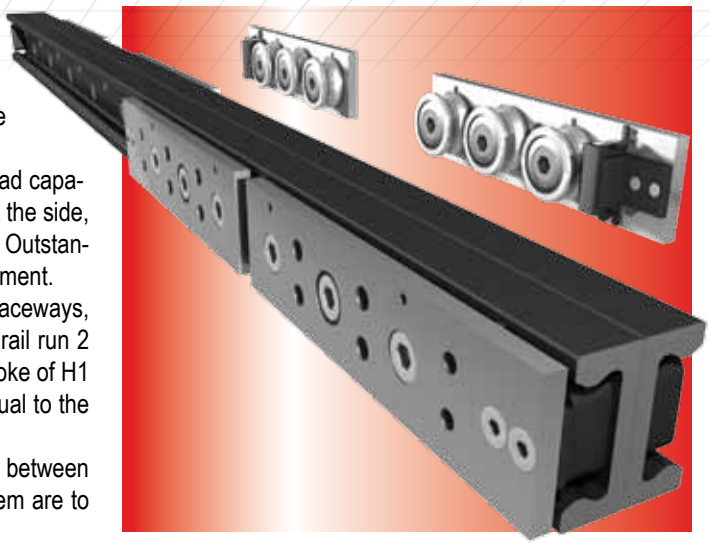

The very compact TLQ telescopic slides are designed for High-Tech telescopic applications with precise motorized movement, requiring constant smooth sliding performance with no play.
The unique concept for TLQ, is that it allows customer, to set the desired stroke precisely as wanted, based on complete standard product.
The TLQ telescopic slides offer both high radial load capacities, and good axial load capacities. The rail/slider configuration allows the TLQ slides to be mounted not only at the side, but also underneath the moving part, when there are space limitations at the sides. Outstanding linear solution for all vertical applications, for both manual or motorized movement.
The squared designed is obtained by using two MR-rails with hardened honed raceways, as the rigid intermediate element, into which the sliders are assembled. In each rail run 2 independent roller sliders, with a certain distance in between them, to obtain a stroke of H1 for fixed rail/sliders and H2 for mobile rail/sliders. Total stroke H = H1 + H2 is ,equal to the total length of the slide.
The sliders to be fixed at structure are longer and positioned with more space in between them. The in general shorter sliders, positioned with less distance in between them are to be fixed at mobile part.
For horizontal applications, the product marking must always be on top, to assure max. radial load capacity.
Unlike TLR slides, for TLQ there is no Right-side / Left side version, just by turning the slide horizontally the slide becomes symmetric.

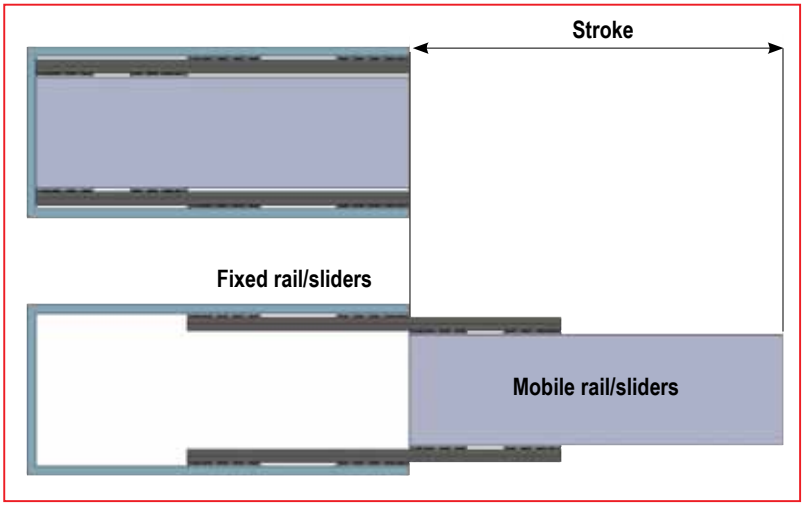

The components for TLQ slides are the same as for TLR slides and MONORACE MR series: High dept nitriding hardened rails, honed raceways, double row bearings, strong wipers with incorporated pre-oiled felt for long lasting lubrication of raceways.
TLQ slides are designed for high frequency applications required min. friction, smooth and stable movement with no play.

The material and its treatment offer a good resistance against corrosion, to allow for installation in outdoor ambients.

TLQX slides for corrosive ambients

For corrosive ambientss is available TLRX, with all components in INOX, except the rail, which have T RACE NOX anti-corrosion treatment; a oxidation treatment and impregnation in hot oil, to offer a good corrosion resistance.

Modified stroke

The standard stroke H for TLQ slides can easily be modified to obtain different stroke, shorter or longer than standard, just by fixing the sliders in a position different than standard A and B indicated in table.
As shown in the table, by increasing the distance A / B 20% stroke decrease by 20%, but load capacity increase by ca 80%.
Otherwise reducing the distance A / B by 20%, the stroke increase by 20%, while load capacity decrease by ca. 40%

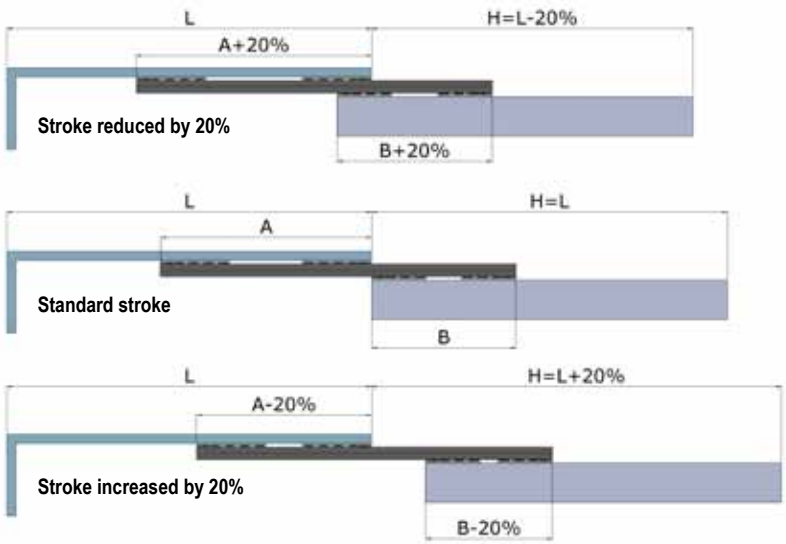

Load capacity increased by 80% *

Standard/nominal load capacity Co rad

Load capacity reduced by 40% *

Indicative values related to individual lengths

Roller telescopic slides TLQ28, TLQX28

TELESCOPIC SLIDES RANGE

TLQ.28 version

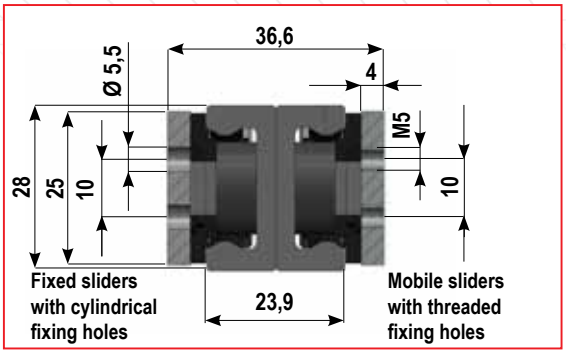

TLQ.28 FF version

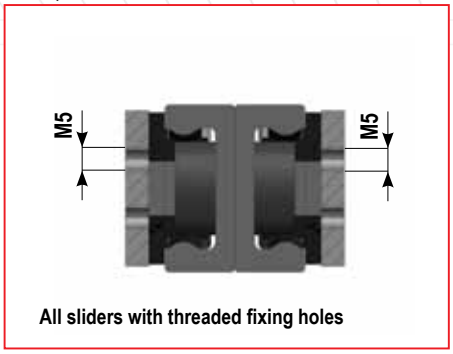

All sliders with threaded fixing holes

TSQ.28 CC version

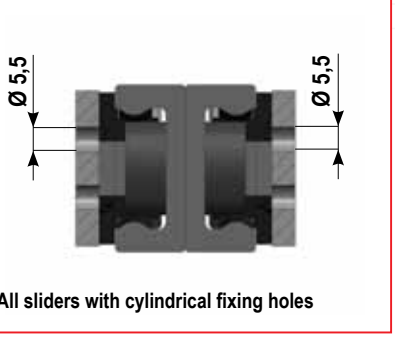

All sliders with cylindrical fixing holes

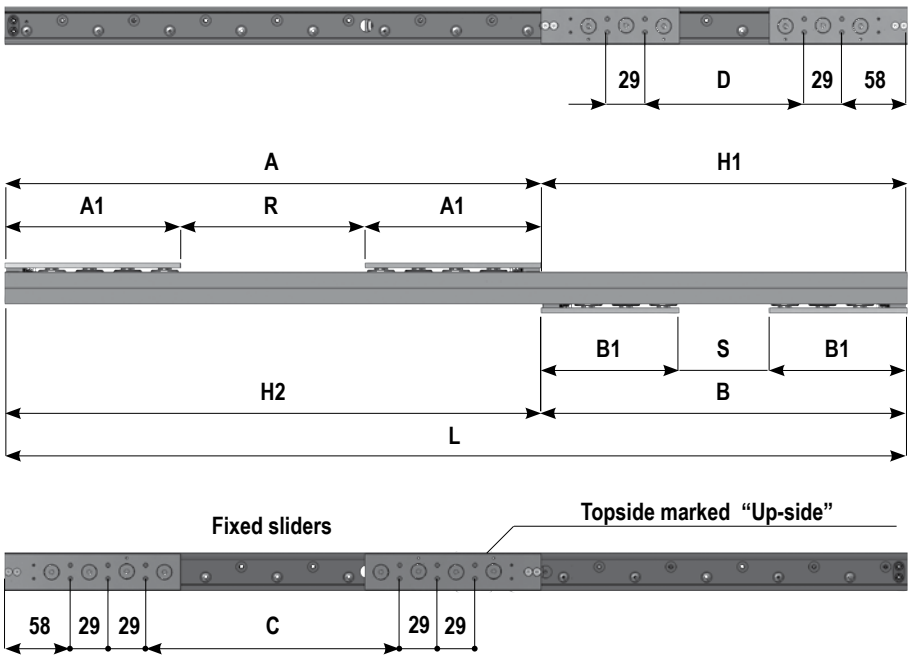

The fixed sliders are marked "Fix slider" while the mobile sliders are marked "Mobile slider" .

Peso dei 4 carrelli: 1,5 kg
Peso della guida: 2,5 kg/m

Code	Lenght. L (mm)	Total stroke H (mm)	Fixed sliders (mm)					Mobile sliders (mm)					Coeff. dyn. C (N)	Load capacity				
			A	A1	C	R	Stroke H1	B	B1	D	S	Stroke H2		Co rad (N)	Co ax (N)	Mx [Nm]	My [Nm]	Mz [Nm]
TLQ.28..-450	450	450	227	111,5	53	4	223	223	111,5	49	0	227	602	464	232	18	128	96
TLQ.28..-530	530	530	307	111,5	133	84	223	223	111,5	49	0	307	1138	877	438	18	128	96
TLQ.28..-610	610	610	360	140,5	128	79	250	250	111,5	76	27	360	1335	1029	404	18	171	128
TLQ.28..-690	690	690	408	140,5	176	127	282	282	111,5	108	59	408	1458	958	366	18	222	158
TLQ.28..-770	770	770	456	140,5	224	175	314	314	111,5	140	91	456	1552	877	335	18	273	158
TLQ.28..-850	850	850	504	140,5	272	223	346	346	111,5	172	123	504	1626	808	309	18	288	158
TLQ.28..-930	930	930	552	140,5	320	271	378	378	111,5	204	155	552	1687	750	286	18	288	158
TLQ.28..-1010	1010	1010	600	140,5	368	319	410	410	111,5	236	187	600	1737	699	267	18	288	158
TLQ.28..-1090	1090	1090	648	140,5	416	367	442	442	111,5	268	219	648	1779	655	250	18	288	158
TLQ.28..-1170	1170	1170	696	140,5	464	415	474	474	111,5	300	251	696	1814	616	235	18	288	158
TLQ.28..-1250	1250	1250	744	140,5	512	463	506	506	111,5	332	283	744	1845	581	222	18	288	158
TLQ.28..-1330	1330	1330	792	140,5	560	511	538	538	111,5	364	315	792	1872	550	210	18	288	158
TLQ.28..-1410	1410	1410	840	140,5	608	559	570	570	111,5	396	347	840	1896	522	200	18	288	158
TLQ.28..-1490	1490	1490	888	140,5	656	607	602	602	111,5	428	379	888	1917	497	190	18	288	158

The TLQX version has same dimensions and performance as standard TLQ .
Order code ex. :
TLQ28-770 = standard version with length 770mm
TLQX28CC-770 = Inox version, with cylindrical fixing holes for all sliders, length 770mm

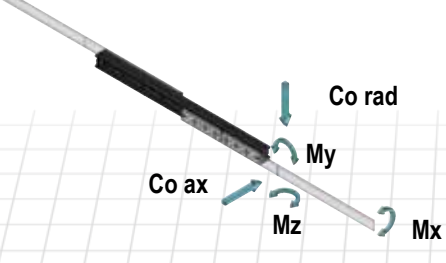

Roller telescopic slides TLQ43, TLQX43

TLQ.43 version

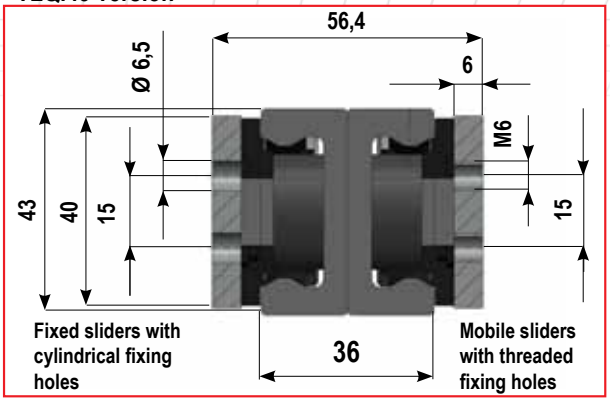

TLQ.43 FF version

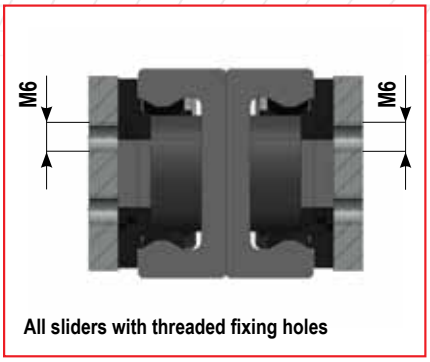

TSQ.43 CC version

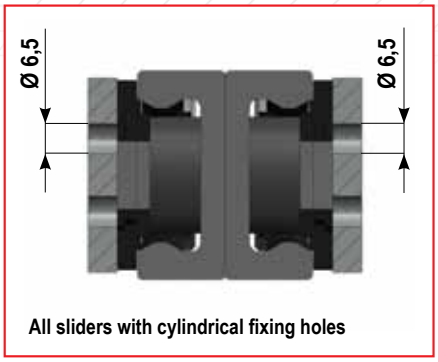

Mobile sliders

The fixed sliders are marked "Fix slider" while the mobile sliders are marked "Mobile slider" .

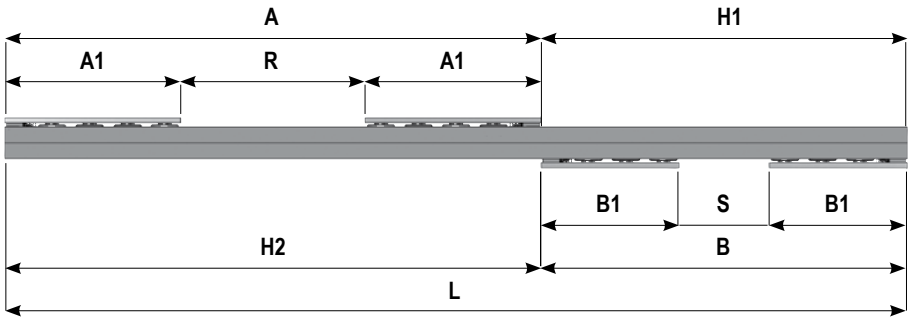

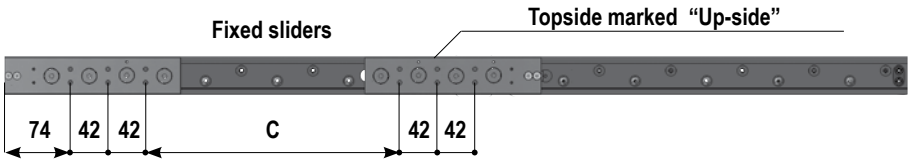

Peso dei 4 carrelli: 2,4 kg
Peso della guida: 6 kg/m

Code	Lenght. L (mm)	Total stroke H (mm)	Fixed sliders (mm)					Mobile sliders (mm)					Coeff. dyn. C (N)	Load capacity				
			A	A1	C	R	Stroke H1	B	B1	D	S	Stroke H2		Co rad (N)	Co ax (N)	Mx [Nm]	My [Nm]	Mz [Nm]
TLQ.43..-610	610	600	310	155	0	142	300	310	155	78	0	300	1529	1114	557	64	432	324
TLQ.43..-690	690	690	374	155	64	140	316	316	155	84	6	374	2326	1695	847	64	453	340
TLQ.43..-770	770	770	456	197	62	188	314	314	155	82	4	456	3052	2224	1034	64	446	334
TLQ.43..-850	850	850	504	197	110	236	346	346	155	114	36	504	3305	2408	958	64	561	421
TLQ.43..-930	930	930	552	197	158	284	378	378	155	146	68	552	3509	2489	892	64	676	507
TLQ.43..-1010	1010	1010	600	197	206	332	410	410	155	178	100	600	3676	2328	834	64	792	518
TLQ.43..-1090	1090	1090	648	197	254	380	442	442	155	210	132	648	3816	2187	784	64	907	518
TLQ.43..-1170	1170	1170	696	197	302	428	474	474	155	242	164	696	3935	2063	739	64	1022	518
TLQ.43..-1250	1250	1250	744	197	350	476	506	506	155	274	196	744	4037	1951	699	64	1137	518
TLQ.43..-1330	1330	1330	792	197	398	524	538	538	155	306	228	792	4126	1851	663	64	1252	518
TLQ.43..-1410	1410	1410	840	197	446	572	570	570	155	338	260	840	4204	1761	631	64	1368	518
TLQ.43..-1490	1490	1490	888	197	494	620	602	602	155	370	292	888	4272	1679	602	64	1446	518
TLQ.43..-1570	1570	1570	936	197	542	668	634	634	155	402	324	936	4334	1605	575	64	1446	518
TLQ.43..-1650	1650	1650	984	197	590	716	666	666	155	434	356	984	4389	1536	551	64	1446	518
TLQ.43..-1730	1730	1730	1032	197	638	764	698	698	155	466	388	1032	4438	1474	528	64	1446	518
TLQ.43..-1810	1810	1810	1080	197	686	812	730	730	155	498	420	1080	4483	1416	507	64	1446	518
TLQ.43..-1890	1890	1890	1128	197	734	860	762	762	155	530	452	1128	4524	1363	488	64	1446	518
TLQ.43..-1970	1970	1970	1176	197	782	908	794	794	155	562	484	1176	4561	1313	470	64	1446	518

Ball-cage telescopic slides

TELERACE
TELESCOPIC SLIDES RANGE

The Ball-cage slides offer the most evoluted ball-cage slides on the market. Superior smooth performance, thanks to its nitriding hardened raceways, assuring constant preload during full lifetime and a high corrosion resistance - Unlike traditional zink plated slides, which soon loose their preload, once soft zink is consumed at ball contact points.

Ball-cage slides range

The series are composed of Semi-telescopic slides SR, for partial extention. For full extention TLS and TSQ slides, using the same base SR-component.

All versions available in size 28 and 43, and too with single or double stroke.

The TLS are full telescopics slides, composed of 2 semi-telescopic slides fixed to a robust S-shaped intermediate element, to prove high load capacities with min. flexion.
Double full stroke versions are too available.
The optimized design and hardened raceways provide superior performance at competitive prices compared to traditional zinc plated slides.

TLS

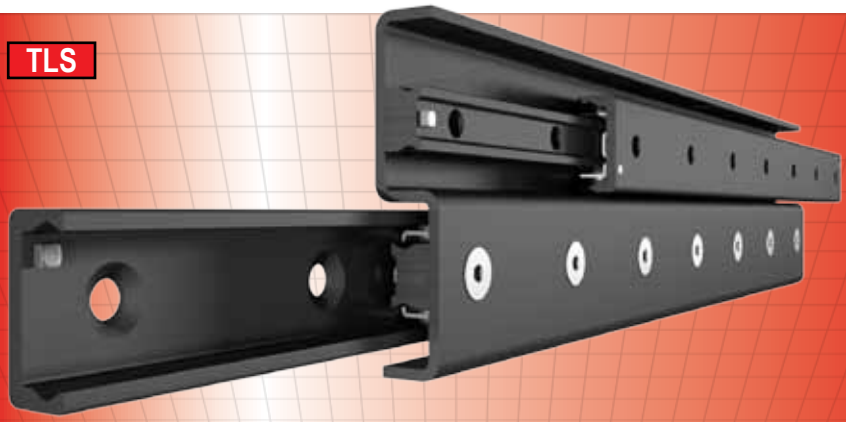

The SR semi-telescopic slides, allows for half stroke on each side. The SR slides are the base component for TLS and TSQ slides.
Unique solution for partial extensions of heavy loads, at econimical prices.
With double stroke, space saving linear solutions can be obtained.

SR

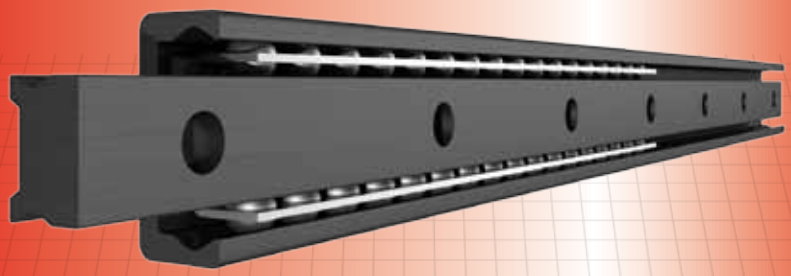

TSQ sildes are obtained by rivetting 2 semi-telescopic SR slides together, forming a H-shaped intermediate element, in whcih the inner rails are fixed to mobil and fixed structure.
The TSQ slides offer very compact dimensions, with good radial and axial load capacities.
Full double stroke is possible for all versions.

TSQ

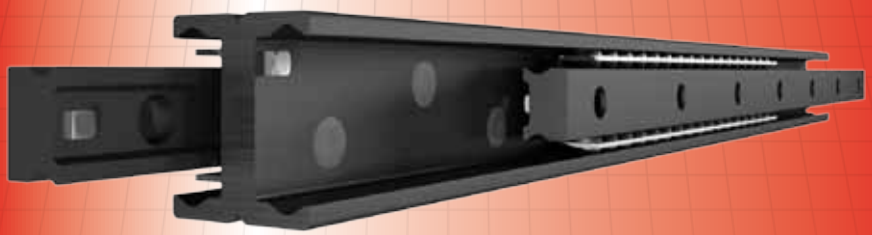

Ball-cage telescopic slides

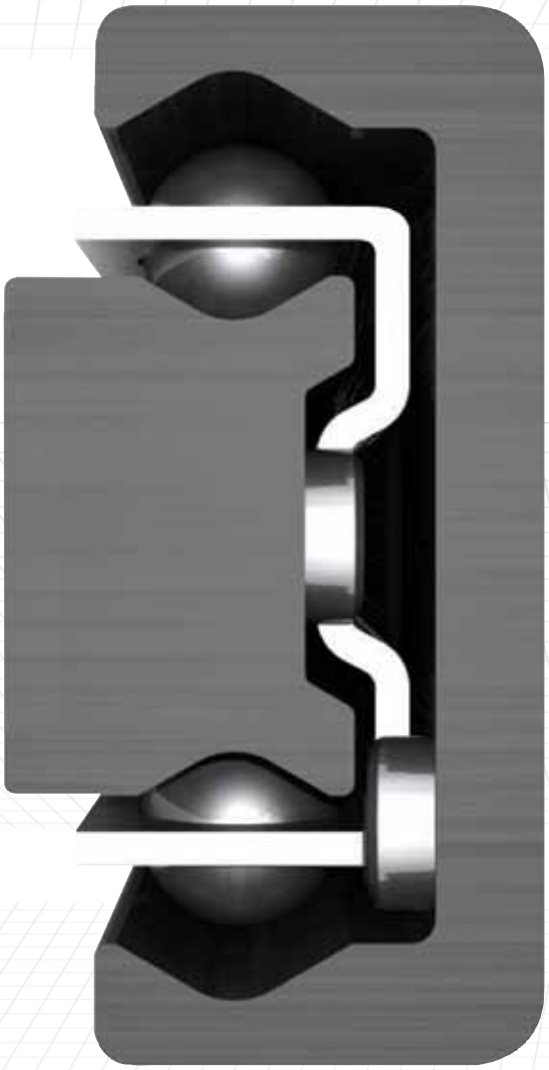

1 Improved lifetime
- Constant smooth movement
- Complete overall nitrtiding hardened profiles with high resistance to wear
- Constant preload, unlike zink plated slides
- Smooth black finish

2 Improved load capacity
- Large ball diameter
- Increased number of balls per ball-cage
- Nitriding hardened raceways for increased load capacity

3 Improved resistance to impacts
- Shaped ball-cage to offer more rigid ball-cage
- Improved stoppers
- Reduced ball-cage creeping problems

4 Improved corrosion resistance
- T NOX treatment to provide high standard corrosion resistance, much superior to traditional zink plated slides
- Version with INOX components available

BALL-CAGE LINEAR RANGE

Ball-cage linear bearings

SF

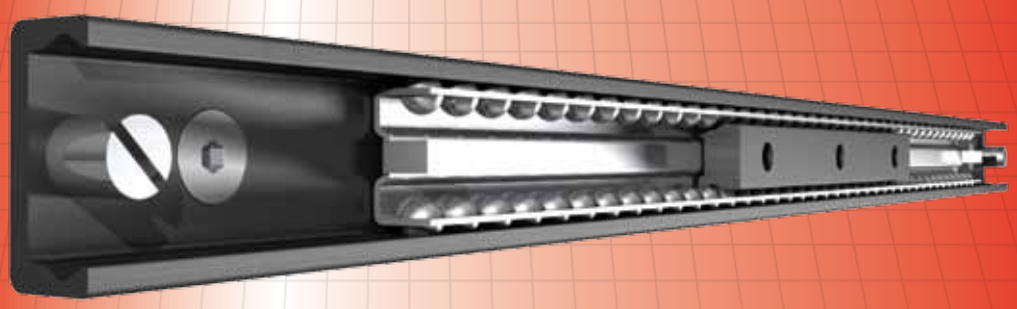

The SF ball-cage linear bearings offer simple, but very strong linear solutions for heavy duty applications and high loads.
Product offered in many versions and too easily customized, with more slides in same rail. Same components as SR, but inner slider/s moving inside the rail.

Ball-cage telescopic slides TLS28, TLSX28

TELERACE
TELESCOPIC SLIDES RANGE

TLS.28 WITH SINGLE STROKE

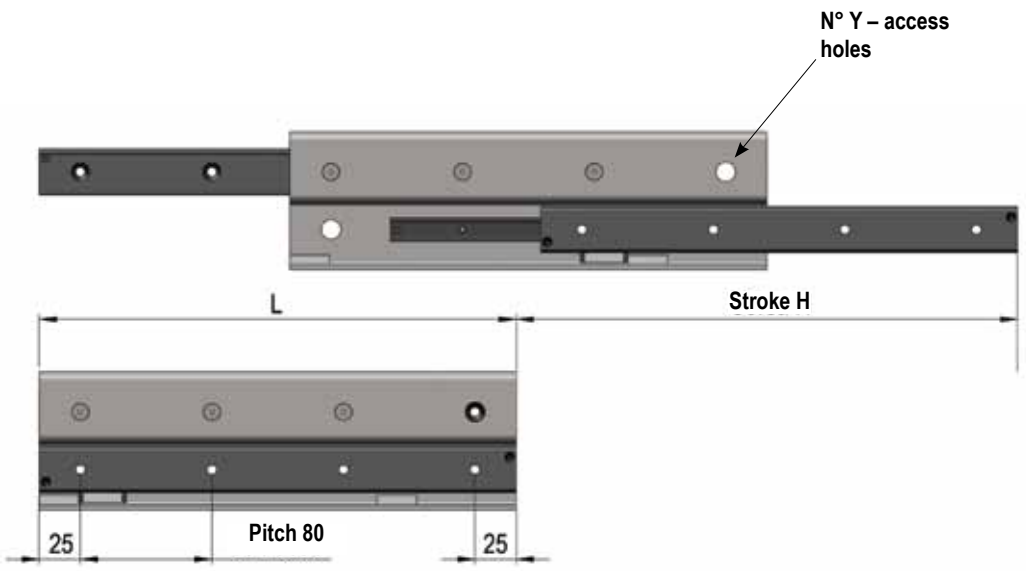

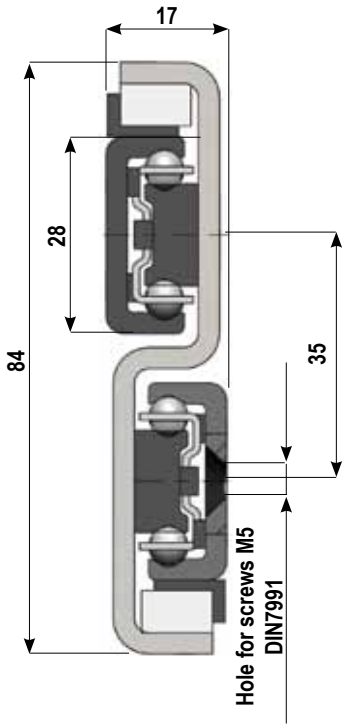

** In closed position most fixing holes are accessible throng the access-holes Y on the intermediate element.*

Code	Lenght L (mm)	Stroke H (mm)	n°Y access holes	Coeff. dynamic C (N)	Load capacity Co rad (N)	Weight (kg)
TLS.28-290	290	295	1	867	577	1,8
TLS.28-370	370	380	1	1143	761	2,3
TLS.28-450	450	460	1	1525	1020	2,8
TLS.28-530	530	540	2	1802	1205	3,3
TLS.28-610	610	620	2	2187	1465	3,8
TLS.28-690	690	700	2	2464	1651	4,3
TLS.28-770	770	780	2	2850	1913	4,8
TLS.28-850	850	860	3	3127	2098	5,3
TLS.28-930	930	940	3	3514	2222	5,8
TLS.28-1010	1010	1020	3	3791	2053	6,3
TLS.28-1090	1090	1100	3	4068	1907	6,8
TLS.28-1170	1170	1180	4	4455	1781	7,3
TLS.28-1250	1250	1260	4	4732	1671	7,8
TLS.28-1330	1330	1340	4	5120	1573	8,2
TLS.28-1410	1410	1420	4	5397	1486	8,7
TLS.28-1490	1490	1500	5	5785	1409	9,2

The slide TLSX28 offers high corrosion resistance, with all components and intermediate element in INOX, except the rails. The TLSX28 have same dimensions and performance as standard version TLS28 .

Order code ex. :
TLS28-610 standard slide with single stroke.
TLSX28D-610 slide with double stroke and high corrosion resistance.

The nominal load capacities Co rad are all based for load related to centered load position P, in the middle of the slide. For applications with load in other positions, please refer to page 26.

Load capacities are indicated per single slide.

The TLS slide is installed with upper rail fixed to structure and lower rail fixed to mobile part, - having the product code at top.
For flexion f in relation to applied load and its position, please refer to page 28 .

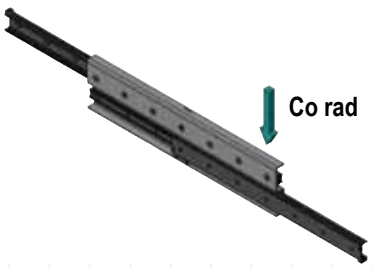

TLS.28D WITH DOUBLE STROKE

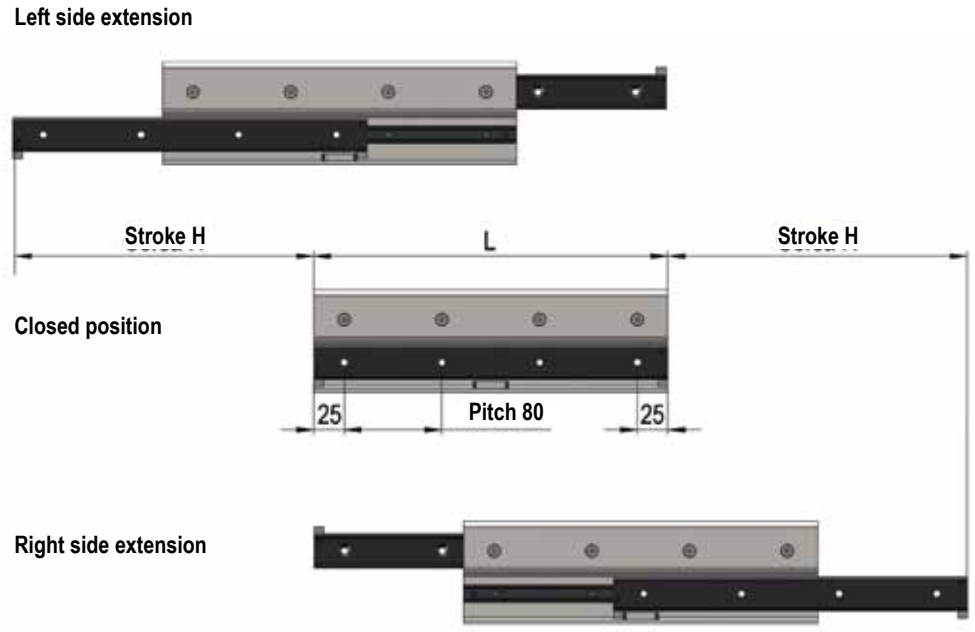

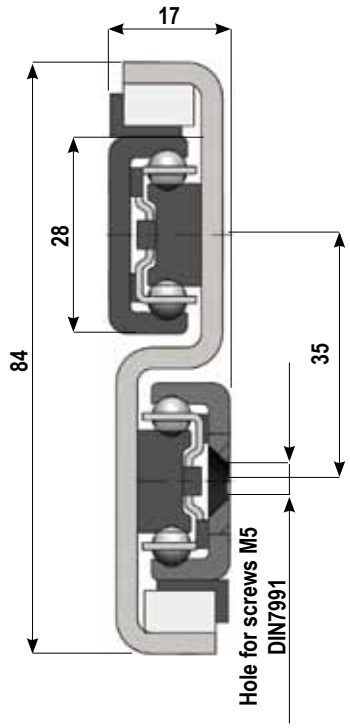

** The rail' central fixing hole, with odd fixing holes are not accessible, and therefore not to be used for fixing.*
NB. In closed position the intermediate element might be protruding at one of the sides, as movement not synchronized with the rails.

Code	Lenght L (mm)	Stroke H (mm)	Coeff. dynamic C (N)	Load capacity Co rad (N)	Weight (kg)
TLS.28D-290	290	245	1481	1020	1,8
TLS.28D-370	370	325	1866	1280	2,3
TLS.28D-450	450	405	2129	1454	2,8
TLS.28D-530	530	485	2518	1718	3,3
TLS.28D-610	610	565	2787	1897	3,8
TLS.28D-690	690	645	3057	2077	4,3
TLS.28D-770	770	725	3448	2342	4,8
TLS.28D-850	850	805	3720	2523	5,3
TLS.28D-930	930	885	4110	2566	5,8
TLS.28D-1010	1010	965	4383	2343	6,3
TLS.28D-1090	1090	1045	4774	2155	6,8
TLS.28D-1170	1170	1125	5047	1996	7,3
TLS.28D-1250	1250	1205	5438	1858	7,8
TLS.28D-1330	1330	1285	5712	1738	8,2
TLS.28D-1410	1410	1365	5986	1633	8,7
TLS.28D-1490	1490	1445	6376	1539	9,2

The slide TLSX28 offers high corrosion resistance, with all components and intermediate element in INOX, except the rails. The TLSX28 have same dimensions and performance as standard version TLS28 .

Order code ex. :
TLS28-610 standard slide with single stroke.
TLSX28D-610 slide with double stroke and high corrosion resistance.

The nominal load capacities Co rad are all based for load related to centered load position P, in the middle of the slide. For applications with load in other positions, please refer to page 26.

Load capacities are indicated per single slide.

The TLS slide is installed with upper rail fixed to structure and lower rail fixed to mobile part, - having the product code at top.
For flexion f in relation to applied load and its position, please refer to page 28.

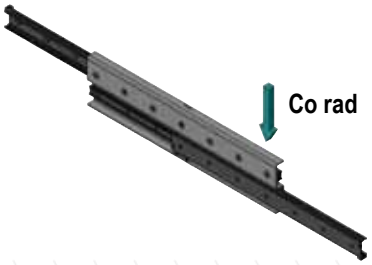

Ball-cage telescopic slides TLS43, TLSX43

TELERACE
TELESCOPIC SLIDES RANGE

TLS.43 WITH SINGLE STROKE

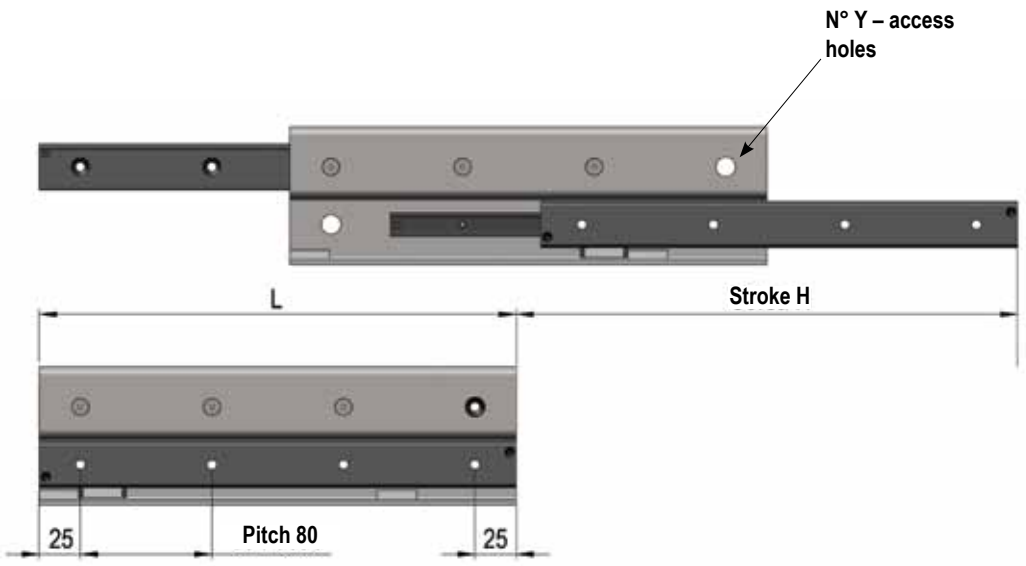

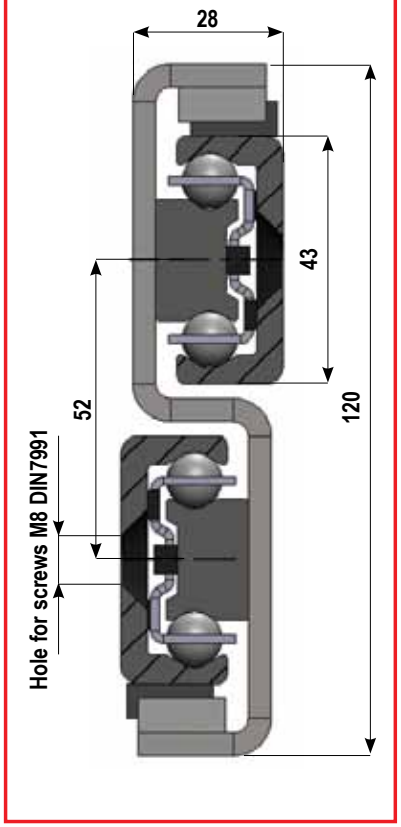

** In closed position most fixing holes are accessible throng the access-holes Y on the intermediate element*

Code	Lenght L (mm)	Stroke H (mm)	n°Y access holes	Coeff. dynamic C (N)	Load capacity Co rad (N)	Weight (kg)
TLS.43-530	530	545	2	3489	2186	7,6
TLS.43-610	610	625	2	3824	2393	8,7
TLS.43-690	690	705	2	4467	2799	9,9
TLS.43-770	770	785	2	5112	3206	11
TLS.43-850	850	865	3	5757	3614	12,2
TLS.43-930	930	945	3	6404	4022	13,3
TLS.43-1010	1010	1025	3	7050	4431	14,5
TLS.43-1090	1090	1105	3	7698	4840	15,6
TLS.43-1170	1170	1185	4	8027	4715	16,8
TLS.43-1250	1250	1265	4	8674	4427	17,9
TLS.43-1330	1330	1345	4	9321	4172	19,1
TLS.43-1410	1410	1425	4	9969	3945	20,2
TLS.43-1490	1490	1505	5	10616	3741	21,4
TLS.43-1570	1570	1585	5	11264	3558	22,5
TLS.43-1650	1650	1665	5	11912	3391	23,7
TLS.43-1730	1730	1745	5	12240	3240	24,8
TLS.43-1810	1810	1825	6	12887	3101	26
TLS.43-1890	1890	1905	6	13535	2974	27,1
TLS.43-1970	1970	1985	6	14183	2857	28,3

The slide TLSX43 offers high corrosion resistance, with all components and intermediate element in INOX, except the rails. The TLSX43 have same dimensions and performance as standard version TLS43.

Order code ex. :
TLS43-610 standard slide with single stroke.
TLSX43D-610 slide with double stroke and high corrosion resistance.

The nominal load capacities Co rad are all based for load related to centered load position P, in the middle of the slide. For applications with load in other positions, please refer to page 26.

Load capacities are indicated per single slide.

The TLS slide is installed with upper rail fixed to structure and lower rail fixed to mobile part, - having the product code at top.
For flexion f in relation to applied load and its position, please refer to page 28.

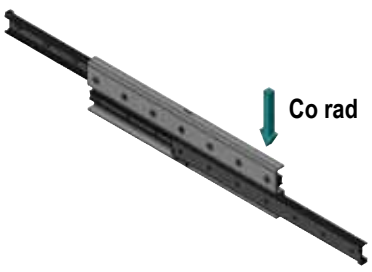

TLS.43D WITH DOUBLE STROKE

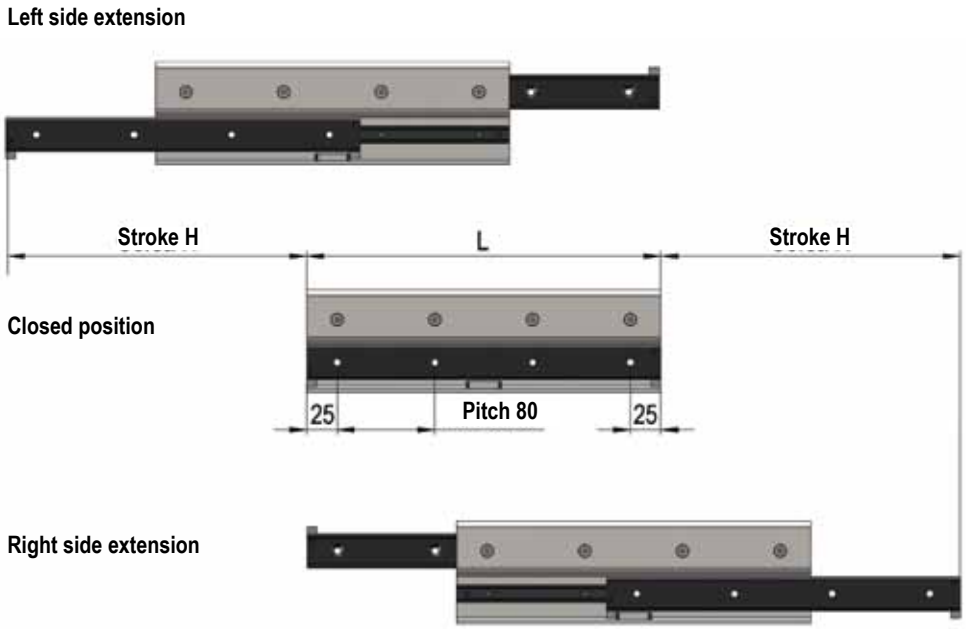

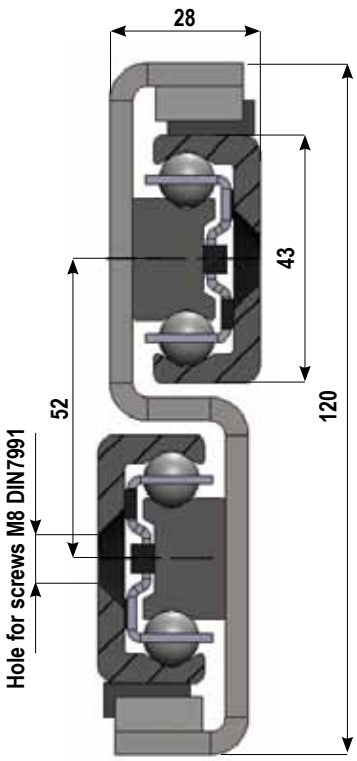

The rail' central fixing hole, with odd fixing holes are not accessible, and therefore not to be used for fixing.
NB. In closed position the intermediate element might be protruding at one of the sides, as movement not synchronized with the rails.

Code	Lenght L (mm)	Stroke H (mm)	Coeff. dynamic C (N)	Load capacity Co rad (N)	Weight (kg)
TLS.43D-530	530	480	4726	3022	7,6
TLS.43D-610	610	560	5020	3197	8,7
TLS.43D-690	690	640	5667	3605	9,9
TLS.43D-770	770	720	6314	4015	11
TLS.43D-850	850	800	6962	4424	12,2
TLS.43D-930	930	880	7610	4834	13,3
TLS.43D-1010	1010	960	8258	5244	14,5
TLS.43D-1090	1090	1040	8907	5654	15,6
TLS.43D-1170	1170	1120	9217	5272	16,8
TLS.43D-1250	1250	1200	9867	4915	17,9
TLS.43D-1330	1330	1280	10516	4603	19,1
TLS.43D-1410	1410	1360	11165	4328	20,2
TLS.43D-1490	1490	1440	11814	4084	21,4
TLS.43D-1570	1570	1520	12464	3866	22,5
TLS.43D-1650	1650	1600	13113	3670	23,7
TLS.43D-1730	1730	1680	13428	3493	24,8
TLS.43D-1810	1810	1760	14078	3333	26
TLS.43D-1890	1890	1840	14727	3186	27,1
TLS.43D-1970	1970	1920	15377	3052	28,3

The slide TLSX43 offers high corrosion resistance, with all components and intermediate element in INOX, except the rails. The TLSX43 have same dimensions and performance as standard version TLS43.

Order code ex. :
TLS43-610 standard slide with single stroke.
TLSX43D-610 slide with double stroke and high corrosion resistance.

The nominal load capacities Co rad are all based for load related to centered load position P, in the middle of the slide. For applications with load in other positions, please refer to page 26.

Load capacities are indicated per single slide.
The TLS slide is installed with upper rail fixed to structure and lower rail fixed to mobile part, - having the product code at top.
For flexion f in relation to applied load and its position, please refer to page 28 .

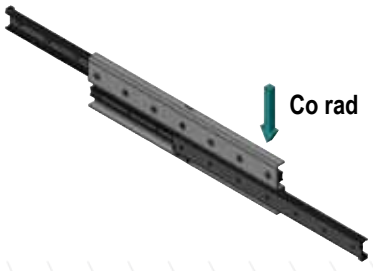

Ball-cage telescopic slides TSQ28, TSQX28

TELERACE
TELESCOPIC SLIDES RANGE

TSQ.28 – STANDARD: Threaded holes both sides.

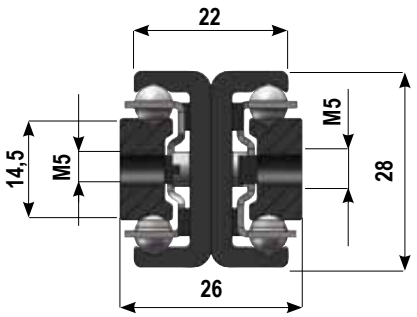

TSQ.28S : C'sunk fixing holes both sides.

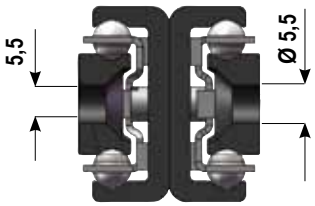

TSQ.28M : C'sunk fixing holes and other side with threaded fixing holes.

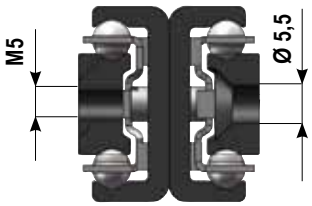

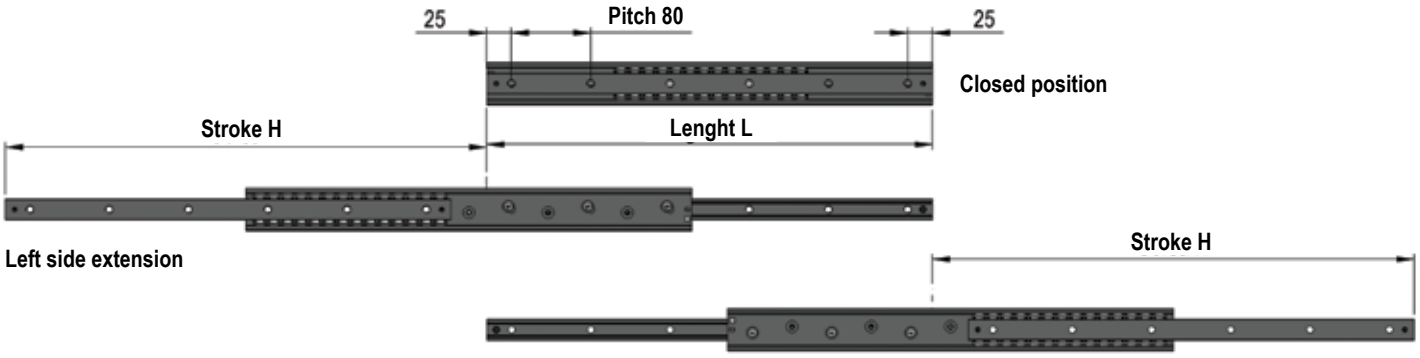

Code	Lenght L (mm)	Stroke H (mm)	Coeff. dynamic C (N)	Load capacity Co rad (N)	Load capacity Co ax (N)	Weight (kg)
TSQ.28.-130	130	136	392	259	151	0,4
TSQ.28.-210	210	224	685	454	265	0,7
TSQ.28.-290	290	312	979	649	379	1,1
TSQ.28.-370	370	400	1273	844	358	1,4
TSQ.28.-450	450	470	1759	1173	316	1,7
TSQ.28.-530	530	558	2051	1037	266	2
TSQ.28.-610	610	628	2547	944	242	2,3
TSQ.28.-690	690	716	2839	825	211	2,6
TSQ.28.-770	770	786	3340	765	196	2,9
TSQ.28.-850	850	874	3630	685	175	3,2
TSQ.28.-930	930	944	4134	643	165	3,5
TSQ.28.-1010	1010	1032	4422	585	150	3,8
TSQ.28.-1090	1090	1120	4712	537	138	4,1
TSQ.28.-1170	1170	1190	5217	511	131	4,4

The slide TSQX28 offers high corrosion resistance, with all components in INOX, except the rails. The TSQX28 have same dimensions and performance as standard version TSQ28 .
Order code ex. :
TSQ28-610 standard slide with single stroke, fixing holes all threaded.
TSQX28S-610 slide with single stroke and high corrosion resistance.

NB. All versions can perform double stroke of equal stroke, just by removing the two small screws at both ends. No separate coding for double stroke versions
The nominal load capacities in table, are all related to centered load position P, in the middle of the slide. For applications with load in other positions, please refer to page 26.
Load capacities are indicated per single slide.
For flexion f in relation to applied load and its position, please refer to page 28.

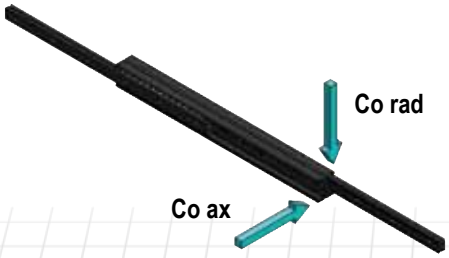

TSQ.43 – STANDARD: Threaded holes both sides.

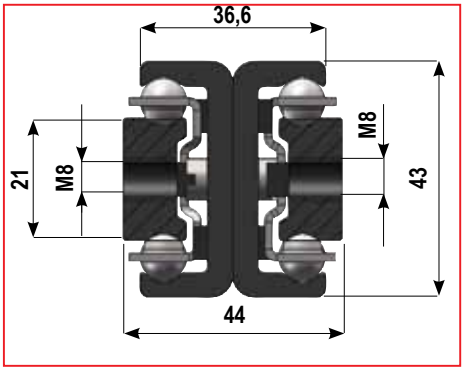

TSQ.43S : C'sunk fixing holes both sides.

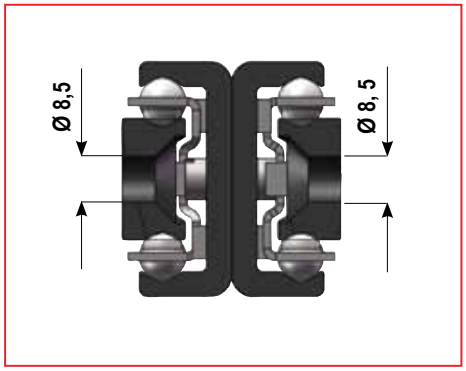

TSQ.43M : C'sunk fixing holes and other side with threaded fixing holes.

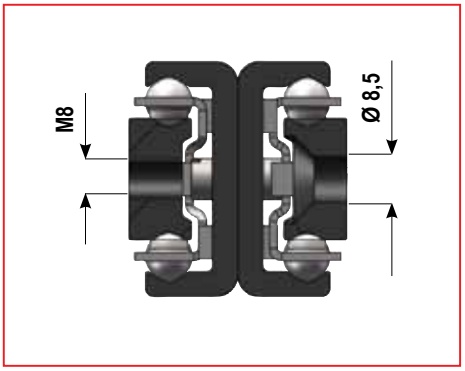

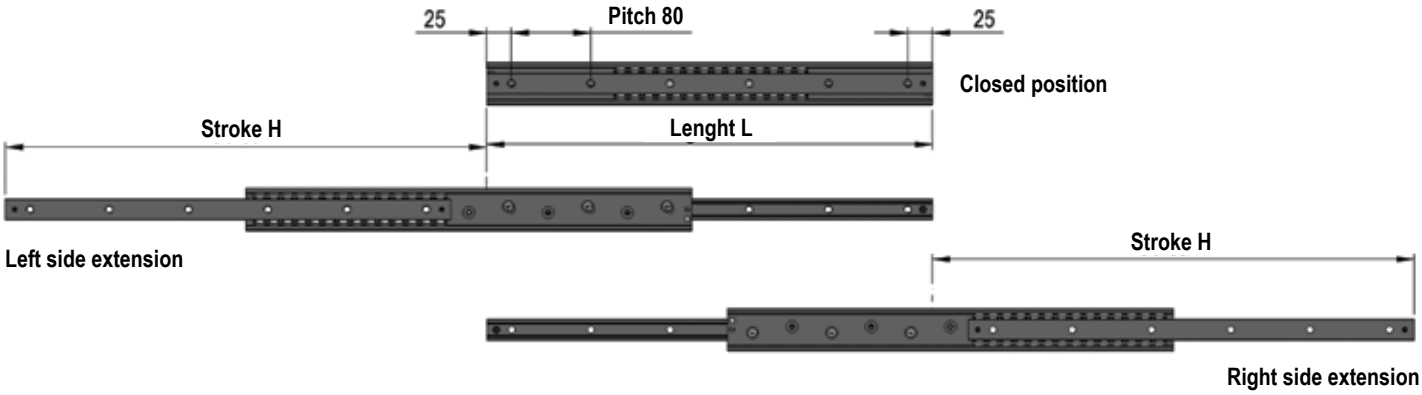

Code	Lenght L (mm)	Stroke H (mm)	Coeff. dynamic C (N)	Load capacity Co rad (N)	Load capacity Co ax (N)	Weight (kg)
TSQ.43.-210	210	236	968	636	410	1,9
TSQ.43.-290	290	312	1657	1098	709	2,7
TSQ.43.-370	370	416	1891	1246	804	3,4
TSQ.43.-450	450	492	2583	1710	1104	4,2
TSQ.43.-530	530	568	3289	2187	1105	4,9
TSQ.43.-610	610	644	4005	2670	992	5,7
TSQ.43.-690	690	720	4727	3158	901	6,4
TSQ.43.-770	770	824	4924	2733	774	7,2
TSQ.43.-850	850	900	5642	2532	717	7,9
TSQ.43.-930	930	976	6363	2359	668	8,7
TSQ.43.-1010	1010	1052	7088	2208	625	9,4
TSQ.43.-1090	1090	1128	7816	2075	587	10,2
TSQ.43.-1170	1170	1204	8545	1957	554	10,9
TSQ.43.-1250	1250	1280	9277	1852	524	11,7
TSQ.43.-1330	1330	1384	9450	1690	478	12,4
TSQ.43.-1410	1410	1460	10178	1611	456	13,2
TSQ.43.-1490	1490	1536	10908	1539	436	13,9
TSQ.43.-1570	1570	1612	11639	1473	417	14,7
TSQ.43.-1650	1650	1688	12371	1413	400	15,4
TSQ.43.-1730	1730	1764	13104	1357	384	16,2
TSQ.43.-1810	1810	1840	13838	1306	370	16,9
TSQ.43.-1890	1890	1944	14001	1223	346	17,7
TSQ.43.-1970	1970	2020	14733	1181	334	18,4

The slide TSQX43 offers high corrosion resistance, with all components in INOX, except the rails. The TSQX43have same dimensions and performance as standard version TSQ43 .
Order code ex. :
TSQ43-610 standard slide with single stroke, fixing holes all threaded.
TSQX43S-610 slide with single stroke and high corrosion resistance.

NB. All versions can perform double stroke of equal stroke, just by removing the two small screws at both ends. No separate coding for double stroke versions
The nominal load capacities in table, are all related to centered load position P, in the middle of the slide. For applications with load in other positions, please refer to page 26.
Load capacities are indicated per single slide.
For flexion f in relation to applied load and its position, please refer to page 28.

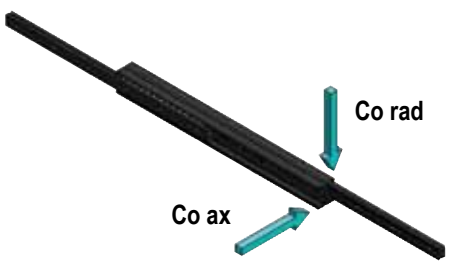

Semi-telescopic slides SR28, SRX28

TELERACE
TELESCOPIC SLIDES RANGE

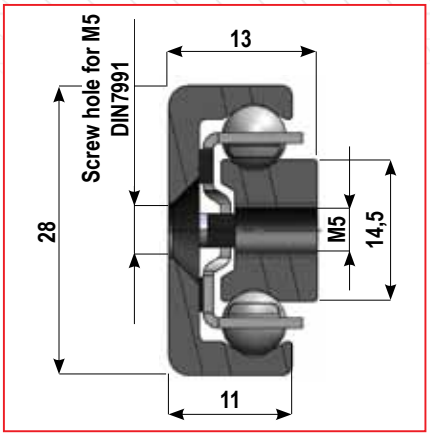

The semi-telescopic slides SR28 allow for a stroke H, equal to the half the length of the slide, plus a minor stroke 10-25mm depending on type.
The slides can to perform an equal stroke to the other side, removing the small screw positioned at the left side.

The version SRX28 for high corrosion resistance, have all components in INOX, except the profiles. SXR28 have same dimensions and performance as SR28.

The load capacities are all referred to a single slide, with load at the centered position.

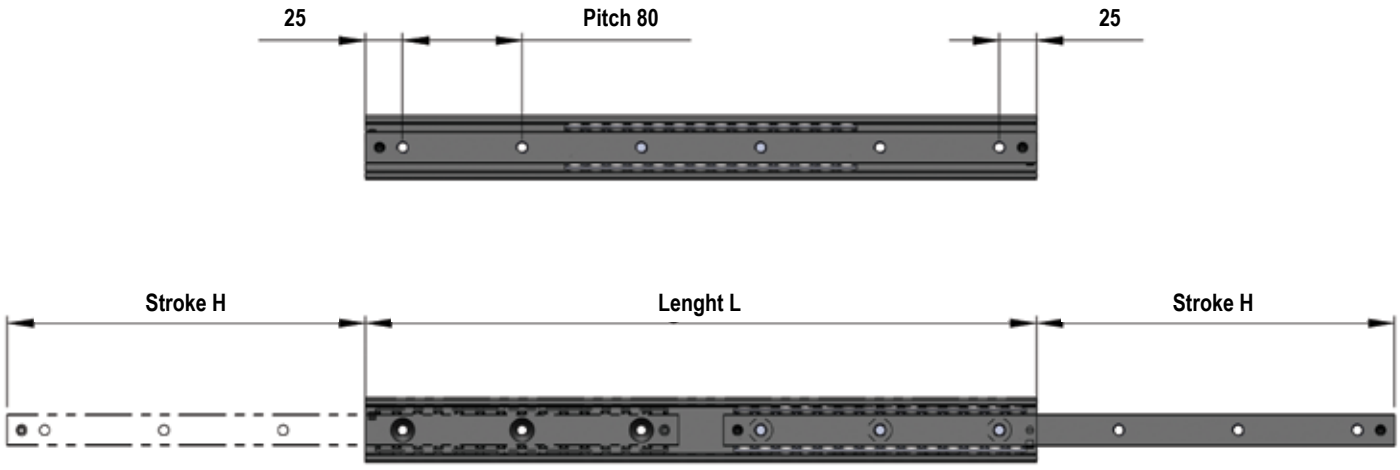

Code	Lenght L (mm)	Stroke H (mm)	Coeff.dyn. C (N)	Load-moment capacities					Weight (kg)
				Co rad (Nm)	Co ax (Nm)	Mx (Nm)	My (Nm)	Mz (Nm)	
SR.28-130	130	68	872	639	374	13	15	27	0,25
SR.28-210	210	112	1544	1139	665	23	46	80	0,4
SR.28-290	290	156	2217	1639	958	33	94	161	0,55
SR.28-370	370	200	2891	2140	1251	43	158	270	0,7
SR.28-450	450	235	3934	2949	1724	55	260	446	0,86
SR.28-530	530	279	4607	3450	2017	65	361	618	1,01
SR.28-610	610	314	5666	4276	2499	78	510	873	1,16
SR.28-690	690	358	6337	4774	2791	88	648	1109	1,31
SR.28-770	770	393	7403	5608	3278	100	843	1443	1,46
SR.28-850	850	437	8072	6105	3569	110	1018	1742	1,62
SR.28-930	930	472	9142	6943	4059	122	1259	2154	1,77
SR.28-1010	1010	516	9810	7438	4348	132	1471	2516	1,92
SR.28-1090	1090	560	10480	7934	4638	142	1699	2906	2,07
SR.28-1170	1170	595	11550	8774	5129	155	2007	3433	2,22

The nominel load capacities and moment capacities, above listed, are only valid for central positioned loads/moments = the central point of mobile part when fully extended.
Customized versions with longer or shorter stroke can easily be obtained.
With 75% extenstion compared to standard 50% the load capacity is ca. 20% of above figures, Ex. SR28-1010 with 760mm stroke one or boths side offer a load capacity of N1468 .

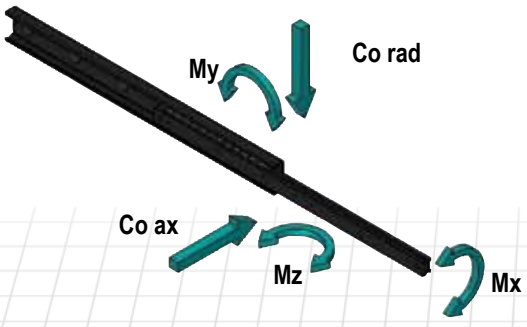

Semi-telescopic slides SR43, SRX43

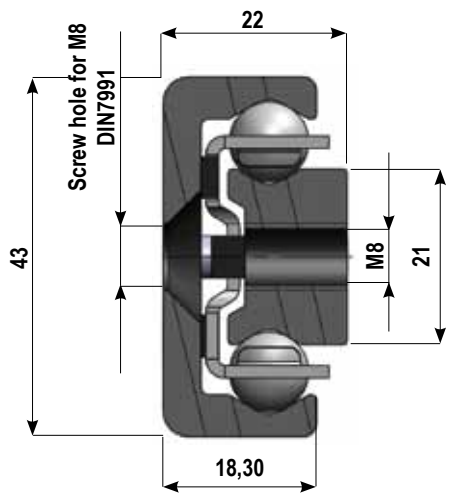

The semi-telescopic slides SR43 allow for a stroke H, equal to the half the length of the slide, plus a minor stroke 10-25mm depending on type.
The slides can to perform an equal stroke to the other side, removing the small screw positioned at the left side.

The version SRX43 for high corrosion resistance, have all components in INOX, except the profiles. SXR43 have same dimensions and performance as SR43.

The load capacities are all referred to a single slide, with load at the centered position.

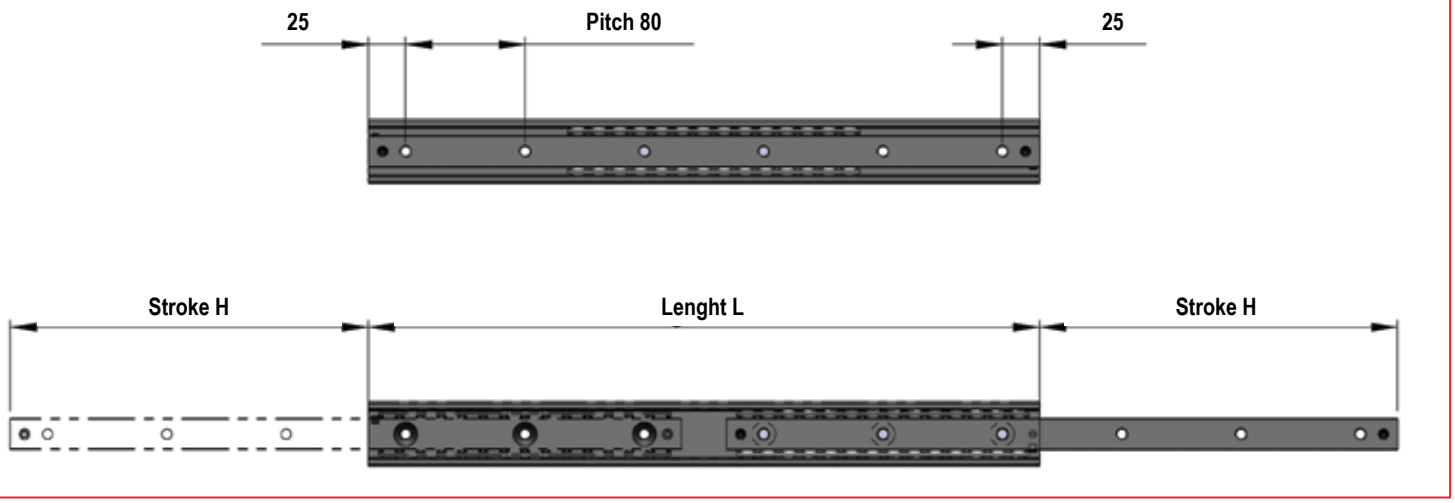

Code	Lenght L (mm)	Stroke H (mm)	Coeff.dyn. C (N)	Load-moment capacities					Weight (kg)
				Co rad (Nm)	Co ax (Nm)	Mx (Nm)	My (Nm)	Mz (Nm)	
SR.43-210	210	116	2232	1497	966	99	75	117	1,0
SR.43-290	290	154	3817	2615	1688	152	176	272	1,4
SR.43-370	370	206	4496	3055	1972	187	266	412	1,7
SR.43-450	450	244	6107	4197	2709	239	436	675	2,1
SR.43-530	530	282	7746	5368	3464	292	647	1003	2,5
SR.43-610	610	320	9403	6556	4232	344	901	1396	2,9
SR.43-690	690	358	11072	7757	5006	397	1196	1853	3,2
SR.43-770	770	410	11693	8138	5253	432	1416	2194	3,6
SR.43-850	850	448	13358	9334	6025	484	1781	2759	4,0
SR.43-930	930	486	15030	10538	6802	537	2187	3389	4,4
SR.43-1010	1010	524	16707	11747	7582	589	2636	4084	4,7
SR.43-1090	1090	562	18390	12962	8366	642	3126	4843	5,1
SR.43-1170	1170	600	20076	14180	9152	694	3658	5667	5,5
SR.43-1250	1250	638	21764	15401	9941	747	4231	6556	5,9
SR.43-1330	1330	690	22347	15743	10161	782	4637	7184	6,3
SR.43-1410	1410	728	24032	16960	10947	834	5280	8180	6,6
SR.43-1490	1490	766	25719	18180	11734	887	5965	9241	7,0
SR.43-1570	1570	804	27409	19402	12523	939	6691	10367	7,4
SR.43-1650	1650	842	29100	20626	13313	992	7460	11557	7,8
SR.43-1730	1730	880	30793	21852	14105	1044	8270	12813	8,1
SR.43-1810	1810	918	32488	23080	14897	1097	9122	14132	8,5
SR.43-1890	1890	970	33053	23403	15106	1132	9713	15048	8,9
SR.43-1970	1970	1008	34745	24628	15896	1184	10634	16476	9,3

Steel/INOX roller slides
TLAZ, TLAX, TQAZ,TQAX

TELESCOPIC SLIDES RANGE

The TLAZ e TQAZ slides are made from robust rolled steel profiles and precision bearings, for smooth and precise moment along with interesting load capacities. The TLAZ comes with an intermediate element to offer higher load capacities than the TQAZ for the medium/longer stroke versions. These slides represent T RACE's most economical telescopic slides, but nothing compared with cheap furniture drawer-slides, based on ball-cage movement. The slides are for application where TLS/TSQ/TLR/TQL28 can't meet the target price or where commercial drawer slides can't meet the requested quality and smooth movement.
The slides are available in standard steel version and complete INOX versions: TLAX, TQAX. The INOX versions offer same performance as standard and with same dimensions.

TLAZ, TQAZ, slides

The slides offer a stroke qual to the length of the slide. The roller bearings are with 2Z seals and lubed for life. Thanks to high temperature grease, the TLAZ and TQAZ are too suitable for application with constant temperature of 170° celcius

The slides comes all with strong damping rubber end-stops , which together with the rolling movement assure very silent function.

TLAX, TQAX, - inox slides

Same dimensions and performance as standard version. All components is INOX. The roller bearings have 2RS seal and lubed for life with grease for alimentary and low temperature applications. Ideal slides for use in medial, chemical, alimentary industries, or in high corrosive ambients as marine equipment. Too for clean room usage, as very low emission of particles.

The slides can easily be washed, due to its open construction.

The TLAZ, TLAX slides have vertical intermediate element to provide good load capacities. Designed for installation at the sides of mobile part for horizontal extension.

The TQAZ, TQAX slides have a very compact and squared design, obtained by welding the two rails together, in which are running a pair of 3-roller sliders on each side. Fixed structure and mobile part are fixed to the sliders.
The slide offer a stroke equal to its length. Suitable also form vertical applications.
Due to its independent sliders, the TQAZ slide allows to optimize the stroke for each version. Just by positioning the slides more close together, for longer stroke, but reducing load capacity, or further apart for shorter stroke and higher load capacity.
Similar to TLQ page 5, kindly check for further info.

TLAZ, TLAX

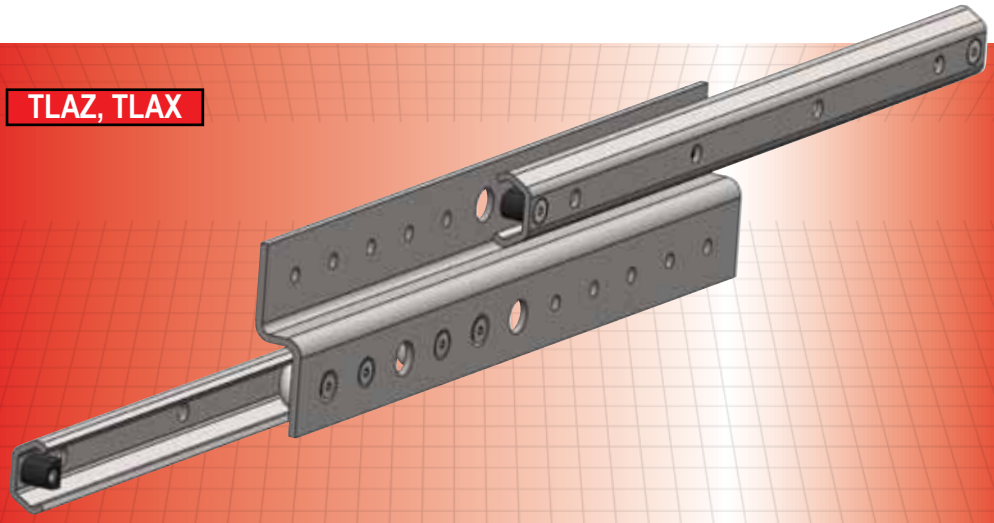

TQAZ, TQAX

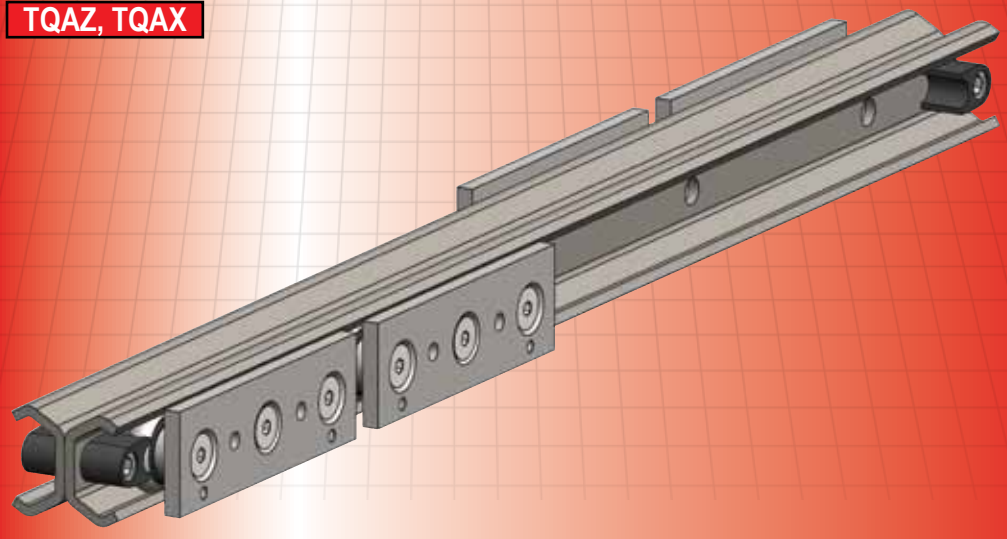

The TLAX and TQAX are complete INOX slides, same dimensions and performances as standard steel version TLAZ and TQAZ. Load capacities are indicated for single slide, central positioned.

Roller steel/INOX slides TLAZ, TLAX

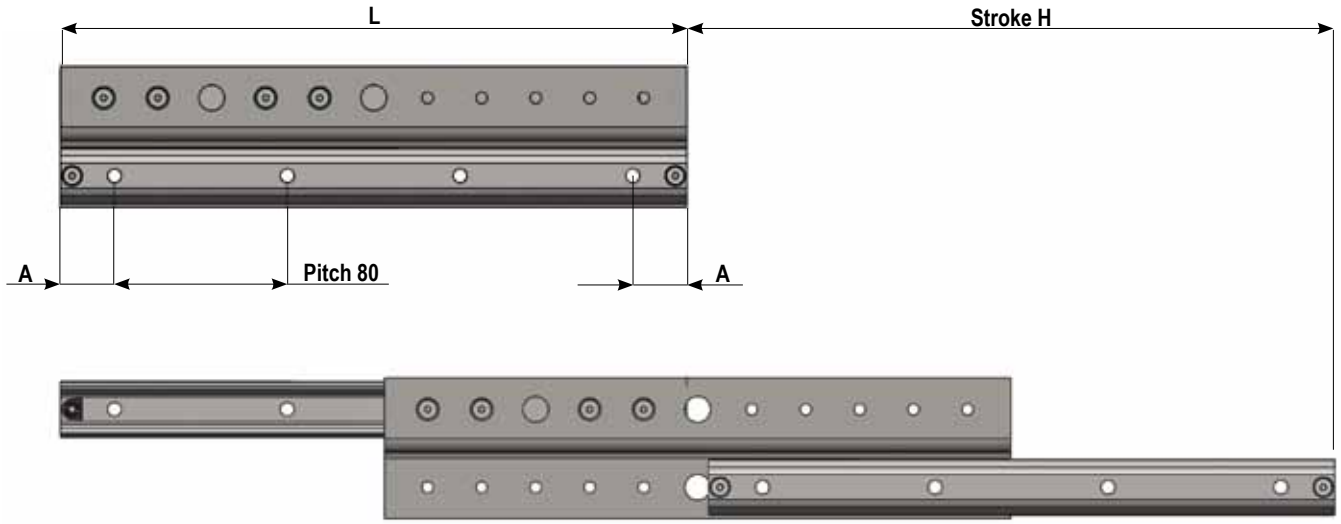

TLAZ26, TLAX26

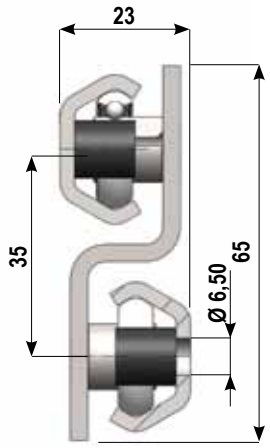

Weight:

Code	Lenght. L (mm)	Stroke H (mm)	A (mm)	N° holes fixing	Load capacity Co rad (N)
TLA.26-300	300	300	30	4	320
TLA.26-350	350	350	55	4	400
TLA.26-400	400	400	40	5	457
TLA.26-450	450	450	25	6	500
TLA.26-500	500	350	50	6	533
TLA.26-550	550	550	35	7	560
TLA.26-600	600	600	20	8	581
TLA.26-650	650	350	45	8	541
TLA.26-700	700	700	30	9	615
TLA.26-750	750	750	55	9	628
TLA.26-800	800	350	40	10	406
TLA.26-850	850	850	25	11	650
TLA.26-900	900	900	50	11	658
TLA.26-1000	1000	1000	20	13	664
TLA.26-1100	1100	1100	30	14	609
TLA.26-1200	1200	1200	40	15	562

TLAZ40, TLAX40 *

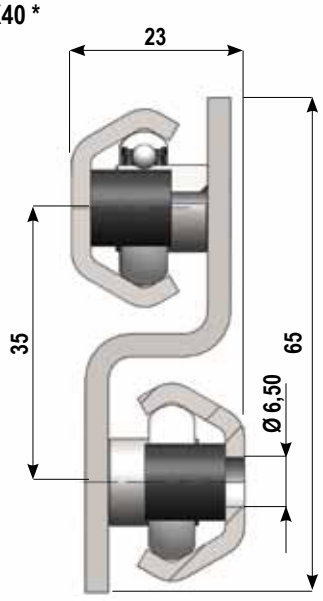

Weight:

Code	Lenght. L (mm)	Stroke H (mm)	A (mm)	N° holes fixing	Load capacity Co rad (N)
TLA.40-500	500	500	50	6	752
TLA.40-550	550	550	35	7	842
TLA.40-600	600	600	20	8	914
TLA.40-650	650	550	45	8	993
TLA.40-700	700	700	30	9	1024
TLA.40-750	750	550	55	9	1066
TLA.40-800	800	800	40	10	1103
TLA.40-850	850	550	25	11	905
TLA.40-900	900	900	50	11	1163
TLA.40-1000	1000	1000	20	13	1210
TLA.40-1100	1100	1100	30	14	1158
TLA.40-1200	1200	1200	40	15	1072
TLA.40-1300	1300	1300	50	16	998
TLA.40-1400	1400	1400	20	18	934
TLA.40-1500	1500	1500	30	19	877
TLA.40-1600	1600	1600	40	20	827

The TQAX are complete INOX slides, same dimensions and performances as standard steel version TQAZ . Load capacity indicated for single slide.

**** on demand***

Roller steel/INOX slides TQAZ, TQAX

TELERACE
TELESCOPIC SLIDES RANGE

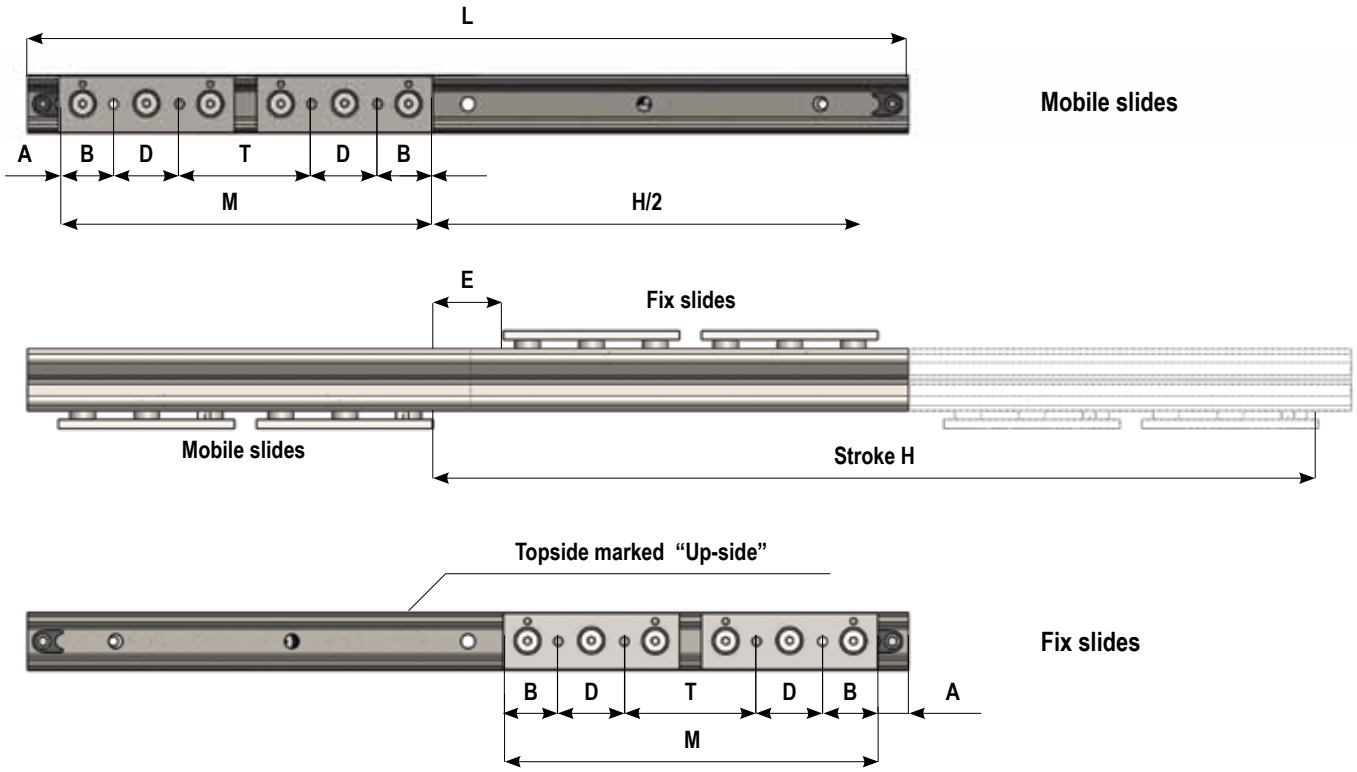

Fixing hole position of sliders				
Type	A	B	D	E
TQA.26	14	25	30	28
TQA.40	0	7,5	120	0

Code	Lenght. L (mm)	Stroke H (mm)	Distance sliders M (mm)	T (mm)	Load capacity Co rad (N)	Load capacity Co ax (N)
TQA.26-400	400	400	172	62	417	208
TQA.26-450	450	450	197	87	465	232
TQA.26-500	500	500	222	112	503	251
TQA.26-550	550	550	247	137	533	262
TQA.26-600	600	600	272	162	513	243
TQA.26-650	650	650	297	187	479	227
TQA.26-700	700	700	322	212	450	213
TQA.26-750	750	750	347	237	424	201
TQA.26-800	800	800	372	262	400	190
TQA.26-850	850	850	397	287	379	180
TQA.26-900	900	900	422	312	361	171
TQA.26-1000	1000	1000	472	362	328	156
TQA.26-1100	1100	1100	522	412	301	143
TQA.26-1200	1200	1200	572	462	278	132

TQAZ26, TQAX26

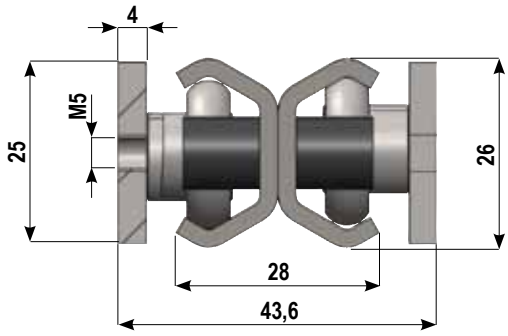

Weight of the 4 sliders: 0,4 kg
Weight of the rail: 1,5 kg/m

The TQAX are complete INOX slides, same dimensions and performances as standard steel version TQAZ . Load capacity indicated for single slide.

TQAZ40, TQAX40*

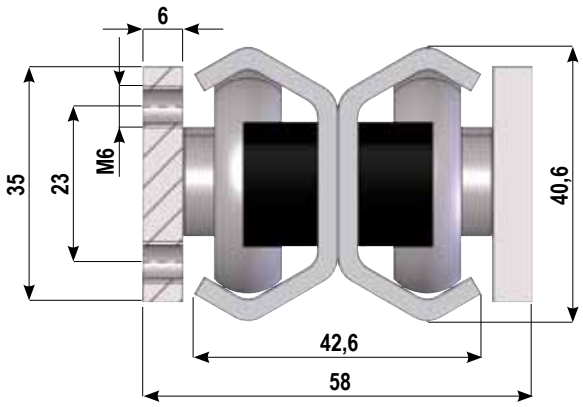

Weight of the 4 sliders: 1,6 kg
Weight of the rail: 3,2 kg/m

Code	Lenght. L (mm)	Stroke H (mm)	Distance sliders M (mm)	T (mm)	Load capacity Co rad (N)	Load capacity Co ax (N)
TQA.40-600	600	600	300	45	991	495
TQA.40-650	650	650	325	70	1043	521
TQA.40-700	700	700	350	95	1087	543
TQA.40-750	750	750	375	120	1125	525
TQA.40-800	800	800	400	145	1157	497
TQA.40-850	850	850	425	170	1113	471
TQA.40-900	900	900	450	195	1059	449
TQA.40-1000	1000	1000	500	245	966	409
TQA.40-1100	1100	1100	550	295	888	376
TQA.40-1200	1200	1200	600	345	821	348
TQA.40-1300	1300	1300	650	395	764	323
TQA.40-1400	1400	1400	700	445	714	302
TQA.40-1500	1500	1500	750	495	670	284
TQA.40-1600	1600	1600	800	545	632	267

The TQAX are complete INOX slides, same dimensions and performances as standard steel version TQAZ . Load capacity indicated for single slide.

**** on demand***

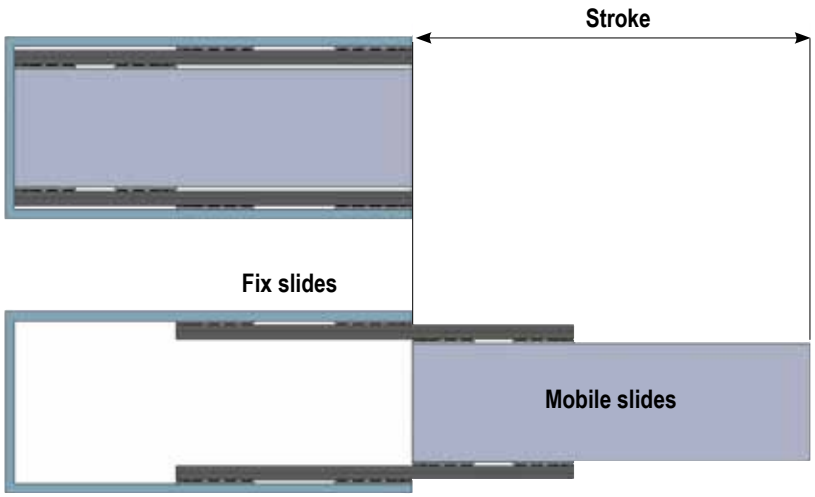

The slide must be installed with the mark "Up-side" facing upwards.
The slides fixed to structure are marked "Fix-slides" while the once fixed to mobile part are marked "Mobile slides" . When used in pair, the same slide can be installed left or right, just by rotating the slide 180degrees horizontally, keeping the mark "Up-side" facing upwards.

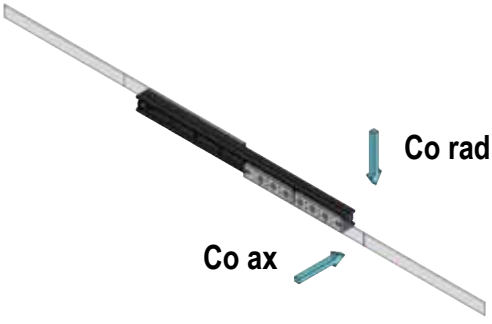

Linear roller slides SF28, SFX28

BALL-CAGE LINEAR RANGE

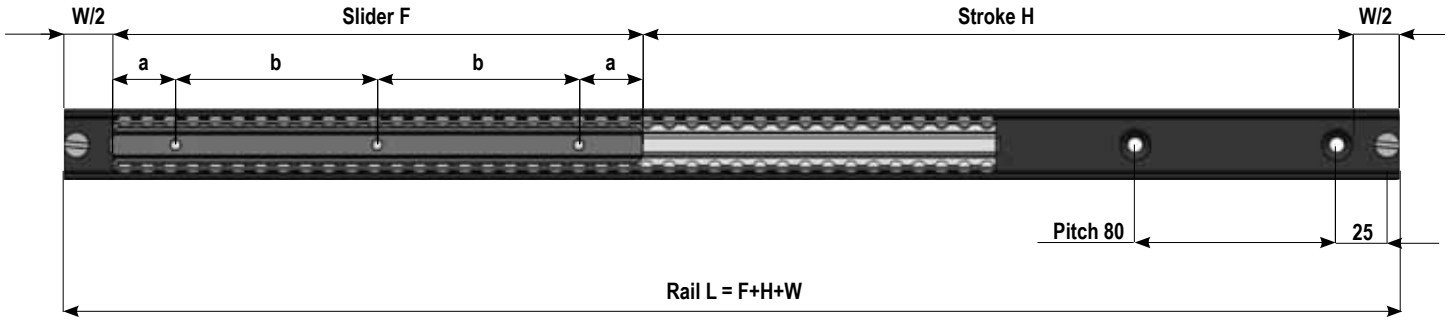

Series SF28

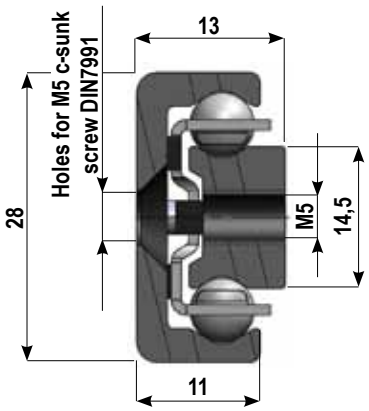

Order code ex.:
SF28-80-250-370

Slider lenght F — Stroke H — Rail lenght L

The SF ball-cage series are a linear bearing with one or more sliders moving in a ball-cage, inside a longer rail. The components are the same as SR.
The product code is obtained, by first selecting the slider length, then based on required stroke, is selected the rail length, according to : L = F+H+W .

Where W is a constant of 40mm for series SF28.

Slider							Weight: 0,7 kg/m		
F (mm)	a (mm)	b (mm)	n° holes	C Dynamic	Co rad (N)	Co ax (N)	Mx (Nm)	My (Nm)	Mz (Nm)
60	10	20	2	3672	3600	2280	26	23	36
80	10	20	3	4896	4800	3040	35	41	64
130	25	80	4	7956	7800	4940	57	107	169
210	25	80	5	12852	12600	7980	93	279	441
290	25	80	6	17748	17400	11020	128	533	841
370	25	80	7	22644	22200	14060	163	867	1369
450	25	80	8	27540	27000	17100	198	1283	2025

Rail				Weight: 1 kg/m
L (mm)	c (mm)	d (mm)	n° fori	w (mm)
130	25	80	2	40
210	25	80	3	40
290	25	80	4	40
370	25	80	5	40
450	25	80	6	40
530	25	80	7	40
610	25	80	8	40
690	25	80	9	40
770	25	80	10	40
850	25	80	11	40
930	25	80	12	40
1010	25	80	13	40
1170	25	80	15	40
1330	25	80	17	40
1490	25	80	19	40
1650	25	80	21	40

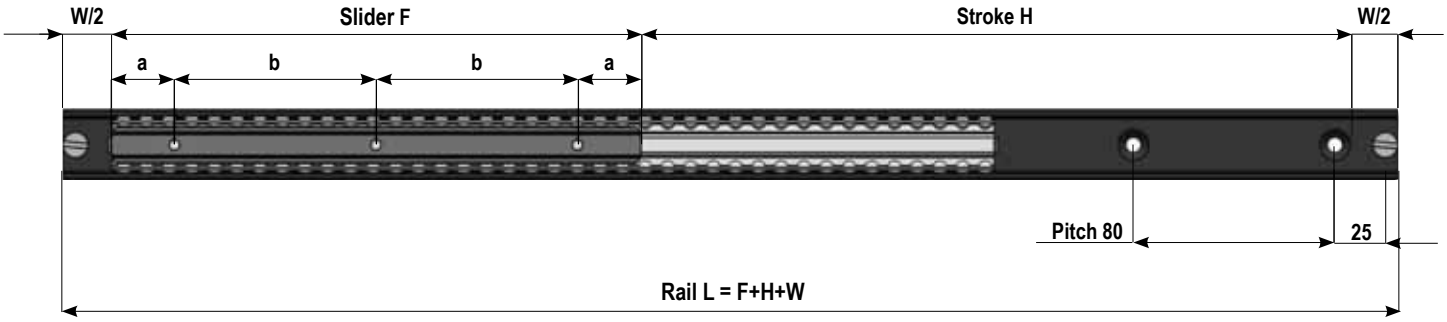

Series SF43

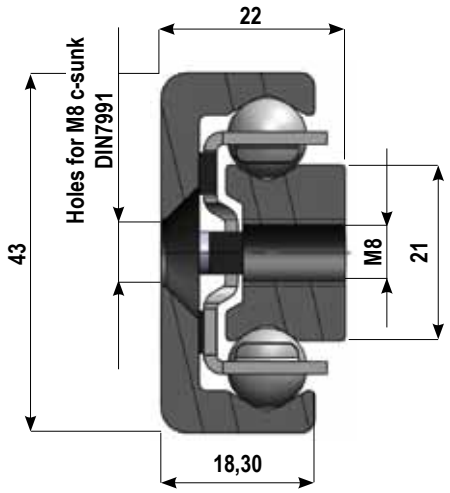

Order code ex.:
SF43-210-350-610

Slider lenght F — Stroke H — Rail lenght L

La serie SF è un cuscinetto lineare formato da uno o più cursori in movimento all'interno di una guida per interposizione di una gabbia a sfere. I componenti sono gli stessi della serie SR, con le medesime eccellenti caratteristiche.
Il codice del prodotto deve essere generato scegliendo la lunghezza F del cursore mobile fra quelli indicati in tabella, quindi in funzione della corsa H deve essere scelta la lunghezza L del guida secondo la seguente relazione: L=F+H+W

Dove W è una costante che per la serie SF43 è pari a 50 mm.

				Slider			Weight: 1,8 kg/m		
F (mm)	a (mm)	b (mm)	n° holes	C Dynamic	Co rad (N)	Co ax (N)	Mx (Nm)	My (Nm)	Mz (Nm)
130	25	80	2	15587	14300	9230	162	200	310
210	25	80	3	25179	23100	14910	262	522	809
290	25	80	4	34771	31900	20590	361	995	1542
370	25	80	5	44363	40700	26270	461	1620	2510
450	25	80	6	53955	49500	31950	561	2396	3713
530	25	80	7	63547	58300	37630	660	3324	5150
610	25	80	8	73139	67100	43310	760	4403	6822

		Rail	Weight: 2,4 kg/m	
L (mm)	c (mm)	d (mm)	n° holes	w (mm)
290	25	80	4	50
370	25	80	5	50
450	25	80	6	50
530	25	80	7	50
610	25	80	8	50
690	25	80	9	50
770	25	80	10	50
850	25	80	11	50
930	25	80	12	50
1010	25	80	13	50
1170	25	80	15	50
1330	25	80	17	50
1490	25	80	19	50
1650	25	80	21	50
1810	25	80	23	50
1970	25	80	25	50

INSTALLATION OF TELESCOPIC SLIDES

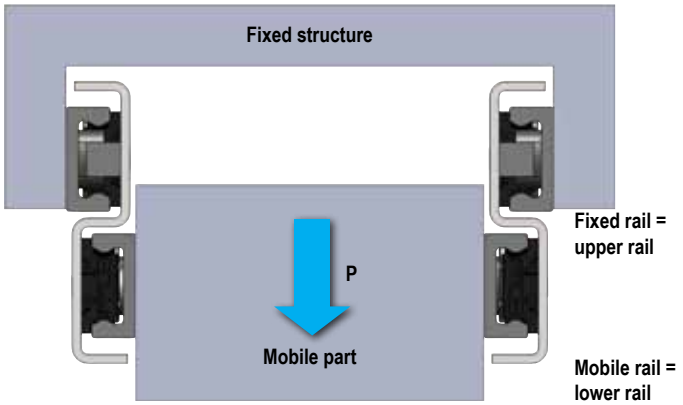

The slides can be mounted in different way, however in general as a configuration "drawer-slides" for horizontal complete extension of a mobile part, compared to a fixed structure.
Except for type TLR, which must be bought as Left-side TLRS and right-side TLRD, all other slides are symmetric, i.e. same version for both left and right side, just by rotating the slides 180degrees.
For all slides of series TLR, TLS, TLA with a vertical intermediate element, the mobile part must always be fixed to the lower rail. The upper rail is identified by the code marking at upper rail (TLR/TLS) or upper part (TLA).

When the mobile part creates a cantilever load and only fixed with 1 slide at its side, it is suggested to use a pair of TLR, TLS, TLA as shown in below figure to better support the overhanging load.

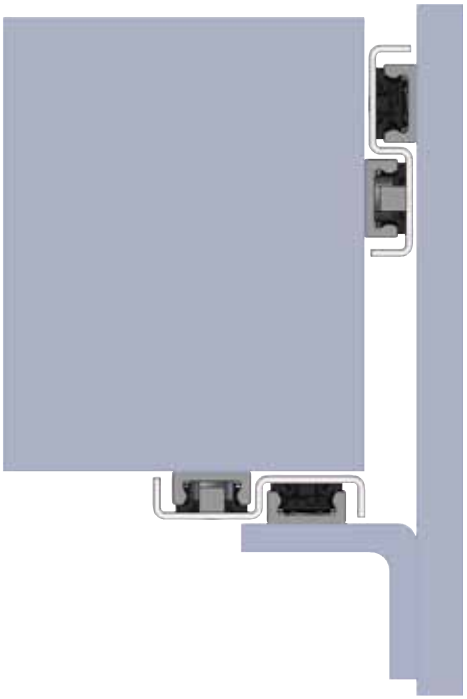

For extensions of mobile parts, like doors or panels, it is suggested to us a TLR, TLS, TLA for upper part, to take the full load. The to cope with lateral oscillation a compact TLQ,TSQ o TQA slide at inferior part.

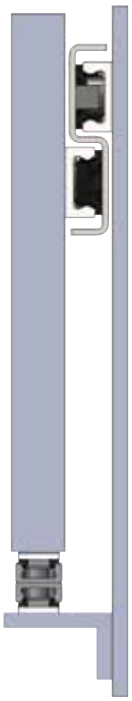

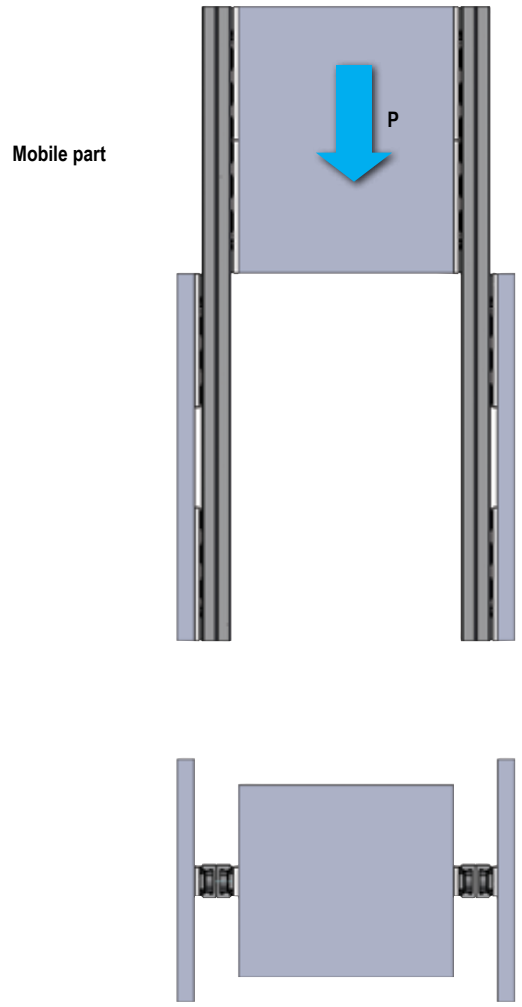

VERTICAL MOVEMENT

For vertical movement is proposed TLQ and TQA slides, with compact dimensions. As the slides in such application generally do not take the load, but only some lateral oscillation, these slides are to be preferred.

For vertical movement are recommended roller slides, while ball-cage slides (TLS, TQS, SR) likely will have some ballcage creeping-problem, as the ballcage tends to move downwards by gravity, creating some minor binding, during upwards extension.

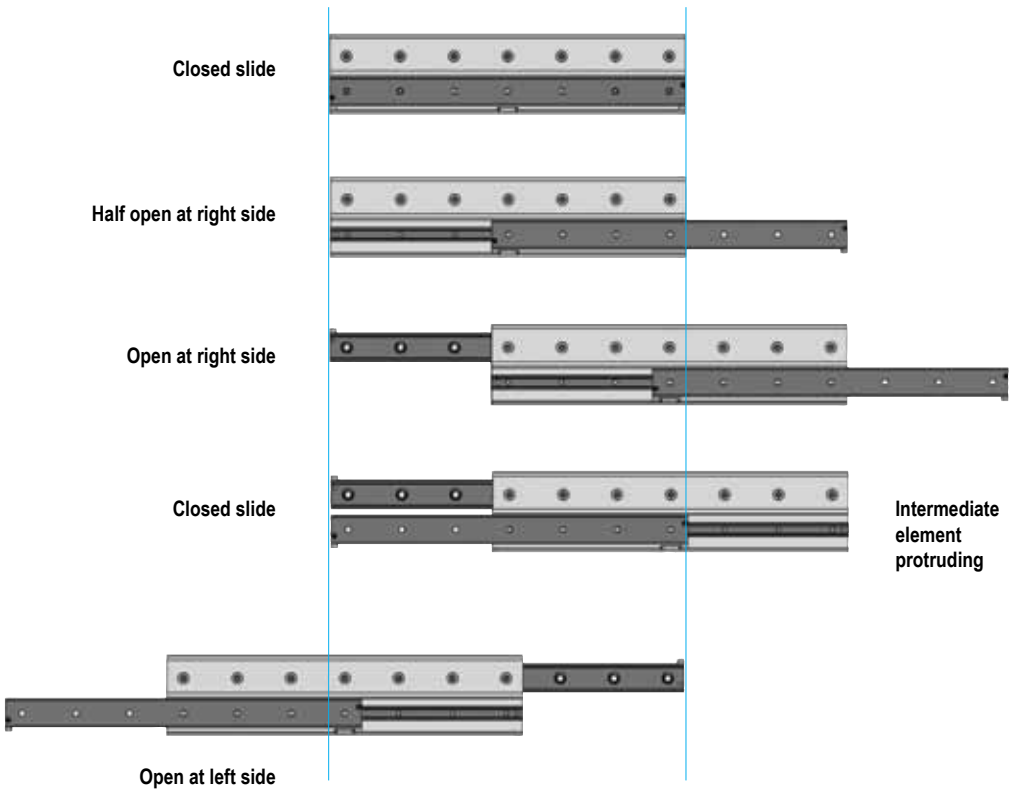

DOUBLE SIDE MOVEMENT

Slides for double side extension (TLS..D / TSQ) allow for extension of the mobile part to both left and right side, the stroke each side equals the length of the slide, less a small constant.

As the movement of the 3 parts, i.e. the two rails and intermediate element is not synvcronized, the intermediate element tends to protrude when closing the slide.
If this is a problem, synchronized slides can be offered, for which the intermediate element precisely follow the movement, as moved by a belt, fixed to upper and lower rail. See page 31.

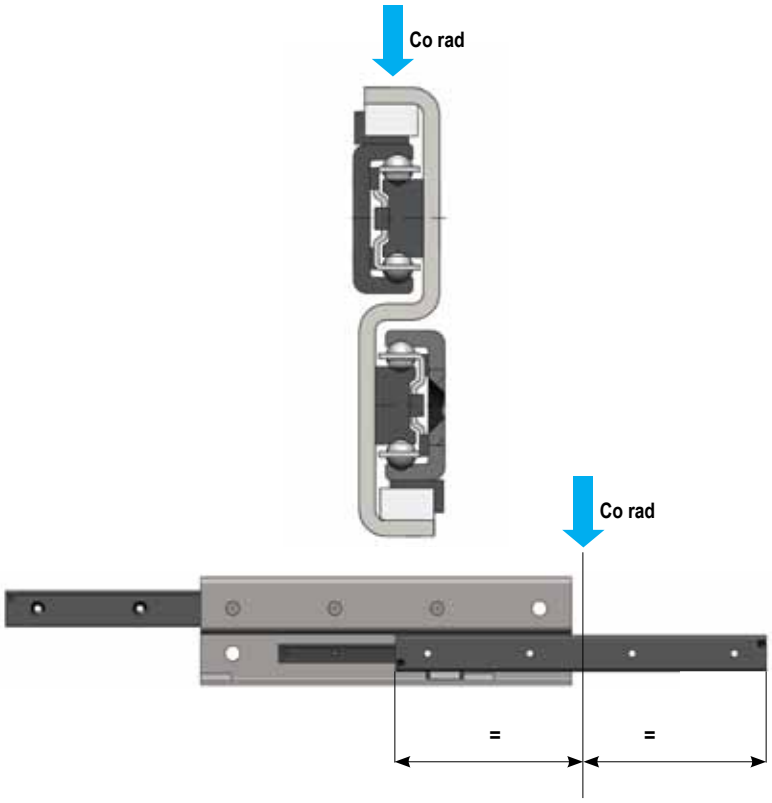

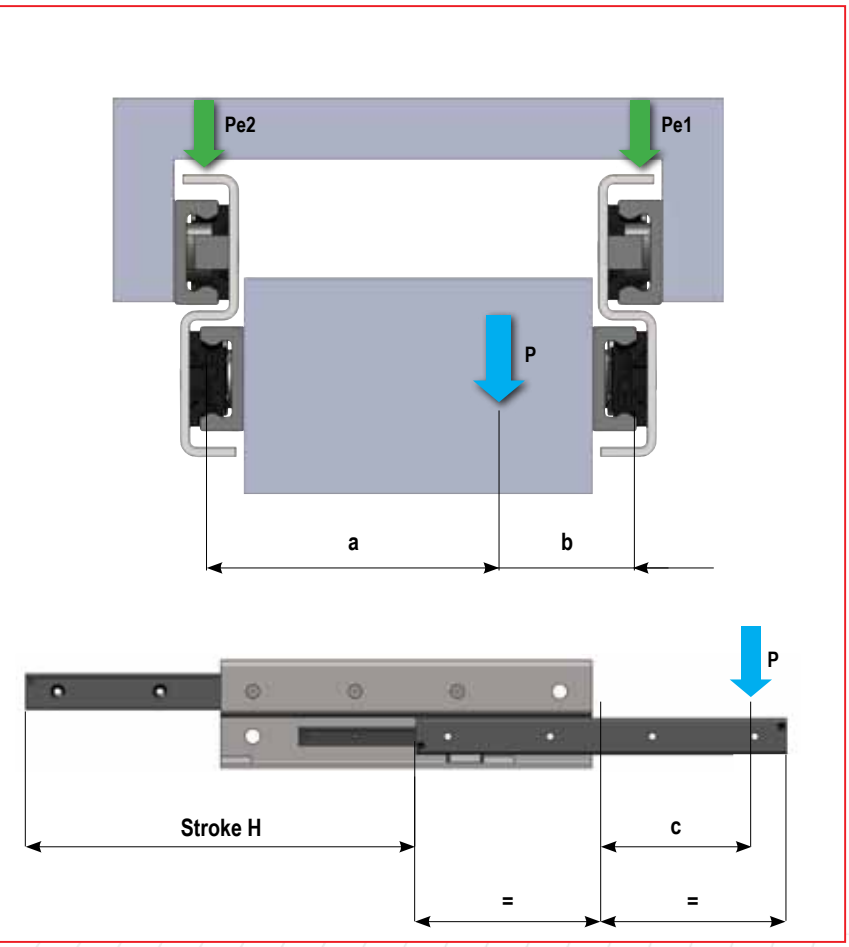

The main factors for sizing the slides for a telescopic movement :

- The weight/forces of mobile part and their position compared to slides.
- Presence of dynamic forces / eventual abuse
- Max. acceptable flexion
- Max. acceptable extraction/closing force of mobile part
- Ambients, frequency, speed
- Expected lifetime

LOAD POSITION

All load capacities Co rad, are indicated per single slide and with the load perfectly centered. I.e an homogeneous load placed between 2 slides. Hereby the load P is acting as a radial point load, at half the extension and in the middle between the 2 slides. The load capacity for a pair is then : **P = 2 • Co rad**

When sizing a telescopic application, it must be carefully evaluated if the load is centered. Too it must be considered if any external dynamic forces, or possible abuse could further increase the load forces acting on the slides.

In case the load isn't centered. i.e. load center Pe1 more towards one of the slides, and/or more towards the tip of the load, the center weighted load must be calculated for the must slides = Pe1 , to be inserted in formula on next page.

$$Pe1 = \frac{(P \cdot a)}{(a + b)} \cdot fp$$

Where :

P = Weight/load of mobile part

a, b = distances from centered load to left/right slide

fp = load position coefficient, based on relation of "c" distance between actual load P and load Co rad position, - compared stroke H .

The coefficient fp is obtained from below diagram. as the ratio between "c/H" .

When only 1 slide the formula is **Pe = P • fp**

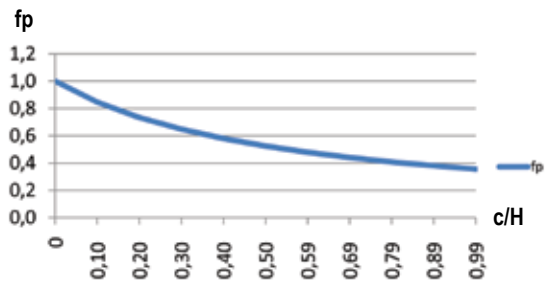

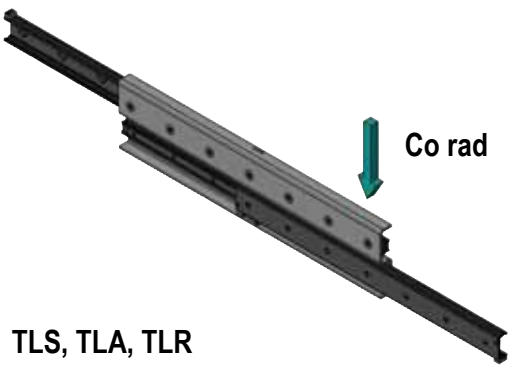

TLS, TLA, TLR

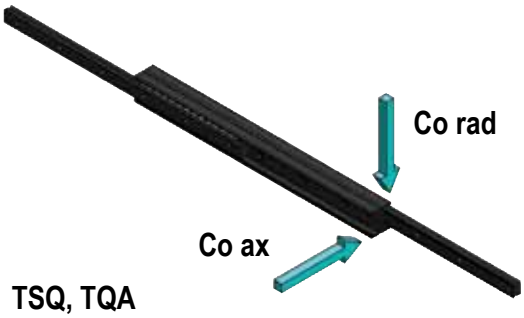

TSQ, TQA

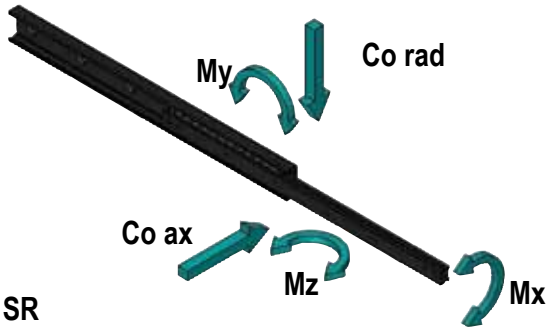

SR

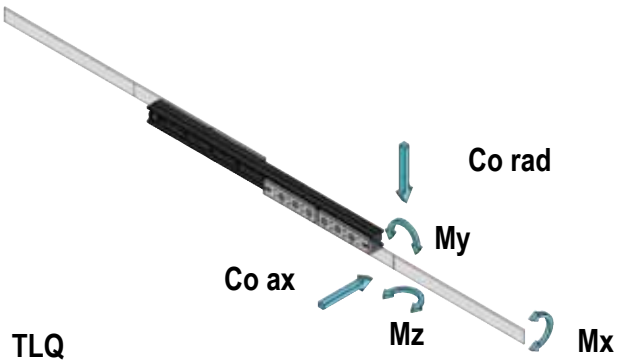

TLQ

To assure a correct selection of the slides according to the slide's load capacity, it is assumed known the different forces acting on the slides, which then must be decomposed in : radial, axial or moment forces. Then again compared to load/moment capacities indicated for each single product in previous pages.

For the slides with intermediate element TLS, TLR, TLA the verification is mainly down to comparing the load capacity Co Rad. to Pe as calculated on previous page, including a safety factor Z .

Pe <= Co rad • Z

Where Z is the safety coefficient as per below table.

Safety coefficient - Z	Application conditions
1 - 1,5	Precise calculation of load/forces, precise assembly and rigid structures
1,5 - 2	Intermediate conditions
2 - 3,5	Roughly estimation of load/forces, not precise and not rigid structures

For slides TSQ and TQA might too include axial loads. The verification includes therefore both axial and radial loads. Once having found Pe axial and radial the formula is :

$$\left(\frac{Pe\ ax}{Co\ ax} + \frac{Pe\ rad}{Co\ rad}\right) <= \frac{1}{Z}$$

SR and full telescopic slides TLQ, the calculation might also includes moments.

$$\left(\frac{Pe\ ax}{Co\ ax} + \frac{Pe\ rad}{Co\ rad} + \frac{Mex}{Mx} + \frac{Mey}{My} + \frac{Mez}{Mz}\right) <= \frac{1}{Z}$$

Where :
Pe rad = applied radial load
Pe ax = applied axial load
Mex, Mey, Mez = applied moments
Co rad = radial load capacity
Co ax = axial load capacity
Mx, My, Mz = moment capacities

Calculation of flexion

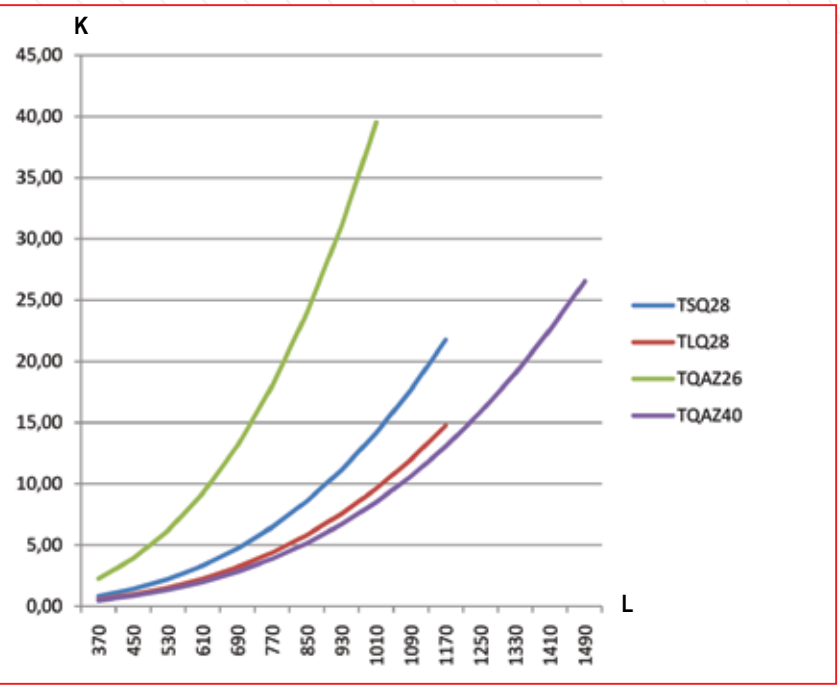

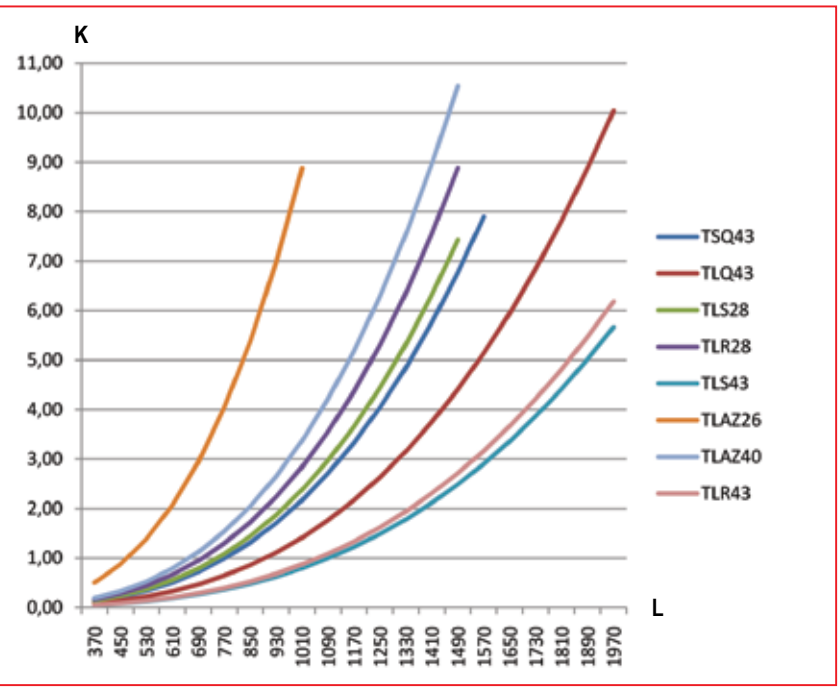

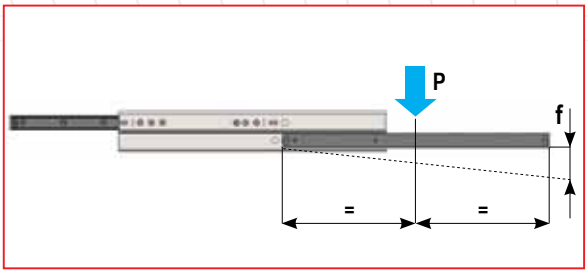

The extended slides have a minor flexion " **f** " in function of applied load P and its own construction. What gives the strength of the slides, are merely the intermediate element's shape. The slides with a long S-shape intermediate element TLS, TLR, TLA allow for much lower flexion, than the compact slides TSQ, TLQ, TQA, even though all base components are identical.

Based on ideal condition and precise assembly, the flexion can be estimate as approximately:

$$f = \frac{(K \cdot P)}{1000}$$

Where :
K = coefficient obtained from graph, in function of slide type and length.
P= applied load as central point, half the extension

For an actual application the flexion is :

$$f = \frac{(K \cdot P)}{1000} + X$$

Where .
Pe = load force calculated as according to its position
X = external factors as : rigidity and precision of mobile structure and fixed structure.

EXTENSION & CLOSING FORCES

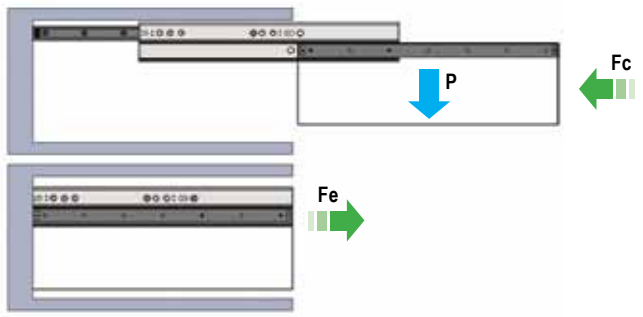

The required force Fe to extend the applied load, is determined by the friction of the slide's rolling components and applied load Pe is: **Fe ≈ 0,01 • P**

The required force Fc to close the applied load is:

$$Fc = 2 \cdot P \cdot \frac{f}{H}$$

Where :
P = radial load applied on single rail
f = calcolated flexion (page 28)
H = stroke of slide
For applications with 2 slides, with even load the force is x 2 . In addition their might be some additional "binding friction" from not precise assembly. For applications requiring lowest extension/closing forces is recommended roller slides series TLR and TLQ .

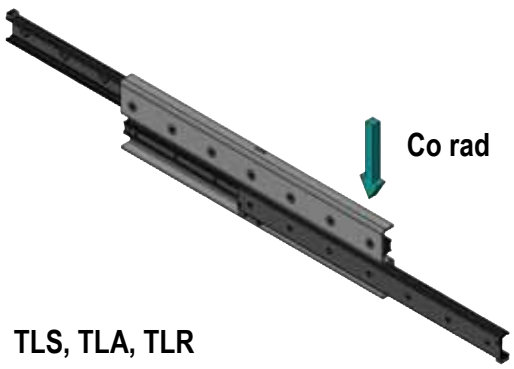

TLS, TLA, TLR

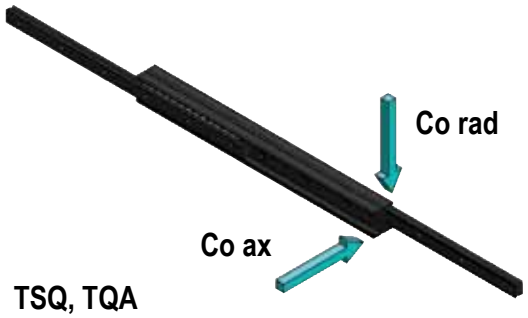

TSQ, TQA

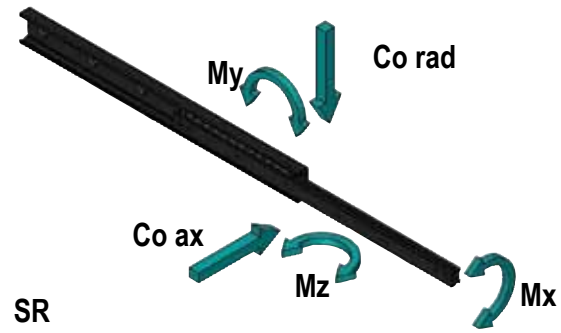

SR

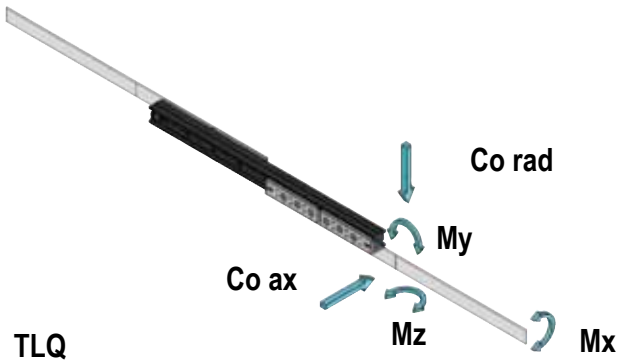

TLQ

Where :
Pe rad= applied radial load
Pe ax= applied axial load
Mex, Mey, Mez = applied moments
Co rad= radial load capacity
Co ax= axial load capacity
Mx, My, Mz = moment capacities

The slides TQA/X and TLA/X is expected to reach approx. 100.000 cycles, with a load of 70% of max load capacity.

The lifetime of the telescopic slides, intended as the number of opening/closing cycles, the slide can perform, without any notable wear of raceways or rolling components to compromize as smooth precise movement, can be roughly be estimate as :

$$Lcy = fa \cdot 50 \cdot \left(\frac{C}{P}\right)^3 \cdot \frac{1}{H} \cdot 10^6$$

Where:
Lcy = number of complete cycles
C= dynamic load coefficient, according to tables for each product
P=applied load on each single slide, central position
H = actual stroke
Fa = operation coefficient according to below table

Coefficient fa	Operating condistions
0,7-1	Correct load sizing, rigid structures, constantgood lubrication, clean ambient
0,3-0,7	Intermediate conditions
0,05-0,3	Approximative load sizing, unprecise non rigid structures, dusty not clear ambient

The actual lifetime is much depending of constant good lubrication of the raceways. Without good constant librucation and/or in very dusty ambients the actual lifetime expectations can be much reduced.

Calculation of load P to be used for Lifetime calculation

The load P to be used in below formular is refred to single slide, with load in the centre. If used in pair, load on each single slide must be calculated, see page 26-27 for further info.

The slides TSQ and TQA can be used with both radial and axial loads. In this case P, is substituted by Pe, to include axial load in the Lifetime formular.

$$Pe = Co\ rad \cdot \left(\frac{Pe\ rad}{Co\ rad} + \frac{Pe\ ax}{Co\ ax}\right)$$

The slides TLQ and SR might too include moments Mex, Mey and Mez, in addition to radial and axial loads. The formular in case of monents is

$$Pe = Co\ rad \cdot \left(\frac{Pe\ rad}{Co\ rad} + \frac{Pe\ ax}{Co\ ax} + \frac{Mex}{Mx} + \frac{Mey}{My} + \frac{Mez}{Mz}\right)$$

SPEED LIMITATION

TELESCOPIC SLIDES RANGE

The speed of the slides is Il limited by strength of the stoppers , which move the intermediate element along with each opening/closing of the slides. The critical point is the impact, when stopper in rail hit the stopper in intermediate element. The stoppers are different among type of slides, but the same for all lengths of same slide. As the impact force, increase with the lenght og slides, based on same speed, as the weight of intermdiate element increase propotional with the increased lengths, the max impact the stoppers can absorb is :

$$Ek=m \times V$$

Where : m = weight of element
v = Speed of slide

Hereby short slides can operate at faster speed than long slides.

The roller telescopic slides TLR, TLQ , TLA and TQA strong impact stoppers, to provide the higest speed. The speed range is from 1m/s for the shorter slides to 0,2m for the longest slides. Besides higest speed, the roller telescopics are too the most silent and smooth moving slides due to the roller.
The strong ball-cage slides TLS offer a speed range of 0,8m/s for shorter slides to 0,2m/s for the longest slides.
The TSQ and SR slides are without any rubber inserts, just square pins, so metal aginst metal impact. The speed range is hereby lower; 0,6m/2 for shorter slides to 0,1m/s for max. lengths.

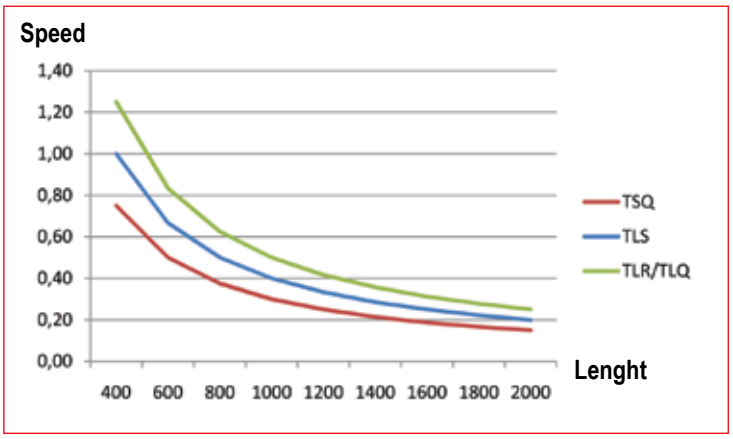

MATERIALS AND TREATMENTS

The rails, except TLAZ-TLAX-TQAZ-TQAX slides are hardened steel profiles with T RACE NOX treatment, to provide a hardened surface, min 58HRC on all surfaces, an overall high corrosion resistance of the entire profile. The treatment provide unique long lasting telescopics slides, - even for severe high frequency application and corrosive ambientss. The T RACE NOX treatment is made in 3 steps :

1) High-dept nitriding hardening
2) Black oxsidation
3) Impregnation in protective black mineral oil

The T RACE NOX treatment is done on the complete profile, leaving the rail a smooth matt black finish.

Materials	TLR	TLQ	TLR.X	TLQ.X	TLS	TSQ	TLS.X	TSQ.X	TLAZ	TQAZ	TLAX	TQAZ
Rails/ Profiles	Nitriding hardened steel, black (T RACE-NOX)				Nitriding hardened steel, black (T RACE-NOX)				Bright zink plated steel		INOX steel AISI 303	
Intermediate element	Bright zink plated steel	no	INOX steel AISI 303	no	Bright zink plated steel	no	INOX steel AISI 303	no	Bright zink plated steel	no	INOX steel AISI 303	no
Rotelle/ sfere	Core hardened 100Cr6 steel		Core hardened INOX steel AISI 440		Core hardened 100Cr6 steel		Core hardened INOX steel AISI 440		Core hardened 100Cr6 steel		Core hardened INOX steel AISI 440	
Rollers / balls	no				Bright zink plated steel		INOX steel AISI 303					
Wipers	Polycarbonate elastomer				no				no	no	no	no
Lubricant spunch	Sintetic fibre with litium grease				no				no	no	no	no
Screws	Zink plated steel		INOX steel		Zink plated steel		INOX steel		INOX steel		INOX steel	
Element stoppers	Zink plated steel - Nitrilic rubber		Zink plated steel - Nitrilic rubber		Zink plated steel - Nitrilic rubber	INOX steel	Zink plated steel - Nitrilic rubber	INOX steel	INOX steel - Nitrilic rubber			
Roller seals	(Type 2RS) Neopren				no				(Type 2Z) Zink plated steel		(Type 2RS) Neopren	
Inner bearing ball-cage	Poliammide				no				Zink plated steel		Poliammide	

OPERATING TEMPERATURE

The limitation of operating temperature is mainly based on a few plastic/rubber components.
The slides TLS, TLQ, TLR, TLA e TQA may operation in a temperature range from -20 to +110°C.
The slides SR and TSQ which are without any plastic/rubber components may function properly even with temperature of 300°C as non property alteration of the nitriding hardened steel. Too possible with TLS slides, when removing the rubber stoppers , and used for slow speed applications.

ON-REQUEST SPECIAL VERSIONS AND ACCESSORIES

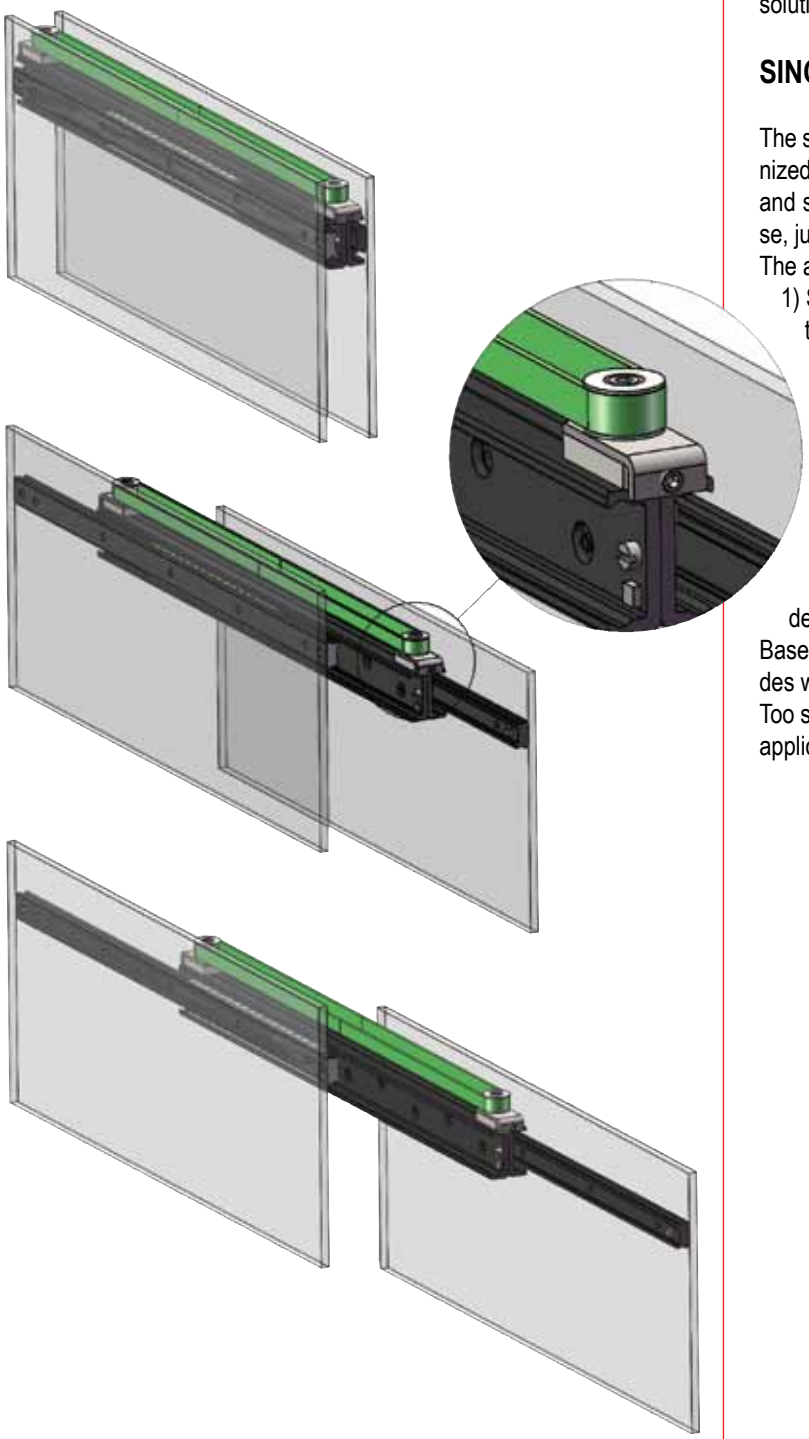

For OEM applications, T RACE's Technical Dept, do design complete customized telescopic slides to perform to specific demands, otherwise some standard accessories made on request, may provide the right solution for some application requiring extra features :

SINCRONIZATION OF THE INTERMEDIATE ELEMENT

The standard slides TLR, TLS, TSQ e TLQ can be provided as synchronized slides. The synchronization is obtained by mounting of pulleys and strong belt fixed to standard slides. Hereby the slide will open/close, just by acting on the intermediate element.
The advantages of this synchronization feature are :

1) Solve the problem of protruding element for double stroke applications with TSQ and TLS..D slides. See page 25
2) Synchronized slides can reach max. speed 100% higher than standard version, as no impacts with intermediate element, ref. Page 30 .
3) Very silent movement.
4) Possible to implement in high frequency telescopic applications, or automation at high speed.

Alternatively too possible to provide synchronized telescopic slides with "Rack & Pinion" movement.
Based on customized intermediate elements, like below, telescopic slides with much higher load capacities can be obtained.
Too slides with high rigidity in all directions for severe load conditions or applications demanding minimal flexion.

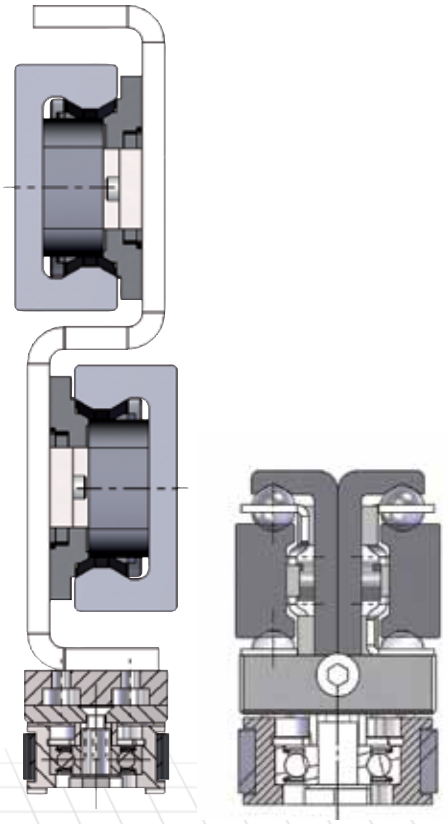

STRONG DAMPING END STOPPERS

The use of telescopic slides require strong external movement end-stoppers, as the incoporporated stoppers in all T RACE's sliders are solely designed to drag along the intermediate element, during opening/closing of the slides.
The dimensioning of external stoppers, depends on the total weight of mobile part and the speed of which it is being moved.
T RACE's additional 8 end-stoppers provide and an easy solution for good movement end-stoppers, which too are fast to install. The solution is based on 8 parts fixed, for which 4 are fixed to the intermediate element and remaining 4 installed on fixed and mobile structure. The shape of the strong rubber too provide a high damping property.
The advantages are :

1) The end-stopper system assures full stroke of the slide, unlike stopping system installed after on mobile and fixed structure. Such non-TRACE solutions tend to reduce full stroke with 30-60mm .

2) The end-stopper system provides a smooth and silent stopping at the reach of full extraction and closing, - elimination any metalic sound. at in impact.

For further technical data and dimensions, please contact T RACE's Technical dept.

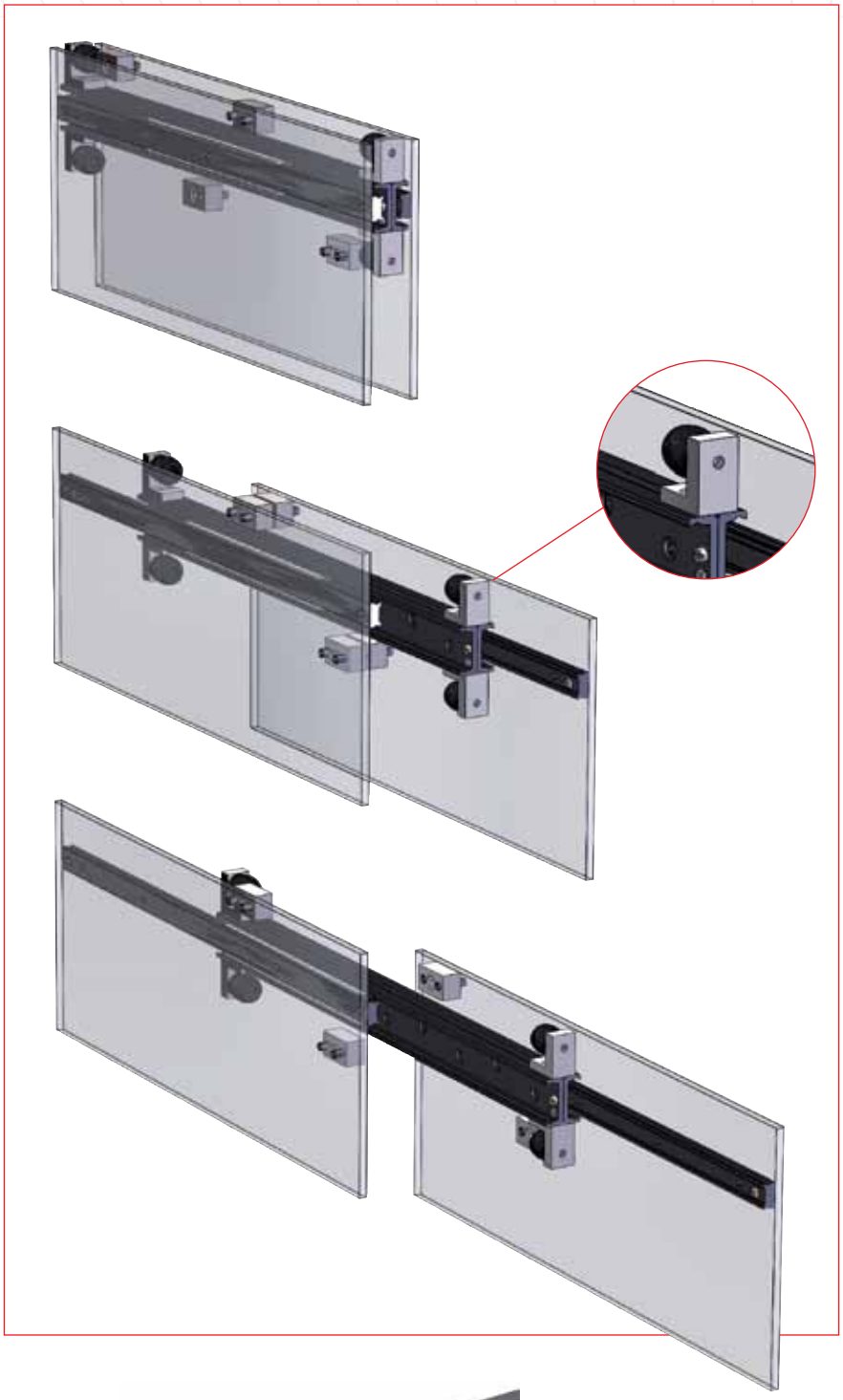

BLOCKING DEVICE FOR CLOSED POSITION

The telescopic slides TLS and TLR can include strong blocking device for closed position. When closing, the mechanism fixed at mobile part, force the robust spring-loaded pin to enter the upper rail, fixed to structure, to hereby assure a strong and safe blocking of the mobile part. To release the blocking, the handle is manually pressed down.
For further data and dimensions, please contact T RACE's Technical dept.

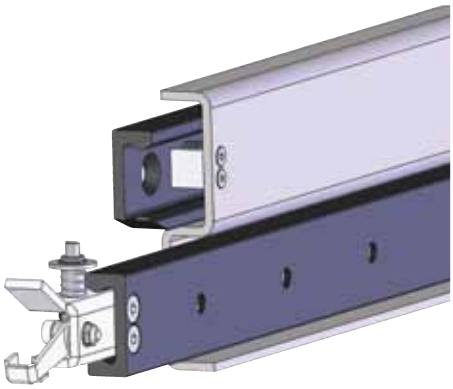

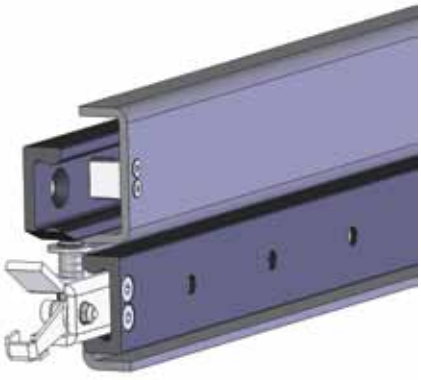

DATI RICHIEDENTE / REQUESTED BY:

FAX T-RACE +39 039 6817217

Nome / Name: ..... Cognome / Surname: .....

Mansione svolta / Position: ..... Società / Company: .....

Indirizzo / Address: .....

Tel.: ..... Cell: ..... Fax: ..... E-mail: .....

DATI GEOMETRICI / GEOMETRICAL DATA:

Lunghezza parte mobile M [mm] / Length of mobile part M (mm): .....

Lunghezza parte fissa F [mm] / Length of fix structure F (mm): .....

Corsa S [mm] / Stroke S (mm): .....

Distanza tra le guide I [mm] / Distance between the rails (mm): .....

Distanza tra l'asse delle guide e l'azionamento D [mm] / Distance between rails and drive axis D (mm): .....

Ingombro massimo ammesso [mm] / Max. permitted space for rails (mm): .....

Altre lunghezze ritenute significative [mm] / Other lengths of eventual importance (mm): .....

SCHEMA / APPLICATION DRAWING:

CARICHI APPLICATI / APPLIED LOADS:

Forze applicate [N] / Applied forces (N): F_1 ..... F_2 ..... F_3 ..... F_4 .....

Momenti applicati [Nm] / Applied moments (Nm): M_1 ..... M_2 ..... M_3 ..... M_4 .....

Indicazione punto di applicazione [mm] / Position-point of applied force (mm): D_1 ..... D_2 ..... D_3 ..... D_4 .....

TIPO DI MOVIMENTAZIONE / TYPE OF MOVEMENT:

Tipo di azionamento / Type of drive movement: .....

Velocità massima [m/s] / Max speed (m/s): .....

Accellerazione massima [m/s] / Max acceleration (m/s): Lungo X / axis X ..... Lungo Y / axis Y ..... Lungo Z / axis Z .....

Numero di cicli [Hz] / Number of cycles (Hz): .....

Tempo di movimento [s] / Time of movement [s]: .....

Tempo di stop [s] / Time of stop [s]: .....

CONDIZIONI AMBIENTALI / AMBIENT CONDITIONS:

Temperatura di esercizio [C°] / Working temperature (°C): .....

Polverosità ambientale / Environment dust/clearness: .....

ALTRI DATI / OTHER DATA:

Intervallo di lubrificazione-manutenzione [h o gg] / Lubrication/maintenance interval (h/d): .....

Livello di rumorosità [dB] / Level of noise [dB]: .....

Durata minima richiesta [km/anni/cicli] / Request life-time (km/years/circles): .....

Quantità [pz] / Quantity yearly/batches (pieces): .....